ST. ANDREW PARISH HALL

Sumner, WA

PROJECT MANUAL

RMC Architects, PLLC
1223 Railroad Avenue
Bellingham, WA 98225

(360) 676-7733
rmc@rmcarchitects.com

February 2020

SECTION 00 00 02 - PROJECT TEAM LIST

Owner	Corp. of the Catholic Archbishop of Seattle, a Corporation Sole 710 9th Avenue Seattle, WA 98104 T 206-382-4266	Ed Foster Director Property & Construction edf@seattlearch.org
Parish	St. Andrew Catholic Church 1401 Valley Avenue East Sumner, WA 98390 Rev. Jerry Burns Christine Tapec (Parish Admin) Thomas Magnan Carl Jones (Comm. Chair) T 253-863-2253	 frjerry@standrewsumner.org christine@standrewsumner.org thomas.magnan@Magnanconsulting.com carlofsumner@gmail.com
Architect	RMC Architects, pllc 1223 Railroad Avenue Bellingham, WA 98225 T 360-676-7733	Brad Cornwell brad.c@rmcarchitects.com Allison Ross allison.r@rmcarchitects.com
General Contractor	Hilger Construction 10905 25th Avenue East Tacoma, WA 98445 T 253 584 4766	Nick Hilger nick.hilger@hilgerconstruction.com David Mack david.mack@hilgerconstruction.com
Civil Engineer	Freeland & Associates, Inc. 220 W. Champion Street, Suite 200 Bellingham, WA 98225 T 360 650-1408	Inga Drechsel idrechsel@freelandengineering.com
Structural Engineer	PCS Structural Solutions 1250 Pacific Avenue, Suite 701 Tacoma, WA 98402 T 253 383 2797	Don Scott, PE dscott@pcs-structural.com
Mechanical Engineer	Hultz/BHU 1111 Fawcett Avenue, Suite 100 Tacoma, WA 98402 (PO BOX 1243, Tacoma, 98401) T 253 383 3257	Nick Hultz nickh@hultzbhu.com

Electrical Engineer	Hultz/BHU 1111 Fawcett Avenue, Suite 100 Tacoma, WA 98402 (PO BOX 1243, Tacoma, 98401) T 253 383 3257	Scott Mallory scottm@hultzbhu.com
Kitchen Consultant	Bargreen Ellingson 6626 Tacoma Mall Blvd Tacoma, WA 98409 T 253 471 3791	Karl Sawyer ksawyer@bargreen.com Joshua Pearce jpearce@bargreen.com
Landscape Architect	Freeland & Associates 2200 W Champion St #200 Bellingham, WA 98225 T 360 650 1408	Scott Riggins sriggins@freelandengineering.com
Geotech	Geotech Engineers, INC. 1101 Fawcett Ave Suite 200 Tacoma, WA 98402 T 253 722 2446	Dennis J. (DJ) Thompson, PE
Plan Review	Magnan Consulting 12423 151st Ave E Puyallup, WA 98374 T. 253-840-4020	Thomas Magnan

End of Section

SECTION 00 01 10 - TABLE OF CONTENTS

DIVISION 00 - PROCUREMENT AND CONTRACTING REQUIREMENTS

DIVISION 01 - GENERAL REQUIREMENTS

DIVISION 02 – EXISTING CONDITIONS

DIVISION 03 – CONCRETE

DIVISION 04 – MASONRY

DIVISION 05 – METALS

DIVISION 06 – WOOD, PLASTICS, AND COMPOSITES

DIVISION 07 – THERMAL AND MOISTURE PROTECTION

DIVISION 08 – OPENINGS

DIVISION 09 – FINISHES

DIVISION 10 – SPECIALTIES

DIVISION 11 – EQUIPMENT

DIVISION 12 – FURNISHINGS

DIVISION 13 – 19: NOT USED

DIVISION 20 – GENERAL MECHANICAL

DIVISION 21 – FIRE SUPPRESSION

DIVISION 22 – PLUMBING

DIVISION 23 – HEATING, VENTILATING, AND AIR CONDITIONING (HVAC)

DIVISION 26 - ELECTRICAL

DIVISION 27 – COMMUNICATIONS

DIVISION 28 – ELECTRONIC SAFETY AND SECURITY

DIVISION 31 – NOT USED

DIVISION 32 – EXTERIOR IMPROVEMENTS

DIVISION 33 – UTILITIES

END OF SECTION

SECTION 00 01 15 - LIST OF DRAWING SHEETS

GENERAL Dated 7 February 2020

G001	COVER SHEET
G002	PROJECT AND CODE INFORMATION

CIVIL Dated 7 February 2020

C1	COVER SHEET
C2	EXISTING CONDITIONS
C3	TEMORARY EROSION & SEDIMENTATION CONTROL PLAN (TESC OVERVIEW)
C4	TEMORARY EROSION & SEDIMENTATION CONTROL PLAN
C5	TESC DETAILS AND NOTES
C6	STORMWATER POLLUTION PREVENTION PLAN (SWPPP)
C7	SITE PLAN (OVERVIEW)
C8	DRAINAGE PLAN
C9	GRADING PLAN – NORTH
C10	GRADING PLAN – SOUTH
C11	SEWER, WATER, & FIRE PLAN
C12	PAVING DETAILS AND ROADWAY NOTES
C13	PAVING AND DRAINAGE DETAILS
C14	DRAINAGE DETAILS AND STORMWATER PLAN NOTES
C15	STORMWATER DETENTION POND SECTION AND FLOW CONTROL DETAILS
C16	STORMWATER DETENTION POND AND TREATMENT DETAILS
C17	SANITARY SEWER DETAILS AND SEWER SYSTEM NOTES
C18	WATER AND FIRE PROTECTION DETAILS AND WATER SYSTEM NOTES
C19	FIRE PROTECTION DETAILS

LANDSCAPE Dated 7 February 2020

L1	LANDSCAPE PLAN (NORTH)
L2	LANDSCAPE PLAN (SOUTH)
L3	PARKING LOT AND BUILDING PLANT LAYOUT PLAN
L4	LANDSCAPE DETAILS AND NOTES

ARCHITECTURAL Dated 7 February 2020

A001	ASSEMBLIES
A100	EXISTING SITE PLAN
A101	SITE PLAN
A102	SITE DETAILS
A201	FLOOR PLAN
A202	ROOF PLAN
A210	REFLECTED CEILING PLAN
A301	BUILDING ELEVATIONS
A302	BUILDING ELEVATIONS
A311	BUILDING SECTIONS
A312	BUILDING SECTIONS
A313	BUILDING SECTIONS
A321	WALL SECTIONS
A322	WALL SECTIONS

A501	EXTERIOR DETAILS
A601	ENLARGED PLANS AND INTERIOR ELEVATIONS
A602	INTERIOR ELEVATIONS
A603	INTERIOR ELEVATIONS
A801	WINDOW AND DOOR TYPES AND SCHEDULES
A802	ROOM FINISH PLAN AND SCHEDULE

KITCHEN (FOR REFERENCE ONLY)

K1	FOOD SERVICE EQUIPMENT PLAN

STREET LIGHTING (FOR REFEENCE ONLY)

PSE1	STREET LIGHT ANALYSIS
PSE2	STREET LIGHT ANALYSIS

STRUCTURAL Dated 7 February 2020

S001	GENERAL NOTES
S002	GENERAL NOTES
S003	GENERAL NOTES
S004	GENERAL NOTES
S101	FOUNDATION PLAN
S102	ROOF FRAMING PLAN
S201	FOUNDATION DETAILS
S301	FRAMING DETAILS
S302	FRAMING DETAILS
S303	FRAMING DETAILS
S304	FRAMING DETAILS

MECHANICAL Dated 7 February 2020

M001	MECHANICAL LEGEND & NOTES
M002	MECHANICAL NOTES
M003	MECHANICAL SCHEDULES
M201	FOUNDATION PLAN
M301	PLUMBING PLAN
M302	PLUMBING DETAILS
M303	PLUMBING DETAILS
M401	HVAC PLAN
M402	ROOF PLAN
M403	MECHANICAL DETAILS
M404	MECHANICAL DETAILS

ELECTRICAL Dated 7 February 2020

E001	LEGEND, ABBREVIATIONS, AND NOTES
E101	ELECTRICAL SITE PLAN
E201	LIGHTING PLAN
E301	POWER AND LOW VOLTAGE ROUGH-IN PLAN
E501	ELECTRICAL ONE-LINE DIAGRAM

END OF SECTION

SECTION 00 21 00 - INSTRUCTIONS TO BIDDERS

PART 1 - GENERAL

1.01 BID SUMS

A. The sum of money shown on the bids to cover all work included in base bid, together with any Addenda thereto, unit prices called for, or for any alternates called for, and shall include all items of labor, material, equipment, overhead and compensation, to complete all of the work under each particular heading.

1.02 PAYMENT AND PERFORMANCE BOND

A. The successful bidder will be required to execute said contract, and furnish a 100% payment and performance bond, satisfactory to the Owner, within ten (10) days after receiving from the Owner properly prepared contract documents. If the successful bidder, upon acceptance of its bid by Owner within the period specified for acceptance, fails to execute all Contract Documents or give a bond as required within the time specified, Owner may reject the bid.

PART 2 - PRODUCTS (Not Used)

PART 3 - EXECUTION (Not Used)

END OF SECTION

SECTION 00 41 00 - BID FORMS

The following documents are attached to this section:

- Bid Form
- Bid Bond Sample, AIA Document A310-2010

END OF SECTION

BID FORM

St. Andrew Catholic Church
1401 Valley Avenue East
Sumner, WA 98390

To whom it may concern:

Having carefully examined the General Conditions, Drawings, and Specifications entitled **St. Andrew Parish Hall**, Drawings dated _____and Project Manual dated _____and the Addenda numbered _____, as well as the premises and the conditions affecting the Work, the Undersigned proposes to provide each unit of Work for the Stipulated Sums as set forth below: Applicable Washington State Sales Tax is not included in the bid and will be added to each progress payment request.

BASE BID

_____ Dollars ($_____)

ALTERNATE BIDS: The undersigned proposes to perform work called for in the following alternates as described in the Contract Documents, for the following resulting additions to or deductions from the Basic Bid. Indicate whether each proposed lump sum is additive to or deductive from the Basic Bid:

Alt. #1
☐ Add ☐ Deduct dollars ($_____)

Alt. #2
☐ Add ☐ Deduct dollars ($_____)

Alt. #3
☐ Add ☐ Deduct dollars ($_____)

The Undersigned agrees to pay the Owner as liquidated damages the sum of $_____ per calendar day for the first 30 calendar days and $_____ per calendar day thereafter for each consecutive calendar day that is in default after the Contract Time. Liquidated damages shall be deducted from the contract by change order.

If the Undersigned is notified of the acceptance of this Bid within thirty calendar days of the time set for opening of the Bid, the Undersigned agrees to execute a Contract for the above Work for the above-stated compensation in the form of the Contract attached hereto and to commence Work within ten days after the execution thereof.

The Undersigned agrees if awarded the Contract, to complete it within _____ calendar days after the Notice to Proceed.

Very truly yours,

_____

_____

_____

Washington License No: _____

Date: _____

AIA® Document A310™ – 2010

Bid Bond

CONTRACTOR:
(Name, legal status and address)

SURETY:
(Name, legal status and principal place of business)

This document has important legal consequences. Consultation with an attorney is encouraged with respect to its completion or modification.

Any singular reference to Contractor, Surety, Owner or other party shall be considered plural where applicable.

OWNER:
(Name, legal status and address)

BOND AMOUNT:

PROJECT:
(Name, location or address, and Project number, if any)

The Contractor and Surety are bound to the Owner in the amount set forth above, for the payment of which the Contractor and Surety bind themselves, their heirs, executors, administrators, successors and assigns, jointly and severally, as provided herein. The conditions of this Bond are such that if the Owner accepts the bid of the Contractor within the time specified in the bid documents, or within such time period as may be agreed to by the Owner and Contractor, and the Contractor either (1) enters into a contract with the Owner in accordance with the terms of such bid, and gives such bond or bonds as may be specified in the bidding or Contract Documents, with a surety admitted in the jurisdiction of the Project and otherwise acceptable to the Owner, for the faithful performance of such Contract and for the prompt payment of labor and material furnished in the prosecution thereof; or (2) pays to the Owner the difference, not to exceed the amount of this Bond, between the amount specified in said bid and such larger amount for which the Owner may in good faith contract with another party to perform the work covered by said bid, then this obligation shall be null and void, otherwise to remain in full force and effect. The Surety hereby waives any notice of an agreement between the Owner and Contractor to extend the time in which the Owner may accept the bid. Waiver of notice by the Surety shall not apply to any extension exceeding sixty (60) days in the aggregate beyond the time for acceptance of bids specified in the bid documents, and the Owner and Contractor shall obtain the Surety's consent for an extension beyond sixty (60) days.

If this Bond is issued in connection with a subcontractor's bid to a Contractor, the term Contractor in this Bond shall be deemed to be Subcontractor and the term Owner shall be deemed to be Contractor.

When this Bond has been furnished to comply with a statutory or other legal requirement in the location of the Project, any provision in this Bond conflicting with said statutory or legal requirement shall be deemed deleted herefrom and provisions conforming to such statutory or other legal requirement shall be deemed incorporated herein. When so furnished, the intent is that this Bond shall be construed as a statutory bond and not as a common law bond.

Signed and sealed this day of

	(Contractor as Principal) *(Seal)*
(Witness)	*(Title)*
	(Surety) *(Seal)*
(Witness)	*(Title)*

CAUTION: You should sign an original AIA Contract Document, on which this text appears in RED. An original assures that changes will not be obscured.

Init.

/

SECTION 00 52 00 - AGREEMENT FORM

PART 1 - GENERAL

A. The “Standard Form of Agreement Between Owner and Contractor where the basis of payment is a Stipulated Sum,” AIA Document A101, 2017 Edition, as amended by the Archdiocese of Seattle, is a part of these Contract Documents and is incorporated as fully as if bound herein.

END OF SECTION

SECTION 00 72 00 - GENERAL CONDITIONS

PART 1 – GENERAL

A. The “General Conditions of the Contract for Construction,” AIA Document A201, 2017 Edition, as amended is a part of these Contract Documents and is incorporated as fully as if bound herein.

END OF SECTION

SECTION 01 10 00 – SUMMARY OF WORK

PART 1 GENERAL

1.1 WORK INCLUDED

A. Base Bid:

1. Work of this project includes but is not limited to the following:

a. Construction of a new 1 story building and associated site improvements to serve as a multi-purpose Parish Hall for St. Andrew Catholic Church, at 1401 Valley Ave E, Sumner, Washington.

B. Alternate Bids:

1. See Section 01 23 00 for Alternate bid descriptions.

1.2 WORK BY OWNER AND OTHER CONTRACTORS ON-SITE

A. Work by Owner and other Contractors will occur before, during and after Contractor's scope of work. Work that interfaces with Contractor's work will be identified on the Contractor's schedule and coordinated between Owner and Contractor.

1. Furnishing of miscellaneous items as noted on mechanical and electrical plans.

1.3 GENERAL CONSTRUCTION

A. All work to be bid under one general contract, except for work specified under 1.2.

B. Include all labor, material, equipment, and related services necessary to complete the work called for by the drawings and specified herein.

C. NOTE: St. Andrew buildings are non-smoking. Smoking will not be permitted within any buildings, or near entrances, air intakes or operable windows of any buildings in or near this project's scope of work.

1.4 COMPLETION TIME

A. All work must be substantially completed by Tuesday, _____, 2020. Final completion is to be achieved within 14 days after substantial completion. The notice to proceed is tentatively scheduled to be issued on or around Friday, _____, 2020.

1.5 COORDINATING AND SCHEDULING

A. The Contractor is responsible for coordinating and scheduling all work of the project.

B. The site, immediate surroundings, and access to the site shall be kept clean and made presentable as requested. Disruptive noise and activities must be reviewed and authorized by the project representative, and minimized. The Contractor's project schedule shall recognize these days of minimal impact or no activity.

1.6 WORK SEQUENCE

A. Immediately after award of contract and before commencing any work, develop schedule and sequence of work, including dates in sequence.

1.7 DESIGN TEAM

A. Architect:

RMC Architects, PLLC
POC – Brad Cornwell, AIA or Allison Ross
1223 Railroad Ave.
Bellingham, WA 98225
Phone #: (360) 676-7733
Email: brad.c@rmcarchitects.com
allison.r@rmcarchitects.com

B. Civil Engineer:

Freeland & Associates, Inc.
Inga Drechsel
220 W. Champion Street, Suite 200
Bellingham, WA 98225
Phone #: 360 676 1408
Email: idrechsel@freelandengineering.com

C. Structural Engineer

PCS Structural Solutions
Don Scott, PE
1250 Pacific Avenue, Suite 701
Tacoma, WA 98402
Phone #: 253 383 2797
Email: dscott@pcs-structural.com

D. Mechanical Engineer

Hultz/BHU
Nick Hultz
1111 Fawcett Avenue, Suite 100
Tacoma, WA 98402
(PO BOX 1243, Tacoma, 98401)
Phone #: 253 383 3257
Email: nickh@hultzbhu.com

E. Electrical Engineer

Hultz/BHU
Scott Mallory
1111 Fawcett Avenue, Suite 100
Tacoma, WA 98402
(PO BOX 1243, Tacoma, 98401)
Phone #: 253 383 3257
Email: scottm@hultzbhu.com

F. Kitchen Consultant

Bargreen Ellingson
Karl Sawyer and Joshua Pearce
6626 Tacoma Mall Blvd, B
Tacoma, WA 98409
Phone #: 253 471 3791
Email: ksawyer@bargreen.com
jpearce@bargreen.com

G. General Contractor

Hilger Construction
1090 25TH Avenue East
Tacoma, WA 98445
Phone #: 253 584 4766
Nick Hilger
Email: nick.hilger@hilgerconstruction.com
David Mack
Email: david.mack@hilgerconstruction.com

PART 2 PRODUCTS

2.1 NOT APPLICABLE

PART 3 EXECUTION

3.1 NOT APPLICABLE

END OF SECTION

SECTION 01 23 00 - ALTERNATES

PART 1 - GENERAL

1.1 SUMMARY

A. Section includes administrative and procedural requirements for alternates.

1.2 DEFINITIONS

A. Alternate: An amount proposed by bidders and stated on the Bid Form for certain work defined in the bidding requirements that may be added to or deducted from the base bid amount if Owner decides to accept a corresponding change either in the amount of construction to be completed or in the products, materials, equipment, systems, or installation methods described in the Contract Documents.
   1. Alternates described in this Section are part of the Work only if enumerated in the Agreement.
   2. The cost or credit for each alternate is the net addition to or deduction from the Contract Sum to incorporate alternate into the Work. No other adjustments are made to the Contract Sum.

1.3 PROCEDURES

A. Coordination: Revise or adjust affected adjacent work as necessary to completely integrate work of the alternate into Project.
   1. Include as part of each alternate, miscellaneous devices, accessory objects, and similar items incidental to or required for a complete installation whether or not indicated as part of alternate.
   2. Pricing for each alternate shall include costs of related coordination, revision, or adjustment.

B. Notification: Immediately following award of the Contract, notify each party involved, in writing, of the status of each alternate. Indicate if alternates have been accepted, rejected, or deferred for later consideration. Include a complete description of negotiated revisions to alternates.

C. Execute accepted alternates under the same conditions as other work of the Contract.

D. Schedule: A schedule of alternates is included at the end of this Section. Specification Sections referenced in schedule contain requirements for materials necessary to achieve the work described under each alternate.

PART 2 - PRODUCTS (Not Used)

PART 3 - EXECUTION

3.1 SCHEDULE OF ALTERNATES

A. Alternate No. 1:
   1. Base Bid:
   2. Alternate:

B. Alternate No. 2:
   1. Base Bid:
   2. Alternate:

END OF SECTION 01 23 00

SECTION 01 25 00 — PRODUCT SELECTION, SUBSTITUTIONS & HANDLING

PART 1 GENERAL

1.1 GENERAL

A. This section specifies administrative and procedural requirements governing the Contractor's selection of products for use in the Project; administrative procedures for handling requests for substitutions made before and after award of Contract; and general procedures for product handling.

1. 2 DEFINITIONS

A. Definitions used in this section are not intended to negate the meaning of other terms used in the contract documents.

1. "Products" are items purchased for incorporation in the work, regardless of whether they were specifically purchased for the project or taken from the Contractor's previously purchased stock.

2. "Named Products" are products identified by use of the manufacturer's name for a product, including such items as a make or model designation, as recorded in published product literature, of the latest issue as of the date of the contract documents.

3. "Materials" are products that must be cut, shaped, worked, mixed, finished, refined or otherwise fabricated, processed, or installed to form units of work.

4. "Equipment" is a product with operational parts, whether motorized or manually operated, and in particular, a product that requires service connections such as wiring or piping.

1.3 QUALITY ASSURANCE

A. Source Limitations: To fullest extent possible, provide product of same kind, from a single source.

B. Compatibility of Options: When Contractor is given the option of selecting between two or more products for use on the project, the product selected shall be compatible with products previously selected, even if previously selected products were also options.

C. References to named products are presumed to set a standard of quality. The terms "equal", "or equivalent" are presumed and need not be required in the specifications. The terms "or approved equal", "or approved equivalent" require the Contractor to follow the requirements for "product substitution".

1.4 PRODUCT SELECTION

A. General Product Requirements: Provide products that comply with Contract Documents, that are undamaged and, unless otherwise indicated, unused at the time of installation.

1. Provide products complete with all accessories, trim, finish, safety guards, and other devices and details needed for a complete installation and for the intended use and effect.

2. Standard Products: Where available, provide standard products of type and manufacture used successfully in similar situations on other projects.

3. Nameplates: Except for required labels and operating data, do not attach or imprint manufacturer's or producer's nameplate or trademarks on surfaces of products exposed to view in occupied spaces or on the building exterior.

a. Labels: Locate required product labels and stamps on a concealed surface or, where required for observation after installation, on an accessible surface that is not conspicuous.

B. Product Selection Procedures: Product selection is governed by Contract Documents and governing regulations. Procedures governing product selections include the following:

1. Proprietary Specification Requirements: Where only a single product or manufacturer is named, followed by "no equals, no substitutions, or no exceptions", provide the product named. Advise Architect when none of the named products comply with specification requirements or are not feasible for use.

2. Semi-proprietary Specification Requirements: Where two or more products or manufacturers are named, followed by "no equals, no substitution, or no exceptions", provide one of the products named. Advise Architect when none of the named products comply with specification requirements, or are not feasible for use.

3. Non-Proprietary Specification Requirements: Where the specifications name products or manufacturers that are indicative of the type and quality of the product to be incorporated in the Work, and maybe followed by the term “or equal”, "or approved equal" or "approved equivalent", comply with the Contract Document provisions concerning product substitutions to obtain approval for use of an unnamed product.

4. Descriptive Specification Requirements: Where the specifications describe a product or assembly defining the characteristics required, but without use of a brand or trade name, provide products or

assemblies that provide the characteristics indicated and otherwise comply with contract requirements.

5. Performance Specification Requirements: Where Specifications require compliance with performance requirements, provide products that comply with the requirements which are recommended by the manufacturer for the application indicated. Submit manufacturer's recommendations contained in published product literature, or submit the Manufacturer's individual certification of performance for approval by Architect. General overall performance of a product is implied where the product is specified for specific application.

6. Visual Matching: Where matching an established sample is required, the Architect's decision will be final on whether a proposed product matches satisfactorily.

   a. Where there is no product available within the specified product category which matches satisfactorily and also complies with other specified requirements, comply with the provisions of the Contract Documents concerning substitutions for the selection of a matching product in another product category.

7. Visual Selection: Where specified product requirements include the phrase "...as selected from the manufacturer's standard colors, patterns, textures..." or similar phrases, select a product and manufacturer that complies with other specified requirements. Architect will select the color, patterns, and texture from the product line selected.

1.5 PRODUCT SUBSTITUTION

A. General: If a bidder or Contractor desires approval of some material or product other than that specified, he/she may submit a written request for approval of the substitute item in accordance with the following requirements:

1. All such requests must be made on the Substitution Request Form, attached at end of this section.

2. No request for approval will be considered unless submitted in accordance with this section.

3. Final decision as to whether an item is an equal or satisfactory substitution rests with the Owner.

B. Substitution Requests: Every substitution request must state whether the item offered is an equal or better substitution. Alternative or substitute material or product must be accompanied by its reference in the Contract Documents and complete catalog, technical and other information for both the specified item and the proposed substitution. If applicable, include

samples showing comparison for physical and other pertinent characteristics as required to establish equivalence of acceptability for the proposed application. Where specific test results are required by the Contract Documents, the comparison data for the proposed item shall be based upon the same test methods as those described, or they shall be correlated to clearly demonstrate comparability. The same guarantee described for the specified product is required for the substitution.

C. During Bid Period: Submit substitution requests for approval of alternative materials or products specified. All requests must be received by Architect no later than ten (10) days prior to scheduled time for receipt of bid or proposal in order to receive consideration. Bidders will be informed by addendum of additional materials and products approved for use. No other form of approval will be given during bid period and bidders shall not rely upon any approval not incorporated into the documents in this matter.

D. After Award of Contract: Substitution requests for approval of substitute materials will not be considered, except if one or more of the following conditions exists. With its request, the Contractor shall indicate which condition he believes applies:

1. Unavailability: A substitution is required because the specified item is not available, due to factors beyond the control of the Contractor.

2. Unsuitability: Subsequent information or changes disclose inability of the specified item to perform as intended.

3. Regulatory requirements: Final interpretation of Code, regulatory requirements, safety requirements, or insurance requirements necessitate a change due to inability of the specified item to conform.

4. Warranty: Manufacturer or fabricator cannot certify or warrant performance of specified item as required.

5. Owner's benefit: In the judgment of the Architect, acceptance of the proposed substitution is clearly in the Owner's best interest because of cost, quality, or other consideration. In requesting a substitution under this clause, the contractor shall furnish substantiation of any such reason.

6. “Approved”, “Approved equal” or “approved equivalent”: Where products or manufacturers are specified by name, accompanied by the term “approved”, “or approved equal” or “approved equivalent”.

E. Redesign and coordination: In making request for approval of alternative or substitute materials, the Bidder/Contractor must represent that he has personally investigated the proposed product and, in his opinion, it is equivalent or superior on all respects to that specified. Also, Contractor will coordinate all trades including changes in the work thereof as may be required, will waive all claims for additional costs which subsequently become apparent as a consequence of the substitution and will bear all

costs related hereto, including costs of Architect's services for redesign if deemed necessary.

F. Substitutions will not be considered if they are indicated or implied on shop drawings or other project data submittals, without proper notice shown on attached form.

1.6 PRODUCT DELIVERY, STORAGE, AND HANDLING

A. Deliver, store, and handle products in accordance with the manufacturer's recommendations, using means and methods that will prevent damage, deterioration, loss or theft.

B. Schedule delivery to minimize long-term storage at the site and to prevent overcrowding of construction spaces.

C. Coordinate delivery with installation time to ensure minimum holding time for items that are flammable, hazardous, easily damaged, or sensitive to deterioration, theft and other losses.

D. Deliver products to the site in the manufacturer's original sealed container or other packaging system, complete with labels and instructions for handling, storing, unpacking, protecting, and installing.

E. Inspect products upon delivery to ensure compliance with the Contract Documents, and to ensure that products are undamaged and properly protected.

F. Store products at the site in a manner that will facilitate inspection and measurement of quantity or counting of units.

G. Store heavy materials away from the project structure in a manner that will not endanger the supporting construction.

H. Store products subject to damage by the elements above ground, under cover in a weather-tight enclosure, with ventilation adequate to prevent condensation. Maintain temperature and humidity within range required by manufacturer's instructions.

PART 2 PRODUCTS (NOT APPLICABLE)

PART 3 EXECUTION (NOT APPLICABLE)

End of Section 01 25 00

SECTION 01 25 01

SUBSTITUTION REQUEST FORM

SUBMITTED TO: RMC Architects

PROJECT: St. Andrew Parish Hall

SPECIFIED ITEM:

Section No. Paragraph No. Description of Specified Item

The Undersigned requests consideration for the following substitution to that specified

PROPOSED SUBSTITUTION:

ATTACHED DATA:

Include product description, specifications, drawings, photographs, performance, and test data as necessary for evaluation. Clearly identify proposed substitution and portions of data from other items where more than one item is described.

Include description of changes to Contract Documents required by proposed substitution.

CERTIFICATION:

The Undersigned certifies that the following paragraphs are correct:

1. Proposed substitution does not affect dimensions shown on Drawings.
2. The Undersigned will pay for changes to building design, including engineering design, detailing, and construction costs, caused by requested substitution.
3. Proposed substitution will have no adverse effect on other trades, Construction Schedule, or specified warranty requirements.
4. Maintenance and service parts will be locally available for proposed substitution.

Undersigned further states that function, appearance, and quality of proposed substitution are equivalent or superior to specified item.

SUBMITTED BY:

Signature _____

Firm _____

Address _____

Date _____

Telephone ( ) _____

FAX ( ) _____

LIST ATTACHMENTS:

FOR USE BY ARCHITECT:

☐ Approved ☐ Approved as Noted

☐ Not Approved ☐ Received too Late

By _____

Date _____

Remarks _____

END OF SECTION

PSECTION 01 26 00 - CONTRACT MODIFICATION PROCEDURES

PART 1 - GENERAL

1.1 SUMMARY

A. Section includes administrative and procedural requirements for handling and processing Contract modifications.

1.2 MINOR CHANGES IN THE WORK

A. Architect will issue supplemental instructions authorizing minor changes in the Work, not involving adjustment to the Contract Sum or the Contract Time, on AIA Document G710, "Architect's Supplemental Instructions."

1.3 PROPOSAL REQUESTS

A. Owner-Initiated Proposal Requests: Architect will issue a detailed description of proposed changes in the Work that may require adjustment to the Contract Sum or the Contract Time. If necessary, the description will include supplemental or revised Drawings and Specifications.
   1. Work Change Proposal Requests issued by Architect are not instructions either to stop work in progress or to execute the proposed change.
   2. Within time specified in Proposal Request 14 days, when not otherwise specified, after receipt of Proposal Request, submit a quotation estimating cost adjustments to the Contract Sum and the Contract Time necessary to execute the change.
      a. Include a list of quantities of products required or eliminated and unit costs, with total amount of purchases and credits to be made. If requested, furnish survey data to substantiate quantities.
      b. Indicate applicable taxes, delivery charges, equipment rental, and amounts of trade discounts.
      c. Include costs of labor and supervision directly attributable to the change.
      d. Include anticipated impact on Contractor's construction schedule. Use available total float before requesting an extension of the Contract Time. Note that additional time, if any, will only be considered at the time of a proposed change. Cost of that additional time, if any, shall also be included in the proposal.
      e. Quotation Form: Use forms acceptable to Architect.

B. Contractor-Initiated Work Change Proposals: If latent or changed conditions require modifications to the Contract, Contractor may initiate a claim by submitting a request for a change to Architect.
   1. Include a statement outlining reasons for the change and the effect of the change on the Work. Provide a complete description of the proposed change. Indicate the effect of the proposed change on the Contract Sum and the Contract Time.
   2. Include a list of quantities of products required or eliminated and unit costs, with

total amount of purchases and credits to be made. If requested, furnish survey data to substantiate quantities.

3. Indicate applicable taxes, delivery charges, equipment rental, and amounts of trade discounts.
4. Include costs of labor and supervision directly attributable to the change.
5. Include anticipated impact on Contractor's construction schedule. Use available total float before requesting an extension of the Contract Time. Note that additional time, if any, will only be considered at the time of a proposed change. Cost of that additional time, if any, shall also be included in the proposal.
6. Comply with requirements in Section 01 25 00 "Substitution Procedures" if the proposed change requires substitution of one product or system for product or system specified.
7. Work Change Proposal Request Form: Use form acceptable to Architect.

1.4 ADMINISTRATIVE CHANGE ORDERS

A. Allowance Adjustment: See Section 01 21 00 "Allowances" for administrative procedures for preparation of Change Order Proposal for adjusting the Contract Sum to reflect actual costs of allowances.

B. Unit-Price Adjustment: See Section 01 22 00 "Unit Prices" for administrative procedures for preparation of Change Order Proposal for adjusting the Contract Sum to reflect measured scope of unit-price work.

1.5 CHANGE ORDER PROCEDURES

A. On Owner's approval of a Work Changes Proposal Request, Architect will issue a Change Order for signatures of Owner and Contractor on AIA Document G701.

1.6 CONSTRUCTION CHANGE DIRECTIVE

A. Construction Change Directive: Architect may issue a Construction Change Directive on AIA Document G714. Construction Change Directive instructs Contractor to proceed with a change in the Work, for subsequent inclusion in a Change Order.
   1. Construction Change Directive contains a complete description of change in the Work. It also designates method to be followed to determine change in the Contract Sum or the Contract Time.

B. Documentation: Maintain detailed records on a time and material basis of work required by the Construction Change Directive.
   1. After completion of change, submit an itemized account and supporting data necessary to substantiate cost and time adjustments to the Contract.

PART 2 - PRODUCTS (Not Used)

PART 3 - EXECUTION (Not Used)

END OF SECTION 01 26 00

SECTION 01 29 00 - PAYMENT PROCEDURES

PART 1 - GENERAL

1.1 SUMMARY

A. Section includes administrative and procedural requirements necessary to prepare and process Applications for Payment.

B. Related Requirements:
   1. Section 01 26 00 "Contract Modification Procedures"
   2. Section 01 74 19 Construction Waste Management and Disposal

1.2 SCHEDULE OF VALUES

A. Coordination: Coordinate preparation of the schedule of values with preparation of Contractor's construction schedule.
   1. Coordinate line items in the schedule of values with other required administrative forms and schedules, including the following:
      a. Application for Payment forms with continuation sheets.
      b. Submittal schedule.
      c. Items required to be indicated as separate activities in Contractor's construction schedule.
   2. Submit the schedule of values to Architect at earliest possible date but no later than seven days before the date scheduled for submittal of initial Applications for Payment.

B. Format and Content: Use Project Manual table of contents as a guide to establish line items for the schedule of values. Provide at least one line item for each Specification Section.
   1. Identification: Include the following Project identification on the schedule of values:
      a. Project name and location.
      b. Name of Architect.
      c. Architect's project number.
      d. Contractor's name and address.
      e. Date of submittal.
   2. Arrange schedule of values consistent with format of AIA Document G703.
   3. Provide a breakdown of the Contract Sum in enough detail to facilitate continued evaluation of Applications for Payment and progress reports. Coordinate with Project Manual table of contents. Provide multiple line items for principal subcontract amounts in excess of five percent of the Contract Sum.
      a. Include separate line items under Contractor and principal subcontracts for Project closeout requirements in an amount totaling two percent of the Contract Sum and subcontract amount.
   4. Round amounts to nearest whole dollar; total shall equal the Contract Sum.
   5. Provide a separate line item in the schedule of values for each part of the Work

where Applications for Payment may include materials or equipment purchased or fabricated and stored, but not yet installed.

6. Allowances: Provide a separate line item in the schedule of values for each allowance. Show line-item value of unit-cost allowances, as a product of the unit cost, multiplied by measured quantity. Use information indicated in the Contract Documents to determine quantities.
7. Each item in the schedule of values and Applications for Payment shall be complete. Include total cost and proportionate share of general overhead and profit for each item.
   a. Temporary facilities and other major cost items that are not direct cost of actual work-in-place may be shown either as separate line items in the schedule of values or distributed as general overhead expense, at Contractor's option.
8. Schedule Updating: Update and resubmit the schedule of values with the next Applications for Payment when Change Orders result in a change in the Contract Sum. Include each Change Order as a new line item.

1.3 APPLICATIONS FOR PAYMENT

A. Each Application for Payment shall be consistent with previous applications and payments as certified by Architect and paid for by Owner.
   1. Initial Application for Payment, Application for Payment at time of Substantial Completion, and final Application for Payment involve additional requirements.

B. Payment Application Times: The date for each progress payment is indicated in the Agreement between Owner and Contractor. The period of construction work covered by each Application for Payment is the period indicated in the Agreement.

C. Application for Payment Forms: Use AIA Document G702 and AIA Document G703 as form for Applications for Payment.

D. Application Preparation: Complete every entry on form. Notarize and execute by a person authorized to sign legal documents on behalf of Contractor. Architect will return incomplete applications without action.
   1. Entries shall match data on the schedule of values and Contractor's construction schedule. Use updated schedules if revisions were made.
   2. Include amounts of Change Orders and Construction Change Directives issued before last day of construction period covered by application.

E. Transmittal: Submit three signed and notarized original copies of each Application for Payment to Architect by a method ensuring receipt within 24 hours. One copy shall include waivers of lien and similar attachments if required.
   1. Transmit each copy with a transmittal form listing attachments and recording appropriate information about application.

F. Waivers of Mechanic's Lien: With each Application for Payment, submit waivers of mechanic's lien from entities lawfully entitled to file a mechanic's lien arising out of the Contract and related to the Work covered by the payment.
   1. Submit partial waivers on each item for amount requested in previous application, after deduction for retainage, on each item.

2. When an application shows completion of an item, submit conditional final or full waivers.
3. Owner reserves the right to designate which entities involved in the Work must submit waivers.
4. Waiver Forms: Submit executed waivers of lien on forms acceptable to Owner.

G. Initial Application for Payment: Administrative actions and submittals that must precede or coincide with submittal of first Application for Payment include the following:
1. List of subcontractors.
2. Schedule of values.
3. Contractor's construction schedule (preliminary if not final).
4. Submittal schedule (preliminary if not final).
5. List of Contractor's staff assignments.

H. Application for Payment at Substantial Completion: After Architect issues the Certificate of Substantial Completion, submit an Application for Payment showing 100 percent completion for portion of the Work claimed as substantially complete.
1. Include documentation supporting claim that the Work is substantially complete and a statement showing an accounting of changes to the Contract Sum.
2. This application shall reflect Certificates of Partial Substantial Completion issued previously for Owner occupancy of designated portions of the Work.

I. Final Payment Application: After completing Project closeout requirements, submit final Application for Payment with releases and supporting documentation not previously submitted and accepted, including, but not limited, to the following:
1. Evidence of completion of Project closeout requirements.
2. Insurance certificates for products and completed operations where required and proof that taxes, fees, and similar obligations were paid.
3. Updated final statement, accounting for final changes to the Contract Sum.
4. AIA Document G706-1994, "Contractor's Affidavit of Payment of Debts and Claims."
5. AIA Document G706A-1994, "Contractor's Affidavit of Release of Liens."
6. AIA Document G707-1994, "Consent of Surety to Final Payment."
7. Evidence that claims have been settled.
8. Final liquidated damages settlement statement.

PART 2 - PRODUCTS (Not Used)

PART 3 - EXECUTION (Not Used)

END OF SECTION 01 29 00

SECTION 01 31 00 - PROJECT MANAGEMENT AND COORDINATION

PART 1 - GENERAL

1.1 SUMMARY

A. Section includes administrative provisions for coordinating construction operations on Project including, but not limited to, the following:
   1. Coordination drawings.
   2. Requests for Information (RFIs).
   3. Project Web site.
   4. Project meetings.

1.2 DEFINITIONS

A. RFI: Request from Owner, Architect, or Contractor seeking information required by or clarifications of the Contract Documents.

1.3 INFORMATIONAL SUBMITTALS

A. Subcontract List: Prepare a written summary identifying individuals or firms proposed for each portion of the Work, including those who are to furnish products or equipment fabricated to a special design. Include the following information in tabular form:
   1. Name, address, and telephone number of entity performing subcontract or supplying products.
   2. Number and title of related Specification Section(s) covered by subcontract.
   3. Drawing number and detail references, as appropriate, covered by subcontract.

1.4 GENERAL COORDINATION PROCEDURES

A. Coordination: Coordinate construction operations included in different Sections of the Specifications to ensure efficient and orderly installation of each part of the Work. Coordinate construction operations, included in different Sections, which depend on each other for proper installation, connection, and operation.
   1. Schedule construction operations in sequence required to obtain the best results where installation of one part of the Work depends on installation of other components, before or after its own installation.
   2. Coordinate installation of different components to ensure maximum performance and accessibility for required maintenance, service, and repair.
   3. Make adequate provisions to accommodate items scheduled for later installation.

B. Prepare memoranda for distribution to each party involved, outlining special procedures required for coordination. Include such items as required notices, reports, and list of attendees at meetings.
   1. Prepare similar memoranda for Owner and separate contractors if coordination of

their Work is required.

1.5 COORDINATION DRAWINGS

A. Coordination Drawings, General: Prepare coordination drawings according to requirements in individual Sections, where installation is not completely shown on Shop Drawings, where limited space availability necessitates coordination, or if coordination is required to facilitate integration of products and materials fabricated or installed by more than one entity.
   1. Content: Project-specific information, drawn accurately to a scale large enough to indicate and resolve conflicts. Do not base coordination drawings on standard printed data. Include the following information, as applicable:
      a. Indicate functional and spatial relationships of components of architectural, structural, civil, mechanical, and electrical systems.
      b. Indicate dimensions shown on the Drawings. Specifically note dimensions that appear to be in conflict with submitted equipment and minimum clearance requirements. Provide alternate sketches to Architect indicating proposed resolution of such conflicts. Minor dimension changes and difficult installations will not be considered changes to the Contract.

B. Coordination Drawing Organization: Organize coordination drawings as follows:
   1. Floor Plans and Reflected Ceiling Plans: Show architectural and structural elements, and mechanical, plumbing, fire-protection, fire-alarm, and electrical Work. Show locations of visible ceiling-mounted devices relative to acoustical ceiling grid.
   2. Plenum Space: Indicate subframing for support of ceiling and wall systems, mechanical and electrical equipment, and related Work. Locate components within ceiling plenum to accommodate layout of light fixtures indicated on Drawings.
   3. Mechanical Rooms: Provide coordination drawings for mechanical rooms showing plans and elevations of mechanical, plumbing, fire-protection, fire-alarm, and electrical equipment.
   4. Structural Penetrations: Indicate penetrations and openings required for all disciplines.
   5. Slab Edge and Embedded Items: Indicate slab edge locations and sizes and locations of embedded items for metal fabrications, sleeves, anchor bolts, bearing plates, angles, door floor closers, slab depressions for floor finishes, curbs and housekeeping pads, and similar items.
   6. Review: Architect will review coordination drawings to confirm that the Work is being coordinated, but not for the details of the coordination, which are Contractor's responsibility.

1.6 REQUESTS FOR INFORMATION (RFIs)

A. General: Immediately on discovery of the need for additional information or interpretation of the Contract Documents, Contractor shall prepare and submit an RFI in the form specified.
   1. Architect will return RFIs submitted to Architect by other entities controlled by Contractor with no response.

2. Coordinate and submit RFIs in a prompt manner so as to avoid delays in Contractor's work or work of subcontractors.

B. Content of the RFI: Include a detailed, legible description of item needing information or interpretation and the following:
1. Project name.
2. Project number.
3. Date.
4. Name of Contractor.
5. Name of Architect.
6. RFI number, numbered sequentially.
7. RFI subject.
8. Specification Section number and title and related paragraphs, as appropriate.
9. Drawing number and detail references, as appropriate.
10. Field dimensions and conditions, as appropriate.
11. Contractor's suggested resolution. If Contractor's solution(s) impacts the Contract Time or the Contract Sum, Contractor shall state impact in the RFI.
12. Contractor's signature.
13. Attachments: Include sketches, descriptions, measurements, photos, Product Data, Shop Drawings, coordination drawings, and other information necessary to fully describe items needing interpretation.

C. RFI Forms: Software-generated form with substantially the same content as indicated above, acceptable to Architect.

D. Architect's Action: Architect will review each RFI, determine action required, and respond. Allow seven working days for Architect's response for each RFI. RFIs received by Architect after 1:00 p.m. will be considered as received the following working day. Architect may choose to delay response to low priority RFIs in order to facilitate response to high priority RFIs.
1. The following RFIs will be returned without action:
   a. Requests for approval of submittals.
   b. Requests for approval of substitutions.
   c. Requests for coordination information already indicated in the Contract Documents.
   d. Requests for adjustments in the Contract Time or the Contract Sum.
   e. Requests for interpretation of Architect's actions on submittals.
   f. Incomplete RFIs or inaccurately prepared RFIs.
2. Architect's action may include a request for additional information, in which case Architect's time for response will date from time of receipt of additional information.
3. Architect's action on RFIs that may result in a change to the Contract Time or the Contract Sum may be eligible for Contractor to submit Change Proposal according to Section 01 26 00 "Contract Modification Procedures."
   a. If Contractor believes the RFI response warrants change in the Contract Time or the Contract Sum, notify Architect in writing within 10 days of receipt of the RFI response.

E. RFI Log: Prepare, maintain, and submit a tabular log of RFIs organized by the RFI number. Submit log weekly. Include the following:
1. Project name.

2. Name and address of Contractor.
3. Name and address of Architect.
4. RFI number including RFIs that were dropped and not submitted.
5. RFI description.
6. Date the RFI was submitted.
7. Date Architect's response was received.

F. On receipt of Architect's action, update the RFI log and immediately distribute the RFI response to affected parties. Review response and notify Architect within seven days if Contractor disagrees with response.
   1. Identification of related Minor Change in the Work, Construction Change Directive, and Proposal Request, as appropriate.

1.7 PROJECT WEB SITE

A. Provide, administer, and use Project Web site for purposes of hosting and managing project communication and documentation until Final Completion. Project Web site shall include the following functions:
   1. Project directory.
   2. Project correspondence.
   3. Meeting minutes.
   4. Contract modifications forms and logs.
   5. RFI forms and logs.
   6. Task and issue management.
   7. Photo documentation.
   8. Schedule and calendar management.
   9. Submittals forms and logs.
   10. Payment application forms.
   11. Drawing and specification document hosting, viewing, and updating.
   12. Online document collaboration.
   13. Reminder and tracking functions.
   14. Archiving functions.

B. On completion of Project, provide two complete archive copies of Project Web site files to Owner and to Architect in a digital storage format acceptable to Architect.

C. Contractor, subcontractors, and other parties granted access by Contractor to Project Web site shall execute a data licensing agreement in the form of Agreement acceptable to Owner and Architect.

1.8 PROJECT MEETINGS

A. General: Work with Architect to schedule and conduct meetings and conferences at Project site unless otherwise indicated.
   1. Attendees: Inform contractors, subcontractors and suppliers whose presence is required, of date and time of each meeting.

B. Preconstruction Conference: Architect will schedule and conduct a preconstruction conference before starting construction, at a time convenient to Owner and Architect,

but no later than 15 days after execution of the Agreement.

1. Attendees: Authorized representatives of Owner, Architect, and their consultants; Contractor and its superintendent; major subcontractors; suppliers; and other concerned parties shall attend the conference. Participants at the conference shall be familiar with Project and authorized to conclude matters relating to the Work.
2. Agenda: Discuss items of significance that could affect progress, including the following:
    a. Tentative construction schedule.
    b. Phasing.
    c. Critical work sequencing and long-lead items.
    d. Designation of key personnel and their duties.
    e. Procedures for processing field decisions and Change Orders.
    f. Procedures for RFIs.
    g. Procedures for testing and inspecting.
    h. Procedures for processing Applications for Payment.
    i. Distribution of the Contract Documents.
    j. Submittal procedures.
    k. Sustainable design requirements.
    l. Preparation of record documents.
    m. Use of the premises.
    n. Work restrictions.
    o. Working hours.
    p. Owner's occupancy requirements.
    q. Responsibility for temporary facilities and controls.
    r. Procedures for moisture and mold control.
    s. Procedures for disruptions and shutdowns.
    t. Construction waste management and recycling.
    u. Parking availability.
    v. Office, work, and storage areas.
    w. Equipment deliveries and priorities.
    x. First aid.
    y. Security.
    z. Progress cleaning.
3. Minutes: Entity responsible for conducting meeting will record and distribute meeting minutes.

C. Preinstallation Conferences: Conduct a preinstallation conference at Project site before each construction activity that requires coordination with other construction.

1. Attendees: Installer and representatives of manufacturers and fabricators involved in or affected by the installation and its coordination or integration with other materials and installations that have preceded or will follow, shall attend the meeting. Advise Architect of scheduled meeting dates.
2. Agenda: Review progress of other construction activities and preparations for the particular activity under consideration.
3. Record significant conference discussions, agreements, and disagreements, including required corrective measures and actions.
4. Reporting: Distribute minutes of the meeting to each party present and to other parties requiring information.
5. Do not proceed with installation if the conference cannot be successfully concluded. Initiate whatever actions are necessary to resolve impediments to

performance of the Work and reconvene the conference at earliest feasible date.

PART 2 - PRODUCTS (Not Used)

PART 3 - EXECUTION (Not Used)

END OF SECTION 01 31 00

SECTION 01 32 00 - CONSTRUCTION PROGRESS DOCUMENTATION

PART 1 - GENERAL

1.1 SUMMARY

A. Section includes administrative and procedural requirements for documenting the progress of construction during performance of the Work, including the following:

1. Contractor's construction schedule.
2. Construction schedule updating reports.
3. Daily construction reports.
4. Site condition reports.
5. Interval schedule.

1.2 DEFINITIONS

A. Activity: A discrete part of a project that can be identified for planning, scheduling, monitoring, and controlling the construction project. Activities included in a construction schedule consume time and resources.

1. Critical Activity: An activity on the critical path that must start and finish on the planned early start and finish times.
2. Predecessor Activity: An activity that precedes another activity in the network.
3. Successor Activity: An activity that follows another activity in the network.

B. Critical Path: The longest connected chain of interdependent activities through the network schedule that establishes the minimum overall Project duration and contains no float.

C. Float: The measure of leeway in starting and completing an activity.

1. Float time is not for the exclusive use or benefit of either Owner or Contractor, but is a jointly owned, expiring Project resource available to both parties as needed to meet schedule milestones and Contract completion date.

1.3 INFORMATIONAL SUBMITTALS

A. Format for Submittals: Submit required submittals in the following format:
1. PDF electronic file.

B. Startup Network Diagram: Of size required to display entire network for entire construction period. Show logic ties for activities.

C. Contractor's Construction Schedule: Initial schedule, of size required to display entire schedule for entire construction period.

D. Construction Schedule Updating Reports: Submit with Applications for Payment.

E. Daily Construction Reports: Submit when requested.

F. Site Condition Reports: Submit at time of discovery of differing conditions.

1.4 COORDINATION

A. Coordinate Contractor's construction schedule with the schedule of values, submittal schedule, progress reports, payment requests, and other required schedules and reports.

1. Secure time commitments for performing critical elements of the Work from entities involved.
2. Coordinate each construction activity in the network with other activities and schedule them in proper sequence.

PART 2 - PRODUCTS

2.1 CONTRACTOR'S CONSTRUCTION SCHEDULE, GENERAL

A. Time Frame: Extend schedule from date established for the Notice to Proceed to date of final completion.

1. Contract completion date shall not be changed by submission of a schedule that shows an early completion date, unless specifically authorized by Change Order.

B. Activities: Treat each story or separate area as a separate numbered activity for each main element of the Work. Comply with the following:

1. Activity Duration: Define activities so no activity is longer than 20 days, unless specifically allowed by Architect.
2. Procurement Activities: Include procurement process activities for major items, requiring a cycle of more than 60 days, as separate activities in schedule. Procurement cycle activities include, but are not limited to, submittals, approvals, purchasing, fabrication, and delivery.
3. Submittal Review Time: Include review and resubmittal times indicated in Section 01 33 00 "Submittal Procedures" in schedule. Coordinate submittal review times in Contractor's construction schedule with submittal schedule.
4. Startup and Testing Time: Include no fewer than 15 days for startup and testing.
5. Substantial Completion: Indicate completion in advance of date established for Substantial Completion, and allow time for Architect's administrative procedures necessary for certification of Substantial Completion.
6. Punch List and Final Completion: Include not more than 14 days for completion of punch list items and final completion.

C. Constraints: Include constraints and work restrictions indicated in the Contract Documents and as follows in schedule, and show how the sequence of the Work is affected.

1. Work Stages: Indicate important stages of construction for each major portion of the Work.

D. Milestones: Include milestones indicated in the Contract Documents in schedule, including, but not limited to, the Notice to Proceed, Substantial Completion, and final completion.

E. Upcoming Work Summary: Prepare summary report indicating activities scheduled to occur or commence prior to submittal of next schedule update. Summarize the following issues:

1. Unresolved issues.
2. Unanswered Requests for Information.
3. Rejected or unreturned submittals.
4. Notations on returned submittals.
5. Pending modifications affecting the Work and Contract Time.

F. Recovery Schedule: When periodic update indicates the Work is 14 or more calendar days behind the current approved schedule, submit a separate recovery schedule indicating means by which Contractor intends to regain compliance with the schedule.

2.2 CONTRACTOR'S CONSTRUCTION SCHEDULE (GANTT CHART)

A. Gantt-Chart Schedule: Submit a comprehensive, fully developed, horizontal, Gantt-chart-type, Contractor's construction schedule within 14 days of date established for the Notice to Proceed.

B. Preparation: Indicate each significant construction activity separately. Identify first workday of each week with a continuous vertical line.

1. For construction activities that require three months or longer to complete, indicate an estimated completion percentage in 10 percent increments within time bar.

2.3 INTERVAL SCHEDULE

A. Interval Schedule: Prepare and update weekly a 4 week interval schedule. Show 1 week of actual progress (planned vs. actual performance). Forecast 3 weeks of start and completion dates for each activity, task or event in comparison to the prepared schedule.

1. Activities in interval schedule shall relate directly to activities in the construction schedule.

2.4 REPORTS

A. Daily Construction Reports: Prepare a daily construction report recording the following information concerning events at Project site:

1. List of subcontractors at Project site.
2. List of separate contractors at Project site.
3. Approximate count of personnel at Project site.
4. Equipment at Project site.
5. Material deliveries.
6. High and low temperatures and general weather conditions, including presence of rain or snow.
7. Accidents.
8. Meetings and significant decisions.
9. Unusual events.
10. Stoppages, delays, shortages, and losses.
11. Meter readings and similar recordings.
12. Emergency procedures.
13. Orders and requests of authorities having jurisdiction.
14. Change Orders received and implemented.
15. Construction Change Directives received and implemented.
16. Services connected and disconnected.
17. Equipment or system tests and startups.
18. Partial completions and occupancies.
19. Substantial Completions authorized.

B. Site Condition Reports: Immediately on discovery of a difference between site conditions and the Contract Documents, prepare and submit a detailed report. Submit with a Request for Information. Include a detailed description of the differing conditions, together with recommendations for changing the Contract Documents.

PART 3 - EXECUTION

3.1 CONTRACTOR'S CONSTRUCTION SCHEDULE

A. Contractor's Construction Schedule Updating: At monthly intervals, update schedule to reflect actual construction progress and activities. Issue schedule one week before each regularly scheduled progress meeting.

1. Revise schedule immediately after each meeting or other activity where revisions have been recognized or made. Issue updated schedule concurrently with the report of each such meeting.
2. Include a report with updated schedule that indicates every change, including, but not limited to, changes in logic, durations, actual starts and finishes, and activity durations.
3. As the Work progresses, indicate final completion percentage for each activity.

B. Distribution: Distribute copies of approved schedule to Architect, Owner, separate contractors, testing and inspecting agencies, and other parties identified by Contractor with a need-to-know schedule responsibility.

1. Post copies in Project meeting rooms and temporary field offices.
2. When revisions are made, distribute updated schedules to the same parties and post in the same locations. Delete parties from distribution when they have completed their assigned portion of the Work and are no longer involved in performance of construction activities.

END OF SECTION 01 32 00

SECTION 01 33 00 - SUBMITTAL PROCEDURES

PART 1 - GENERAL

1.1 SUMMARY

A. Section includes requirements for the submittal schedule and administrative and procedural requirements for submitting Shop Drawings, Product Data, Samples, and other submittals.

B. Related Requirements:
   1. Section 01 32 00 "Construction Progress Documentation".
   2. Section 01 78 23 "Operation and Maintenance Data".
   3. Section 01 78 39 "Project Record Documents".
   4. Section 01 79 00 "Demonstration and Training".

1.2 DEFINITIONS

A. Action Submittals: Written and graphic information and physical samples that require Architect's responsive action.

B. Informational Submittals: Written and graphic information and physical samples that do not require Architect's responsive action. Submittals may be rejected for not complying with requirements.

1.3 ACTION SUBMITTALS

A. Submittal Schedule: Submit a schedule of submittals, arranged in chronological order by dates required by construction schedule. Include time required for review, ordering, manufacturing, fabrication, and delivery when establishing dates. Include additional time required for making corrections or revisions to submittals noted by Architect and additional time for handling and reviewing submittals required by those corrections.

1.4 SUBMITTAL ADMINISTRATIVE REQUIREMENTS

A. Architect's Digital Data Files: Electronic copies of digital data files of the Contract Drawings will be provided by Architect for Contractor's use in preparing submittals.
   1. Architect will furnish Contractor one set of digital data drawing files of the Contract Drawings for use in preparing Shop Drawings.
      a. Architect makes no representations as to the accuracy or completeness of digital data drawing files as they relate to the Contract Drawings.
      b. Contractor shall execute a data licensing agreement in the form of Agreement form acceptable to Owner and Architect.

B. Coordination: Coordinate preparation and processing of submittals with performance of

construction activities.

1. Coordinate each submittal with fabrication, purchasing, testing, delivery, other submittals, and related activities that require sequential activity.
2. Coordinate transmittal of different types of submittals for related parts of the Work so processing will not be delayed because of need to review submittals concurrently for coordination.
    a. Architect reserves the right to withhold action on a submittal requiring coordination with other submittals until related submittals are received.

C. Processing Time: Allow time for submittal review, including time for resubmittals, as follows. Time for review shall commence on Architect's receipt of submittal. No extension of the Contract Time will be authorized because of failure to transmit submittals enough in advance of the Work to permit processing, including resubmittals.

1. Initial Review: Allow 14 days for initial review of each submittal. Allow additional time if coordination with subsequent submittals is required. Architect will advise Contractor when a submittal being processed must be delayed for coordination.
2. Resubmittal Review: Allow 14 days for review of each resubmittal.

D. Electronic Submittals: Identify and incorporate information in each electronic submittal file as follows:

1. Assemble complete submittal package into a single indexed file incorporating submittal requirements of a single Specification Section and transmittal form with links enabling navigation to each item.
2. Name file with submittal number or other unique identifier, including revision identifier.
3. Provide means for insertion to permanently record Contractor's review and approval markings and action taken by Architect.
4. Transmittal Form for Electronic Submittals: Use electronic form acceptable to Owner, containing the following information:
    a. Project name.
    b. Date.
    c. Name and address of Architect.
    d. Name of Contractor.
    e. Name of firm or entity that prepared submittal.
    f. Names of subcontractor, manufacturer, and supplier.
    g. Category and type of submittal.
    h. Submittal purpose and description.
    i. Specification Section number and title.
    j. Specification paragraph number or drawing designation and generic name for each of multiple items.
    k. Drawing number and detail references, as appropriate.
    l. Location(s) where product is to be installed, as appropriate.
    m. Related physical samples submitted directly.
    n. Indication of full or partial submittal.
    o. Transmittal number, numbered consecutively.
    p. Submittal and transmittal distribution record.
    q. Other necessary identification.
    r. Remarks.

E. Options: Identify options requiring selection by Architect.

F. Deviations: Identify deviations from the Contract Documents on submittals.

G. Resubmittals: Make resubmittals in same form and number of copies as initial submittal.
   1. Note date and content of previous submittal.
   2. Note date and content of revision in label or title block and clearly indicate extent of revision.
   3. Resubmit submittals until they are marked with approval notation from Architect's action stamp.

H. Distribution: Furnish copies of final submittals to manufacturers, subcontractors, suppliers, fabricators, installers, authorities having jurisdiction, and others as necessary for performance of construction activities. Show distribution on transmittal forms.

I. Use for Construction: Retain complete copies of submittals on Project site. Use only final action submittals that are marked with approval notation from Architect's action stamp.

PART 2 - PRODUCTS

2.1 SUBMITTAL PROCEDURES

A. General Submittal Procedure Requirements:
   1. Post electronic submittals as PDF electronic files directly to Project Web site specifically established for Project.
      a. Architect will return annotated file. Annotate and retain one copy of file as an electronic Project record document file.
   2. Submit electronic submittals via email as PDF electronic files.
      a. Architect will return annotated file. Annotate and retain one copy of file as an electronic Project record document file.

B. Product Data: Collect information into a single submittal for each element of construction and type of product or equipment.
   1. If information must be specially prepared for submittal because standard published data are not suitable for use, submit as Shop Drawings, not as Product Data.
   2. Mark each copy of each submittal to show which products and options are applicable.
   3. Include the following information, as applicable:
      a. Manufacturer's catalog cuts.
      b. Manufacturer's product specifications.
      c. Standard color charts.
      d. Statement of compliance with specified referenced standards.
      e. Testing by recognized testing agency.
      f. Application of testing agency labels and seals.
      g. Notation of coordination requirements.
      h. Availability and delivery time information.
   4. For equipment, include the following in addition to the above, as applicable:
      a. Wiring diagrams showing factory-installed wiring.

b. Printed performance curves.
c. Operational range diagrams.
d. Clearances required to other construction, if not indicated on accompanying Shop Drawings.

5. Submit Product Data before or concurrent with Samples.
6. Submit Product Data in the following format:
   a. PDF electronic file.

C. Shop Drawings: Prepare Project-specific information, drawn accurately to scale. Do not base Shop Drawings on reproductions of the Contract Documents or standard printed data.
1. Preparation: Fully illustrate requirements in the Contract Documents. Include the following information, as applicable:
   a. Identification of products.
   b. Schedules.
   c. Compliance with specified standards.
   d. Notation of coordination requirements.
   e. Notation of dimensions established by field measurement.
   f. Relationship and attachment to adjoining construction clearly indicated.
   g. Seal and signature of professional engineer if specified.
2. Sheet Size: Except for templates, patterns, and similar full-size drawings, submit Shop Drawings on sheets at least 8-1/2 by 11 inches, but no larger than 30 by 42 inches.
3. Submit Shop Drawings in the following format:
   a. PDF electronic file.

D. Samples: Submit Samples for review of kind, color, pattern, and texture for a check of these characteristics with other elements and for a comparison of these characteristics between submittal and actual component as delivered and installed.
1. Transmit Samples that contain multiple, related components such as accessories together in one submittal package.
2. Identification: Attach label on unexposed side of Samples that includes the following:
   a. Generic description of Sample.
   b. Product name and name of manufacturer.
   c. Sample source.
   d. Number and title of applicable Specification Section.
3. For projects where electronic submittals are required, provide corresponding electronic submittal of Sample transmittal and identification information for record.
4. Disposition: Maintain sets of approved Samples at Project site, available for quality-control comparisons throughout the course of construction activity. Sample sets may be used to determine final acceptance of construction associated with each set.
   a. Samples that may be incorporated into the Work are indicated in individual Specification Sections. Such Samples must be in an undamaged condition at time of use.
   b. Samples not incorporated into the Work, or otherwise designated as Owner's property, are the property of Contractor.
5. Samples for Initial Selection: Submit manufacturer's color charts consisting of units or sections of units showing the full range of colors, textures, and patterns

available.

a. Number of Samples: Submit one full set(s) of available choices where color, pattern, texture, or similar characteristics are required to be selected from manufacturer's product line. Architect will return submittal with options selected.

b. Note that color selection submittals may have to be submitted concurrently to provide context for selection. Coordinate with Architect.

6. Samples for Verification: Submit full-size units or Samples of size indicated, prepared from same material to be used for the Work, cured and finished in manner specified, and physically identical with material or product proposed for use, and that show full range of color and texture variations expected. Samples include, but are not limited to, the following: partial sections of manufactured or fabricated components; small cuts or containers of materials; complete units of repetitively used materials; swatches showing color, texture, and pattern; color range sets; and components used for independent testing and inspection.

a. Number of Samples: Submit three sets of Samples. Architect will retain two Sample sets; remainder will be returned.

1) If variation in color, pattern, texture, or other characteristic is inherent in material or product represented by a Sample, submit at least three sets of paired units that show approximate limits of variations.

E. Coordination Drawings Submittals: Comply with requirements specified in Section 01 31 00 "Project Management and Coordination."

F. Contractor's Construction Schedule: Comply with requirements specified in Section 01 32 00 "Construction Progress Documentation."

G. Application for Payment and Schedule of Values: Comply with requirements specified in Section 01 29 00 "Payment Procedures.

H. Test and Inspection Reports and Schedule of Tests and Inspections Submittals: Comply with requirements specified in Section 01 40 00 "Quality Requirements."

I. Closeout Submittals and Maintenance Material Submittals: Comply with requirements specified in Section 01 77 00 "Closeout Procedures."

J. Maintenance Data: Comply with requirements specified in Section 01 78 23 "Operation and Maintenance Data."

K. Qualification Data: Prepare written information that demonstrates capabilities and experience of firm or person. Include lists of completed projects with project names and addresses, contact information of architects and owners, and other information specified.

L. Welding Certificates: Prepare written certification that welding procedures and personnel comply with requirements in the Contract Documents. Submit record of Welding Procedure Specification and Procedure Qualification Record on AWS forms. Include names of firms and personnel certified.

M. Installer Certificates: Submit written statements on manufacturer's letterhead certifying that Installer complies with requirements in the Contract Documents and, where

required, is authorized by manufacturer for this specific Project.

N. Manufacturer Certificates: Submit written statements on manufacturer's letterhead certifying that manufacturer complies with requirements in the Contract Documents. Include evidence of manufacturing experience where required.

O. Product Certificates: Submit written statements on manufacturer's letterhead certifying that product complies with requirements in the Contract Documents.

P. Material Certificates: Submit written statements on manufacturer's letterhead certifying that material complies with requirements in the Contract Documents.

Q. Material Test Reports: Submit reports written by a qualified testing agency, on testing agency's standard form, indicating and interpreting test results of material for compliance with requirements in the Contract Documents.

R. Product Test Reports: Submit written reports indicating that current product produced by manufacturer complies with requirements in the Contract Documents. Base reports on evaluation of tests performed by manufacturer and witnessed by a qualified testing agency, or on comprehensive tests performed by a qualified testing agency.

S. Research Reports: Submit written evidence, from a model code organization acceptable to authorities having jurisdiction, that product complies with building code in effect for Project.

T. Schedule of Tests and Inspections: Comply with requirements specified in Section 01 40 00 "Quality Requirements."

U. Preconstruction Test Reports: Submit reports written by a qualified testing agency, on testing agency's standard form, indicating and interpreting results of tests performed before installation of product, for compliance with performance requirements in the Contract Documents.

V. Compatibility Test Reports: Submit reports written by a qualified testing agency, on testing agency's standard form, indicating and interpreting results of compatibility tests performed before installation of product. Include written recommendations for primers and substrate preparation needed for adhesion.

W. Field Test Reports: Submit written reports indicating and interpreting results of field tests performed either during installation of product or after product is installed in its final location, for compliance with requirements in the Contract Documents.

X. Design Data: Prepare and submit written and graphic information, including, but not limited to, performance and design criteria, list of applicable codes and regulations, and calculations. Include list of assumptions and other performance and design criteria and a summary of loads. Include load diagrams if applicable. Provide name and version of software, if any, used for calculations. Include page numbers.

2.2 DELEGATED-DESIGN SERVICES

A. Performance and Design Criteria: Where professional design services or certifications by a design professional are specifically required of Contractor by the Contract Documents, provide products and systems complying with specific performance and design criteria indicated.
   1. If criteria indicated are not sufficient to perform services or certification required, submit a written request for additional information to Architect.

B. Delegated-Design Services Certification: In addition to Shop Drawings, Product Data, and other required submittals, submit digitally signed PDF electronic file paper copies of certificate, signed and sealed by the responsible design professional, for each product and system specifically assigned to Contractor to be designed or certified by a design professional.
   1. Indicate that products and systems comply with performance and design criteria in the Contract Documents. Include list of codes, loads, and other factors used in performing these services.

PART 3 - EXECUTION

3.1 CONTRACTOR'S REVIEW

A. Action and Informational Submittals: Review each submittal and check for coordination with other Work of the Contract and for compliance with the Contract Documents. Note corrections and field dimensions. Mark with approval stamp before submitting to Architect.

B. Project Closeout and Maintenance Material Submittals: See requirements in Section 01 77 00 "Closeout Procedures."

C. Approval Stamp: Stamp each submittal with a uniform, approval stamp. Include Project name and location, submittal number, Specification Section title and number, name of reviewer, date of Contractor's approval, and statement certifying that submittal has been reviewed, checked, and approved for compliance with the Contract Documents.

3.2 ARCHITECT'S ACTION

A. General: Architect will not review submittals that do not bear Contractor's approval stamp and will return them without action.

B. Action Submittals: Architect will review each submittal, make marks to indicate corrections or revisions required, and return it. Architect will stamp each submittal with an action stamp and will mark stamp appropriately to indicate action.

C. Informational Submittals: Architect will review each submittal and will not return it, or will return it if it does not comply with requirements. Architect will forward each submittal to appropriate party.

D. Incomplete submittals are unacceptable, will be considered nonresponsive, and will be returned for resubmittal without review.

E. Submittals not required by the Contract Documents may not be reviewed and may be discarded.

END OF SECTION 01 33 00

SECTION 01 40 00 - QUALITY REQUIREMENTS

PART 1 - GENERAL

1.1 SUMMARY

A. Section includes administrative and procedural requirements for quality assurance and quality control.

B. Testing and inspecting services are required to verify compliance with requirements specified or indicated. These services do not relieve Contractor of responsibility for compliance with the Contract Document requirements.
   1. Specified tests, inspections, and related actions do not limit Contractor's other quality-assurance and -control procedures that facilitate compliance with the Contract Document requirements.
   2. Requirements for Contractor to provide quality-assurance and -control services required by Architect, Owner, or authorities having jurisdiction are not limited by provisions of this Section.
   3. Specific test and inspection requirements are not specified in this Section.

1.2 DEFINITIONS

A. Quality-Assurance Services: Activities, actions, and procedures performed before and during execution of the Work to guard against defects and deficiencies and substantiate that proposed construction will comply with requirements.

B. Mockups: Full-size physical assemblies that are constructed on-site. Mockups are constructed to verify selections made under Sample submittals; to demonstrate aesthetic effects and, where indicated, qualities of materials and execution; to review coordination, testing, or operation; to show interface between dissimilar materials; and to demonstrate compliance with specified installation tolerances. Mockups are not Samples. Unless otherwise indicated, approved mockups establish the standard by which the Work will be judged.
   1. Laboratory Mockups: Full-size physical assemblies constructed at testing facility to verify performance characteristics.

C. Preconstruction Testing: Tests and inspections performed specifically for Project before products and materials are incorporated into the Work, to verify performance or compliance with specified criteria.

D. Product Testing: Tests and inspections that are performed by an NRTL, an NVLAP, or a testing agency qualified to conduct product testing and acceptable to authorities having jurisdiction, to establish product performance and compliance with specified requirements.

E. Source Quality-Control Testing: Tests and inspections that are performed at the source, e.g., plant, mill, factory, or shop.

F. Field Quality-Control Testing: Tests and inspections that are performed on-site for installation of the Work and for completed Work.

G. Testing Agency: An entity engaged to perform specific tests, inspections, or both. Testing laboratory shall mean the same as testing agency.

H. Installer/Applicator/Erector: Contractor or another entity engaged by Contractor as an employee, Subcontractor, or Sub-subcontractor, to perform a particular construction operation, including installation, erection, application, and similar operations.
   1. Use of trade-specific terminology in referring to a trade or entity does not require that certain construction activities be performed by accredited or unionized individuals, or that requirements specified apply exclusively to specific trade(s).

1.3 CONFLICTING REQUIREMENTS

A. Referenced Standards: If compliance with two or more standards is specified and the standards establish different or conflicting requirements for minimum quantities or quality levels, comply with the most stringent requirement. Refer conflicting requirements that are different, but apparently equal, to Architect for a decision before proceeding.

B. Minimum Quantity or Quality Levels: The quantity or quality level shown or specified shall be the minimum provided or performed. The actual installation may comply exactly with the minimum quantity or quality specified, or it may exceed the minimum within reasonable limits. To comply with these requirements, indicated numeric values are minimum or maximum, as appropriate, for the context of requirements. Refer uncertainties to Architect for a decision before proceeding.

1.4 REPORTS AND DOCUMENTS

A. Test and Inspection Reports: Prepare and submit certified written reports specified in other Sections. Include the following:
   1. Date of issue.
   2. Project title and number.
   3. Name, address, and telephone number of testing agency.
   4. Dates and locations of samples and tests or inspections.
   5. Names of individuals making tests and inspections.
   6. Description of the Work and test and inspection method.
   7. Identification of product and Specification Section.
   8. Complete test or inspection data.
   9. Test and inspection results and an interpretation of test results.
   10. Record of temperature and weather conditions at time of sample taking and testing and inspecting.
   11. Comments or professional opinion on whether tested or inspected Work complies with the Contract Document requirements.
   12. Name and signature of laboratory inspector.
   13. Recommendations on retesting and reinspecting.

B. Manufacturer's Field Reports: Prepare written information documenting tests and

inspections specified in other Sections. Include the following:
1. Name, address, and telephone number of representative making report.
2. Statement on condition of substrates and their acceptability for installation of product.
3. Summary of installation procedures being followed, whether they comply with requirements and, if not, what corrective action was taken.
4. Results of operational and other tests and a statement of whether observed performance complies with requirements.
5. Other required items indicated in individual Specification Sections.

1.5 QUALITY ASSURANCE

A. General: Qualifications paragraphs in this article establish the minimum qualification levels required; individual Specification Sections specify additional requirements.

B. Manufacturer Qualifications: A firm experienced in manufacturing products or systems similar to those indicated for this Project and with a record of successful in-service performance, as well as sufficient production capacity to produce required units.

C. Fabricator Qualifications: A firm experienced in producing products similar to those indicated for this Project and with a record of successful in-service performance, as well as sufficient production capacity to produce required units.

D. Installer Qualifications: A firm or individual experienced in installing, erecting, or assembling work similar in material, design, and extent to that indicated for this Project, whose work has resulted in construction with a record of successful in-service performance.

E. Professional Engineer Qualifications: A professional engineer who is legally qualified to practice in jurisdiction where Project is located and who is experienced in providing engineering services of the kind indicated. Engineering services are defined as those performed for installations of the system, assembly, or product that are similar in material, design, and extent to those indicated for this Project.

F. Manufacturer's Representative Qualifications: An authorized representative of manufacturer who is trained and approved by manufacturer to observe and inspect installation of manufacturer's products that are similar in material, design, and extent to those indicated for this Project.

G. Mockups: Before installing portions of the Work requiring mockups, build mockups for each form of construction and finish required to comply with the following requirements, using materials indicated for the completed Work:
1. Build mockups in location and of size indicated or, if not indicated, as directed by Architect.
2. Notify Architect seven days in advance of dates and times when mockups will be constructed.
3. Demonstrate the proposed range of aesthetic effects and workmanship.
4. Obtain Architect's approval of mockups before starting work, fabrication, or construction.
    a. Allow seven days for initial review and each re-review of each mockup.

5. Maintain mockups during construction in an undisturbed condition as a standard for judging the completed Work.
6. Demolish and remove mockups when directed unless otherwise indicated.

1.6 QUALITY CONTROL

A. Owner Responsibilities: Where quality-control services are indicated as Owner's responsibility, Owner will engage a qualified testing agency to perform these services.
   1. Owner will furnish Contractor with names, addresses, and telephone numbers of testing agencies engaged and a description of types of testing and inspecting they are engaged to perform.
   2. Costs for retesting and reinspecting construction that replaces or is necessitated by work that failed to comply with the Contract Documents will be charged to Contractor.
   3. Quality-Control Services that are the Owner’s responsibility are as follows:
      a. Testing identified by structural engineer’s General Notes and drawings.
      b. Inspection and Tests required by the Authority with Jurisdiction.
      c. Initial non-destructive test/inspection of roofing unless installation fails the test. Test is at Owner’s discretion.

B. Contractor Responsibilities: Tests and inspections not explicitly assigned to Owner are Contractor's responsibility. Perform additional quality-control activities required to verify that the Work complies with requirements, whether specified or not.
   1. Where services are indicated as Contractor's responsibility, engage a qualified testing agency to perform these quality-control services.
      a. Contractor shall not employ same entity engaged by Owner, unless agreed to in writing by Owner.
   2. Notify testing agencies at least 24 hours in advance of time when Work that requires testing or inspecting will be performed.
   3. Where quality-control services are indicated as Contractor's responsibility, submit a certified written report, in duplicate, of each quality-control service.
   4. Testing and inspecting requested by Contractor and not required by the Contract Documents are Contractor's responsibility.
   5. Submit additional copies of each written report directly to authorities having jurisdiction, when they so direct.

C. Manufacturer's Field Services: Where indicated, engage a manufacturer's representative to observe and inspect the Work. Manufacturer's representative's services include examination of substrates and conditions, verification of materials, inspection of completed portions of the Work, and submittal of written reports.

D. Retesting/Reinspecting: Regardless of whether original tests or inspections were Contractor's responsibility, provide quality-control services, including retesting and reinspecting, for construction that replaced Work that failed to comply with the Contract Documents.

E. Testing Agency Responsibilities: Cooperate with Architect and Contractor in performance of duties. Provide qualified personnel to perform required tests and inspections.
   1. Notify Architect and Contractor promptly of irregularities or deficiencies observed

in the Work during performance of its services.
2. Determine the location from which test samples will be taken and in which in-situ tests are conducted.
3. Conduct and interpret tests and inspections and state in each report whether tested and inspected work complies with or deviates from requirements.
4. Submit a certified written report, in duplicate, of each test, inspection, and similar quality-control service through Contractor.
5. Do not release, revoke, alter, or increase the Contract Document requirements or approve or accept any portion of the Work.
6. Do not perform any duties of Contractor.

F. Associated Services: Cooperate with agencies performing required tests, inspections, and similar quality-control services, and provide reasonable auxiliary services as requested. Notify agency sufficiently in advance of operations to permit assignment of personnel. Provide the following:
1. Access to the Work.
2. Incidental labor and facilities necessary to facilitate tests and inspections.
3. Adequate quantities of representative samples of materials that require testing and inspecting. Assist agency in obtaining samples.
4. Facilities for storage and field curing of test samples.
5. Preliminary design mix proposed for use for material mixes that require control by testing agency.
6. Security and protection for samples and for testing and inspecting equipment at Project site.

G. Coordination: Coordinate sequence of activities to accommodate required quality-assurance and -control services with a minimum of delay and to avoid necessity of removing and replacing construction to accommodate testing and inspecting.
1. Schedule times for tests, inspections, obtaining samples, and similar activities.

1.7 SPECIAL TESTS AND INSPECTIONS

A. Special Tests and Inspections: Conducted by a qualified special inspector as required by authorities having jurisdiction as indicated in the structural notes, as indicated in individual Specification Sections and drawings and as follows:
1. Notifying Architect and Contractor promptly of irregularities and deficiencies observed in the Work during performance of its services.
2. Submitting a certified written report of each test, inspection, and similar quality-control service to Architect with copy to Contractor and to authorities having jurisdiction.
3. Submitting a final report of special tests and inspections at Substantial Completion, which includes a list of unresolved deficiencies.
4. Interpreting tests and inspections and stating in each report whether tested and inspected work complies with or deviates from the Contract Documents.
5. Retesting and reinspecting corrected work.

PART 2 - PRODUCTS (Not Used)

PART 3 - EXECUTION

3.1 TEST AND INSPECTION LOG

A. Test and Inspection Log: Prepare a record of tests and inspections. Include the following:
   1. Date test or inspection was conducted.
   2. Description of the Work tested or inspected.
   3. Date test or inspection results were transmitted to Architect.
   4. Identification of testing agency or special inspector conducting test or inspection.

B. Maintain log at Project site. Post changes and revisions as they occur. Provide access to test and inspection log for Architect's reference during normal working hours.

3.2 REPAIR AND PROTECTION

A. General: On completion of testing, inspecting, sample taking, and similar services, repair damaged construction and restore substrates and finishes.
   1. Provide materials and comply with installation requirements specified in other Specification Sections or matching existing substrates and finishes. Restore patched areas and extend restoration into adjoining areas with durable seams that are as invisible as possible. Comply with the Contract Document requirements for cutting and patching in Section 01 73 00 "Execution."

B. Protect construction exposed by or for quality-control service activities.

C. Repair and protection are Contractor's responsibility, regardless of the assignment of responsibility for quality-control services.

END OF SECTION 01 40 00

SECTION 01 42 00 - REFERENCES

PART 1 - GENERAL

1.1 DEFINITIONS

A. General: Basic Contract definitions are included in the Conditions of the Contract.

B. "Approved": When used to convey Architect's action on Contractor's submittals, applications, and requests, "approved" is limited to Architect's duties and responsibilities as stated in the Conditions of the Contract.

C. "Directed": A command or instruction by Architect. Other terms including "requested," "authorized," "selected," "required," and "permitted" have the same meaning as "directed."

D. "Indicated": Requirements expressed by graphic representations or in written form on Drawings, in Specifications, and in other Contract Documents. Other terms including "shown," "noted," "scheduled," and "specified" have the same meaning as "indicated."

E. "Regulations": Laws, ordinances, statutes, and lawful orders issued by authorities having jurisdiction, and rules, conventions, and agreements within the construction industry that control performance of the Work.

F. "Furnish": Supply and deliver to Project site, ready for unloading, unpacking, assembly, installation, and similar operations.

G. "Install": Unload, temporarily store, unpack, assemble, erect, place, anchor, apply, work to dimension, finish, cure, protect, clean, and similar operations at Project site.

H. "Provide": Furnish and install, complete and ready for the intended use.

I. "Project Site": Space available for performing construction activities. The extent of Project site is shown on Drawings and may or may not be identical with the description of the land on which Project is to be built.

1.2 INDUSTRY STANDARDS

A. Applicability of Standards: Unless the Contract Documents include more stringent requirements, applicable construction industry standards have the same force and effect as if bound or copied directly into the Contract Documents to the extent referenced. Such standards are made a part of the Contract Documents by reference.

B. Publication Dates: Comply with standards in effect as of date of the Contract Documents unless otherwise indicated.

C. Copies of Standards: Each entity engaged in construction on Project should be familiar with industry standards applicable to its construction activity. Copies of applicable

standards are not bound with the Contract Documents.

1. Where copies of standards are needed to perform a required construction activity, obtain copies directly from publication source.

1.3 ABBREVIATIONS AND ACRONYMS

A. Industry Organizations: Where abbreviations and acronyms are used in Specifications or other Contract Documents, they shall mean the recognized name of the entities in the following list.

1. AABC - Associated Air Balance Council; www.aabc.com.
2. AAMA - American Architectural Manufacturers Association; www.aamanet.org.
3. AAPFCO - Association of American Plant Food Control Officials; www.aapfco.org.
4. AASHTO - American Association of State Highway and Transportation Officials; www.transportation.org.
5. AATCC - American Association of Textile Chemists and Colorists; www.aatcc.org.
6. ABMA - American Bearing Manufacturers Association; www.americanbearings.org.
7. ABMA - American Boiler Manufacturers Association; www.abma.com.
8. ACI - American Concrete Institute; (Formerly: ACI International); www.concrete.org
9. ACPA - American Concrete Pipe Association; www.concrete-pipe.org.
10. AEIC - Association of Edison Illuminating Companies, Inc. (The); www.aeic.org.
11. AF&PA - American Forest & Paper Association; www.afandpa.org.
12. AGA - American Gas Association; www.aga.org.
13. AHAM - Association of Home Appliance Manufacturers; www.aham.org.
14. AHRI - Air-Conditioning, Heating, and Refrigeration Institute (The); www.ahrinet.org.
15. AI - Asphalt Institute; www.asphaltinstitute.org.
16. AIA - American Institute of Architects (The); www.aia.org.
17. AISC - American Institute of Steel Construction; www.aisc.org.
18. AISI - American Iron and Steel Institute; www.steel.org.
19. AITC - American Institute of Timber Construction; www.aitc-glulam.org.
20. AMCA - Air Movement and Control Association International, Inc.; www.amca.org.
21. ANSI - American National Standards Institute; www.ansi.org.
22. AOSA - Association of Official Seed Analysts, Inc.; www.aosaseed.com.
23. APA - APA - The Engineered Wood Association; www.apawood.org.
24. APA - Architectural Precast Association; www.archprecast.org.
25. API - American Petroleum Institute; www.api.org.
26. ARI - Air-Conditioning & Refrigeration Institute; (See AHRI).
27. ARI - American Refrigeration Institute; (See AHRI).
28. ARMA - Asphalt Roofing Manufacturers Association; www.asphaltroofing.org.
29. ASCE - American Society of Civil Engineers; www.asce.org.
30. ASCE/SEI - American Society of Civil Engineers/Structural Engineering Institute; (See ASCE).
31. ASHRAE - American Society of Heating, Refrigerating and Air-Conditioning Engineers; www.ashrae.org.
32. ASME - ASME International; (American Society of Mechanical Engineers);

www.asme.org.
33. ASSE - American Society of Safety Engineers (The); www.asse.org.
34. ASSE - American Society of Sanitary Engineering; www.asse-plumbing.org.
35. ASTM - ASTM International; www.astm.org.
36. ATIS - Alliance for Telecommunications Industry Solutions; www.atis.org.
37. AWEA - American Wind Energy Association; www.awea.org.
38. AWI - Architectural Woodwork Institute; www.awinet.org.
39. AWMAC - Architectural Woodwork Manufacturers Association of Canada; www.awmac.com.
40. AWPA - American Wood Protection Association; www.awpa.com.
41. AWS - American Welding Society; www.aws.org.
42. AWWA - American Water Works Association; www.awwa.org.
43. BHMA - Builders Hardware Manufacturers Association; www.buildershardware.com.
44. BIA - Brick Industry Association (The); www.gobrick.com.
45. BICSI - BICSI, Inc.; www.bicsi.org.
46. BIFMA - BIFMA International; (Business and Institutional Furniture Manufacturer's Association); www.bifma.org.
47. BISSC - Baking Industry Sanitation Standards Committee; www.bissc.org.
48. BWF - Badminton World Federation; (Formerly: International Badminton Federation); www.bissc.org.
49. CDA - Copper Development Association; www.copper.org.
50. CE - Conformite Europeenne; http://ec.europa.eu/growth/single-market/ce-marking/
51. CEA - Canadian Electricity Association; www.electricity.ca.
52. CEA - Consumer Electronics Association; www.ce.org.
53. CFFA - Chemical Fabrics and Film Association, Inc.; www.chemicalfabricsandfilm.com.
54. CFSEI - Cold-Formed Steel Engineers Institute; www.cfsei.org.
55. CGA - Compressed Gas Association; www.cganet.com.
56. CIMA - Cellulose Insulation Manufacturers Association; www.cellulose.org.
57. CISCA - Ceilings & Interior Systems Construction Association; www.cisca.org.
58. CISPI - Cast Iron Soil Pipe Institute; www.cispi.org.
59. CLFMI - Chain Link Fence Manufacturers Institute; www.chainlinkinfo.org.
60. CPA - Composite Panel Association; www.pbmdf.com.
61. CRI - Carpet and Rug Institute (The); www.carpet-rug.org.
62. CRRC - Cool Roof Rating Council; www.coolroofs.org.
63. CRSI - Concrete Reinforcing Steel Institute; www.crsi.org.
64. CSA - Canadian Standards Association; www.csa.ca.
65. CSA - CSA International; (Formerly: IAS - International Approval Services); www.csa-international.org.
66. CSI - Construction Specifications Institute (The); www.csinet.org.
67. CSSB - Cedar Shake & Shingle Bureau; www.cedarbureau.org.
68. CTI - Cooling Technology Institute; (Formerly: Cooling Tower Institute); www.cti.org.
69. CWC - Composite Wood Council; (See CPA).
70. DASMA - Door and Access Systems Manufacturers Association; www.dasma.com.
71. DHI - Door and Hardware Institute; www.dhi.org.
72. ECA - Electronic Components Association; (See ECIA).
73. ECAMA - Electronic Components Assemblies & Materials Association; (See

ECIA).
74. ECIA - Electronic Components Industry Association; www.eciaonline.org.
75. EIA - Electronic Industries Alliance; (See TIA).
76. EIMA - EIFS Industry Members Association; www.eima.com.
77. EJMA - Expansion Joint Manufacturers Association, Inc.; www.ejma.org.
78. ESD - ESD Association; (Electrostatic Discharge Association); www.esda.org .
79. ESDS – Evergreen Sustainable Development Standard.
80. ESTA - Entertainment Services and Technology Association; (See PLASA).
81. ETL - Intertek (See Intertek); www.intertek.com.
82. EVO - Efficiency Valuation Organization; www.evo-world.org.
83. FCI - Fluid Controls Institute; www.fluidcontrolsinstitute.org.
84. FIBA - Federation Internationale de Basketball; (The International Basketball Federation); www.fiba.com.
85. FIVB - Federation Internationale de Volleyball; (The International Volleyball Federation); www.fivb.org.
86. FM Approvals - FM Approvals LLC; www.fmglobal.com.
87. FM Global - FM Global; (Formerly: FMG - FM Global); www.fmglobal.com.
88. FRSA - Florida Roofing, Sheet Metal & Air Conditioning Contractors Association, Inc.; www.floridaroof.com.
89. FSA - Fluid Sealing Association; www.fluidsealing.com.
90. FSC - Forest Stewardship Council U.S.; www.fscus.org.
91. GA - Gypsum Association; www.gypsum.org.
92. GANA - Glass Association of North America; www.glasswebsite.com.
93. GS - Green Seal; www.greenseal.org.
94. HI - Hydraulic Institute; www.pumps.org.
95. HI/GAMA - Hydronics Institute/Gas Appliance Manufacturers Association; (See AHRI).
96. HMMA - Hollow Metal Manufacturers Association; (See NAAMM).
97. HPVA - Hardwood Plywood & Veneer Association; www.hpva.org.
98. HPW - H. P. White Laboratory, Inc.; www.hpwhite.com.
99. IAPSC - International Association of Professional Security Consultants; www.iapsc.org.
100. IAS - International Accreditation Service; www.iasonline.org.
101. IAS - International Approval Services; (See CSA).
102. ICBO - International Conference of Building Officials; (See ICC).
103. ICC - International Code Council; www.iccsafe.org.
104. ICEA - Insulated Cable Engineers Association, Inc.; www.icea.net.
105. ICPA - International Cast Polymer Alliance; www.icpa-hq.org.
106. ICRI - International Concrete Repair Institute, Inc.; www.icri.org.
107. IEC - International Electrotechnical Commission; www.iec.ch.
108. IEEE - Institute of Electrical and Electronics Engineers, Inc. (The); www.ieee.org.
109. IES - Illuminating Engineering Society; (Formerly: Illuminating Engineering Society of North America); www.ies.org.
110. IESNA - Illuminating Engineering Society of North America; (See IES).
111. IEST - Institute of Environmental Sciences and Technology; www.iest.org.
112. IGMA - Insulating Glass Manufacturers Alliance; www.igmaonline.org.
113. IGSHPA - International Ground Source Heat Pump Association; www.igshpa.okstate.edu.
114. ILI - Indiana Limestone Institute of America, Inc.; www.iliai.com.
115. Intertek - Intertek Group; (Formerly: ETL SEMCO; Intertek Testing Service NA); www.intertek.com.

116. ISA - International Society of Automation (The); (Formerly: Instrumentation, Systems, and Automation Society); www.isa.org.
117. ISAS - Instrumentation, Systems, and Automation Society (The); (See ISA).
118. ISFA - International Surface Fabricators Association; (Formerly: International Solid Surface Fabricators Association); www.isfanow.org.
119. ISO - International Organization for Standardization; www.iso.org.
120. ISSFA - International Solid Surface Fabricators Association; (See ISFA).
121. ITU - International Telecommunication Union; www.itu.int/home.
122. KCMA - Kitchen Cabinet Manufacturers Association; www.kcma.org.
123. LMA - Laminating Materials Association; (See CPA).
124. LPI - Lightning Protection Institute; www.lightning.org.
125. MBMA - Metal Building Manufacturers Association; www.mbma.com.
126. MCA - Metal Construction Association; www.metalconstruction.org.
127. MFMA - Maple Flooring Manufacturers Association, Inc.; www.maplefloor.org.
128. MFMA - Metal Framing Manufacturers Association, Inc.; www.metalframingmfg.org.
129. MHIA - Material Handling Industry of America; www.mhia.org.
130. MIA - Marble Institute of America; www.marble-institute.com.
131. MMPA - Moulding & Millwork Producers Association; www.wmmpa.com.
132. MPI - Master Painters Institute; www.paintinfo.com.
133. MSS - Manufacturers Standardization Society of The Valve and Fittings Industry Inc.; www.mss-hq.org.
134. NAAMM - National Association of Architectural Metal Manufacturers; www.naamm.org.
135. NACE - NACE International; (National Association of Corrosion Engineers International); www.nace.org.
136. NADCA - National Air Duct Cleaners Association; www.nadca.com.
137. NAIMA - North American Insulation Manufacturers Association; www.naima.org.
138. NBGQA - National Building Granite Quarries Association, Inc.; www.nbgqa.com.
139. NBI - New Buildings Institute; www.newbuildings.org.
140. NCAA - National Collegiate Athletic Association (The); www.ncaa.org.
141. NCMA - National Concrete Masonry Association; www.ncma.org.
142. NEBB - National Environmental Balancing Bureau; www.nebb.org.
143. NECA - National Electrical Contractors Association; www.necanet.org.
144. NeLMA - Northeastern Lumber Manufacturers Association; www.nelma.org.
145. NEMA - National Electrical Manufacturers Association; www.nema.org.
146. NETA - InterNational Electrical Testing Association; www.netaworld.org.
147. NFHS - National Federation of State High School Associations; www.nfhs.org.
148. NFPA - National Fire Protection Association; www.nfpa.org.
149. NFPA - NFPA International; (See NFPA).
150. NFRC - National Fenestration Rating Council; www.nfrc.org.
151. NHLA - National Hardwood Lumber Association; www.nhla.com.
152. NLGA - National Lumber Grades Authority; www.nlga.org.
153. NOFMA - National Oak Flooring Manufacturers Association; (See NWFA).
154. NOMMA - National Ornamental & Miscellaneous Metals Association; www.nomma.org.
155. NRCA - National Roofing Contractors Association; www.nrca.net.
156. NRMCA - National Ready Mixed Concrete Association; www.nrmca.org.
157. NSF - NSF International; www.nsf.org.
158. NSPE - National Society of Professional Engineers; www.nspe.org.
159. NSSGA - National Stone, Sand & Gravel Association; www.nssga.org.

160. NTMA - National Terrazzo & Mosaic Association, Inc. (The); www.ntma.com.
161. NWFA - National Wood Flooring Association; www.nwfa.org.
162. PCI - Precast/Prestressed Concrete Institute; www.pci.org.
163. PDI - Plumbing & Drainage Institute; www.pdionline.org.
164. PLASA - PLASA; (Formerly: ESTA - Entertainment Services and Technology Association); http://www.plasa.org.
165. RCSC - Research Council on Structural Connections; www.boltcouncil.org.
166. RFCI - Resilient Floor Covering Institute; www.rfci.com.
167. RIS - Redwood Inspection Service; www.redwoodinspection.com.
168. SAE - SAE International; www.sae.org.
169. SCTE - Society of Cable Telecommunications Engineers; www.scte.org.
170. SDI - Steel Deck Institute; www.sdi.org.
171. SDI - Steel Door Institute; www.steeldoor.org.
172. SEFA - Scientific Equipment and Furniture Association (The); www.sefalabs.com.
173. SEI/ASCE - Structural Engineering Institute/American Society of Civil Engineers; (See ASCE).
174. SIA - Security Industry Association; www.siaonline.org.
175. SJI - Steel Joist Institute; www.steeljoist.org.
176. SMA - Screen Manufacturers Association; www.smainfo.org.
177. SMACNA - Sheet Metal and Air Conditioning Contractors' National Association; www.smacna.org.
178. SMPTE - Society of Motion Picture and Television Engineers; www.smpte.org.
179. SPFA - Spray Polyurethane Foam Alliance; www.sprayfoam.org.
180. SPIB - Southern Pine Inspection Bureau; www.spib.org.
181. SPRI - Single Ply Roofing Industry; www.spri.org.
182. SRCC - Solar Rating & Certification Corporation; www.solar-rating.org.
183. SSINA - Specialty Steel Industry of North America; www.ssina.com.
184. SSPC - SSPC: The Society for Protective Coatings; www.sspc.org.
185. STI - Steel Tank Institute; www.steeltank.com.
186. SWI - Steel Window Institute; www.steelwindows.com.
187. SWPA - Submersible Wastewater Pump Association; www.swpa.org.
188. TCA - Tilt-Up Concrete Association; www.tilt-up.org.
189. TCNA - Tile Council of North America, Inc.; www.tileusa.com.
190. TEMA - Tubular Exchanger Manufacturers Association, Inc.; www.tema.org.
191. TIA - Telecommunications Industry Association (The); (Formerly: TIA/EIA - Telecommunications Industry Association/Electronic Industries Alliance); www.tiaonline.org.
192. TIA/EIA - Telecommunications Industry Association/Electronic Industries Alliance; (See TIA).
193. TMS - The Masonry Society; www.masonrysociety.org.
194. TPI - Truss Plate Institute; www.tpinst.org.
195. TPI - Turfgrass Producers International; www.turfgrasssod.org.
196. TRI - Tile Roofing Institute; www.tileroofing.org.
197. UL - Underwriters Laboratories Inc.; http://www.ul.com.
198. UNI - Uni-Bell PVC Pipe Association; www.uni-bell.org.
199. USAV - USA Volleyball; www.usavolleyball.org.
200. USGBC - U.S. Green Building Council; www.usgbc.org.
201. USITT - United States Institute for Theatre Technology, Inc.; www.usitt.org.
202. WASTEC - Waste Equipment Technology Association; www.wastec.org.
203. WCLIB - West Coast Lumber Inspection Bureau; www.wclib.org.

204. WCMA - Window Covering Manufacturers Association; www.wcmanet.org.
205. WDMA - Window & Door Manufacturers Association; www.wdma.com.
206. WI - Woodwork Institute; www.wicnet.org.
207. WSEC – Washington State Energy Code;
208. WSRCA - Western States Roofing Contractors Association; www.wsrca.com.
209. WWPA - Western Wood Products Association; www.wwpa.org.

B. Code Agencies: Where abbreviations and acronyms are used in Specifications or other Contract Documents, they shall mean the recognized name of the entities in the following list. This information is believed to be accurate as of the date of the Contract Documents.
   1. IAPMO - International Association of Plumbing and Mechanical Officials; www.iapmo.org.
   2. ICC - International Code Council; www.iccsafe.org.
   3. ICC-ES - ICC Evaluation Service, LLC; www.icc-es.org.

C. Federal Government Agencies: Where abbreviations and acronyms are used in Specifications or other Contract Documents, they shall mean the recognized name of the entities in the following list. Information is subject to change and is up to date as of the date of the Contract Documents.
   1. COE - Army Corps of Engineers; www.usace.army.mil.
   2. CPSC - Consumer Product Safety Commission; www.cpsc.gov.
   3. DOC - Department of Commerce; National Institute of Standards and Technology; www.nist.gov.
   4. DOD - Department of Defense; www.quicksearch.dla.mil.
   5. DOE - Department of Energy; www.energy.gov.
   6. EPA - Environmental Protection Agency; www.epa.gov.
   7. FAA - Federal Aviation Administration; www.faa.gov.
   8. FG - Federal Government Publications; www.gpo.gov/fdsys.
   9. GSA - General Services Administration; www.gsa.gov.
   10. HUD - Department of Housing and Urban Development; www.hud.gov.
   11. LBL - Lawrence Berkeley National Laboratory; Environmental Energy Technologies Division; www.eetd.lbl.gov.
   12. OSHA - Occupational Safety & Health Administration; www.osha.gov.
   13. SD - Department of State; www.state.gov.
   14. TRB - Transportation Research Board; National Cooperative Highway Research Program; The National Academies; www.trb.org.
   15. USDA - Department of Agriculture; Agriculture Research Service; U.S. Salinity Laboratory; www.ars.usda.gov.
   16. USDA - Department of Agriculture; Rural Utilities Service; www.usda.gov.
   17. USDOJ - Department of Justice; Office of Justice Programs; National Institute of Justice; www.ojp.usdoj.gov.
   18. USP - U.S. Pharmacopeial Convention; www.usp.org.
   19. USPS - United States Postal Service; www.usps.com.

D. Standards and Regulations: Where abbreviations and acronyms are used in Specifications or other Contract Documents, they shall mean the recognized name of the standards and regulations in the following list. This information is subject to change and is believed to be accurate as of the date of the Contract Documents.
   1. CFR - Code of Federal Regulations; Available from Government Printing Office; www.gpo.gov/fdsys.

2. DOD - Department of Defense; Military Specifications and Standards; Available from DLA Document Services; www.quicksearch.dla.mil.
3. DSCC - Defense Supply Center Columbus; (See FS).
4. FED-STD - Federal Standard; (See FS).
5. FS - Federal Specification; Available from DLA Document Services; www.quicksearch.dla.mil.
   a. Available from Defense Standardization Program; www.dsp.dla.mil.
   b. Available from General Services Administration; www.gsa.gov.
   c. Available from National Institute of Building Sciences/Whole Building Design Guide; www.wbdg.org/ccb.
6. MILSPEC - Military Specification and Standards; (See DOD).
7. USAB - United States Access Board; www.access-board.gov.
8. USATBCB - U.S. Architectural & Transportation Barriers Compliance Board; (See USAB).

E. State Government Agencies: Where abbreviations and acronyms are used in Specifications or other Contract Documents, they shall mean the recognized name of the entities in the following list. This information is subject to change and is believed to be accurate as of the date of the Contract Documents.
1. CBHF; State of California; Department of Consumer Affairs; Bureau of Electronic and Appliance Repair, Home Furnishings and Thermal Insulation; www.bearhfti.ca.gov.
2. CCR; California Code of Regulations; Office of Administrative Law; California Title 24 Energy Code; www.calregs.com.
3. CDHS; California Department of Health Services; (See CDPH).
4. CDPH; California Department of Public Health; Indoor Air Quality Program; www.cal-iaq.org.
5. CPUC; California Public Utilities Commission; www.cpuc.ca.gov.
6. SCAQMD; South Coast Air Quality Management District; www.aqmd.gov.
7. TFS; Texas A&M Forest Service; Sustainable Forestry and Economic Development; www.txforestservice.tamu.edu.

PART 2 - PRODUCTS (Not Used)

PART 3 - EXECUTION (Not Used)

END OF SECTION 01 42 00

SECTION 01 50 00 - TEMPORARY FACILITIES AND CONTROLS

PART 1 - GENERAL

1.1 SUMMARY

A. Section includes requirements for temporary utilities, support facilities, and security and protection facilities.

B. Related Requirements:
   1. Section 01 10 00 "Summary" for work restrictions and limitations on utility interruptions.

1.2 INFORMATIONAL SUBMITTALS

A. Site Plan: Show temporary facilities, staging areas, and parking areas for construction personnel.

B. Erosion- and Sedimentation-Control Plan: Show compliance with requirements of EPA Construction General Permit or authorities having jurisdiction, whichever is more stringent.

PART 2 - PRODUCTS

2.1 TEMPORARY FACILITIES

A. Storage and Fabrication Trailers and Sheds: Provide trailers and sheds as needed size, furnish, and equip to accommodate materials and equipment for construction operations. Coordinate location with Owner.

2.2 EQUIPMENT

A. Fire Extinguishers: Portable, UL rated; with class and extinguishing agent as required by locations and classes of fire exposures.

PART 3 - EXECUTION

3.1 INSTALLATION, GENERAL

A. Locate facilities where they will serve Project adequately and result in minimum interference with performance of the Work. Relocate and modify facilities as required by progress of the Work.

B. Provide each facility ready for use when needed to avoid delay. Do not remove until facilities are no longer needed or are replaced by authorized use of completed permanent facilities.

3.2 TEMPORARY UTILITY INSTALLATION

A. Temporary Utilities: Contractor shall arrange for all temporary utilities necessary for project.

B. Sanitary Facilities: Provide temporary toilets, wash facilities, and drinking water for use of construction personnel. Comply with requirements of authorities having jurisdiction for type, number, location, operation, and maintenance of fixtures and facilities.

3.3 SUPPORT FACILITIES INSTALLATION

A. Waste Disposal Facilities: Comply with requirements specified in Section 01 74 19 "Construction Waste Management and Disposal."

3.4 SECURITY AND PROTECTION FACILITIES INSTALLATION

A. Protection of Existing Facilities: Protect existing vegetation, equipment, structures, utilities, and other improvements on adjacent properties. Repair damage to existing facilities.

B. Environmental Protection: Provide protection, operate temporary facilities, and conduct construction as required to comply with environmental regulations and that minimize possible air, waterway, and subsoil contamination or pollution or other undesirable effects.

C. Temporary Erosion and Sedimentation Control: Comply with Temporary Erosion and Sedimentation Controls located in drawings.

D. Stormwater Control: Comply with requirements of authorities having jurisdiction. Provide barriers in and around excavations and subgrade construction to prevent flooding by runoff of stormwater from heavy rains.

E. Tree and Plant Protection: Install temporary fencing located as indicated or outside the drip line of trees to protect vegetation from damage from construction operations. Protect tree root systems from damage, flooding, and erosion.

F. Barricades, Warning Signs, and Lights: Comply with requirements of authorities having jurisdiction for erecting structurally adequate barricades, including warning signs and lighting. Use barricades to prevent residents and public from entering construction area while allowing for adequate access to units etc. Temporarily barricade unit front doors while maintaining access to back doors.

3.5 MOISTURE AND MOLD CONTROL

A. Contractor's Moisture Protection Plan: Avoid trapping water in finished work. Document visible signs of mold that may appear during construction.

3.6 OPERATION, TERMINATION, AND REMOVAL

A. Supervision: Enforce strict discipline in use of temporary facilities. To minimize waste and abuse, limit availability of temporary facilities to essential and intended uses.

B. Maintenance: Maintain facilities in good operating condition until removal.

END OF SECTION 01 50 00

SECTION 01 73 00 - EXECUTION

PART 1 - GENERAL

1.1 SUMMARY

A. Section includes general administrative and procedural requirements governing execution of the Work including, but not limited to, the following:

1. Construction layout.
2. Field engineering and surveying.
3. Installation of the Work.
4. Cutting and patching.
5. Coordination of Owner-installed products.
6. Progress cleaning.
7. Starting and adjusting.
8. Protection of installed construction.

1.2 QUALITY ASSURANCE

A. Cutting and Patching: Comply with requirements for and limitations on cutting and patching of construction elements.

1. Structural Elements: When cutting and patching structural elements, notify Architect of locations and details of cutting and await directions from Architect before proceeding. Shore, brace, and support structural element during cutting and patching. Do not cut and patch structural elements in a manner that could change their load-carrying capacity or increase deflection

2. Operational Elements: Do not cut and patch operating elements and related components in a manner that results in reducing their capacity to perform as intended or that results in increased maintenance or decreased operational life or safety.

3. Other Construction Elements: Do not cut and patch other construction elements or components in a manner that could change their load-carrying capacity, that results in reducing their capacity to perform as intended, or that results in increased maintenance or decreased operational life or safety.

4. Visual Elements: Do not cut and patch construction in a manner that results in visual evidence of cutting and patching. Do not cut and patch exposed construction in a manner that would, in Architect's opinion, reduce the building's aesthetic qualities. Remove and replace construction that has been cut and patched in a visually unsatisfactory manner.

PART 2 - PRODUCTS

2.1 MATERIALS

A. General: Comply with requirements specified in other Sections.

B. In-Place Materials: Use materials for patching identical to in-place materials. For exposed surfaces, use materials that visually match in-place adjacent surfaces to the fullest extent possible.

1. If identical materials are unavailable or cannot be used, use materials that, when installed, will provide a match acceptable to Architect for the visual and functional performance of in-place materials.

PART 3 - EXECUTION

3.1 EXAMINATION

A. Existing Conditions: The existence and location of underground and other utilities and construction indicated as existing are not guaranteed. Before beginning sitework, investigate and verify the existence and location of underground utilities, and other construction affecting the Work.

1. Before construction, verify the location and invert elevation at points of connection of sanitary sewer, storm sewer, and water-service piping; underground electrical services, and other utilities.
2. Furnish location data for work related to Project that must be performed by public utilities serving Project site.

B. Examination and Acceptance of Conditions: Before proceeding with each component of the Work, examine substrates, areas, and conditions, with Installer or Applicator present where indicated, for compliance with requirements for installation tolerances and other conditions affecting performance. Record observations.

1. Examine roughing-in for mechanical and electrical systems to verify actual locations of connections before equipment and fixture installation.
2. Examine walls, floors, and roofs for suitable conditions where products and systems are to be installed.
3. Verify compatibility with and suitability of substrates, including compatibility with existing finishes or primers.

C. Proceed with installation only after unsatisfactory conditions have been corrected. Proceeding with the Work indicates acceptance of surfaces and conditions.

3.2 PREPARATION

A. Existing Utility Information: Furnish information to local utility that is necessary to adjust, move, or relocate existing utility structures, utility poles, lines, services, or other utility appurtenances located in or affected by construction. Coordinate with authorities having jurisdiction.

B. Field Measurements: Take field measurements as required to fit the Work properly. Recheck measurements before installing each product. Where portions of the Work are indicated to fit to other construction, verify dimensions of other construction by field measurements before fabrication. Coordinate fabrication schedule with construction progress to avoid delaying the Work.

C. Space Requirements: Verify space requirements and dimensions of items shown diagrammatically on Drawings.

D. Review of Contract Documents and Field Conditions: Immediately on discovery of the need for clarification of the Contract Documents caused by differing field conditions outside the control of Contractor, submit a request for information to Architect according to requirements in Section 01 31 00 "Project Management and Coordination."

3.3 CONSTRUCTION LAYOUT

A. Verification: Before proceeding to lay out the Work, verify layout information shown on Drawings, in relation to the property survey and existing benchmarks. If discrepancies are discovered, notify Architect promptly.

B. Site Improvements: Locate and lay out site improvements, including pavements, grading, fill and topsoil placement, utility slopes, and rim and invert elevations.

C. Building Lines and Levels: Locate and lay out control lines and levels for structures, building foundations, column grids, and floor levels, including those required for mechanical and electrical work. Transfer survey markings and elevations for use with control lines and levels. Level foundations and piers from two or more locations.

D. Record Log: Maintain a log of layout control work. Record deviations from required lines and levels. Include beginning and ending dates and times of surveys, weather conditions, name and duty of each survey party member, and types of instruments and tapes used. Make the log available for reference by Architect.

3.4 FIELD ENGINEERING

A. Reference Points: Locate existing permanent benchmarks, control points, and similar reference points before beginning the Work. Preserve and protect permanent benchmarks and control points during construction operations.

B. Benchmarks: Establish and maintain a minimum of two permanent benchmarks on Project site, referenced to data established by survey control points. Comply with authorities having jurisdiction for type and size of benchmark.

1. Record benchmark locations, with horizontal and vertical data, on Project Record Documents.

3.5 INSTALLATION

A. General: Locate the Work and components of the Work accurately, in correct alignment and elevation, as indicated.

1. Make vertical work plumb and make horizontal work level.
2. Where space is limited, install components to maximize space available for maintenance and ease of removal for replacement.
3. Conceal pipes, ducts, and wiring in finished areas unless otherwise indicated.

B. Comply with manufacturer's written instructions and recommendations for installing products in applications indicated.

C. Install products at the time and under conditions that will ensure the best possible results. Maintain conditions required for product performance until Substantial Completion.

D. Conduct construction operations so no part of the Work is subjected to damaging operations or loading in excess of that expected during normal conditions of occupancy.

E. Sequence the Work and allow adequate clearances to accommodate movement of construction items on site and placement in permanent locations.

F. Tools and Equipment: Do not use tools or equipment that produce harmful noise levels.

G. Templates: Obtain and distribute to the parties involved templates for work specified to be factory prepared and field installed. Check Shop Drawings of other work to confirm that adequate provisions are made for locating and installing products to comply with indicated requirements.

H. Attachment: Provide blocking and attachment plates and anchors and fasteners of adequate size and number to securely anchor each component in place, accurately located and aligned with other portions of the Work. Where size and type of attachments are not indicated, verify size and type required for load conditions.

1. Mounting Heights: Where mounting heights are not indicated, mount components at heights directed by Architect.
2. Allow for building movement, including thermal expansion and contraction.
3. Coordinate installation of anchorages. Furnish setting drawings, templates, and directions for installing anchorages, including sleeves, concrete inserts, anchor bolts, and items with integral anchors, that are to be embedded in concrete or masonry. Deliver such items to Project site in time for installation.

I. Joints: Make joints of uniform width. Where joint locations in exposed work are not indicated, arrange joints for the best visual effect. Fit exposed connections together to form hairline joints.

J. Hazardous Materials: Use products, cleaners, and installation materials that are not considered hazardous.

3.6 CUTTING AND PATCHING

A. Cutting and Patching, General: Employ skilled workers to perform cutting and patching. Proceed with cutting and patching at the earliest feasible time, and complete without delay.

1. Cut in-place construction to provide for installation of other components or performance of other construction, and subsequently patch as required to restore surfaces to their original condition.

B. Existing Warranties: Remove, replace, patch, and repair materials and surfaces cut or damaged during installation or cutting and patching operations, by methods and with materials so as not to void existing warranties.

C. Temporary Support: Provide temporary support of work to be cut.

D. Protection: Protect in-place construction during cutting and patching to prevent damage. Provide protection from adverse weather conditions for portions of Project that might be exposed during cutting and patching operations.

E. Cutting: Cut in-place construction by sawing, drilling, breaking, chipping, grinding, and similar operations, including excavation, using methods least likely to damage elements retained or adjoining construction. If possible, review proposed procedures with original Installer; comply with original Installer's written recommendations.

1. In general, use hand or small power tools designed for sawing and grinding, not hammering and chopping. Cut holes and slots neatly to minimum size required, and with minimum disturbance of adjacent surfaces. Temporarily cover openings when not in use.
2. Finished Surfaces: Cut or drill from the exposed or finished side into concealed surfaces.
3. Concrete and Masonry: Cut using a cutting machine, such as an abrasive saw or a diamond-core drill.
4. Excavating and Backfilling: Comply with requirements in applicable Sections where required by cutting and patching operations.
5. Mechanical and Electrical Services: Cut off pipe or conduit in walls or partitions to be removed. Cap, valve, or plug and seal remaining portion of pipe or conduit to prevent entrance of moisture or other foreign matter after cutting.
6. Proceed with patching after construction operations requiring cutting are complete.

F. Patching: Patch construction by filling, repairing, refinishing, closing up, and similar operations following performance of other work. Patch with durable seams that are as

invisible as practicable. Provide materials and comply with installation requirements specified in other Sections, where applicable.

1. Inspection: Where feasible, test and inspect patched areas after completion to demonstrate physical integrity of installation.
2. Exposed Finishes: Restore exposed finishes of patched areas and extend finish restoration into retained adjoining construction in a manner that will minimize evidence of patching and refinishing. Repaint to nearest change in plane.
3. Floors and Walls: Where walls or partitions that are removed extend one finished area into another, patch and repair floor and wall surfaces in the new space. Provide an even surface of uniform finish, color, texture, and appearance. Remove in-place floor and wall coverings and replace with new materials, if necessary, to achieve uniform color and appearance.
4. Ceilings: Patch, repair, or rehang in-place ceilings as necessary to provide an even-plane surface of uniform appearance.
5. Exterior Building Enclosure: Patch components in a manner that restores enclosure to a weathertight condition and ensures thermal and moisture integrity of building enclosure.

G. Cleaning: Clean areas and spaces where cutting and patching are performed. Remove paint, mortar, oils, putty, and similar materials from adjacent finished surfaces.

3.7 PROGRESS CLEANING

A. General: Clean Project site and work areas daily, including common areas. Enforce requirements strictly. Dispose of materials lawfully.

1. Comply with requirements in NFPA 241 for removal of combustible waste materials and debris.
2. Do not hold waste materials more than seven days during normal weather or three days if the temperature is expected to rise above 80 deg F.
3. Containerize hazardous and unsanitary waste materials separately from other waste. Mark containers appropriately and dispose of legally, according to regulations.

B. Site: Maintain Project site free of waste materials and debris.

C. Work Areas: Clean areas where work is in progress to the level of cleanliness necessary for proper execution of the Work.

1. Remove liquid spills promptly.
2. Where dust would impair proper execution of the Work, broom-clean or vacuum the entire work area, as appropriate.

D. Installed Work: Keep installed work clean. Clean installed surfaces according to written instructions of manufacturer or fabricator of product installed, using only cleaning materials specifically recommended. If specific cleaning materials are not recommended, use cleaning materials that are not hazardous to health or property and that will not damage exposed surfaces.

E. Concealed Spaces: Remove debris from concealed spaces before enclosing the space.

F. Exposed Surfaces in Finished Areas: Clean exposed surfaces and protect as necessary to ensure freedom from damage and deterioration at time of Substantial Completion.

G. Waste Disposal: Do not bury or burn waste materials on-site. Do not wash waste materials down sewers or into waterways.

H. During handling and installation, clean and protect construction in progress and adjoining materials already in place. Apply protective covering where required to ensure protection from damage or deterioration at Substantial Completion.

I. Clean and provide maintenance on completed construction as frequently as necessary through the remainder of the construction period. Adjust and lubricate operable components to ensure operability without damaging effects.

J. Limiting Exposures: Supervise construction operations to assure that no part of the construction, completed or in progress, is subject to harmful, dangerous, damaging, or otherwise deleterious exposure during the construction period.

3.8 STARTING AND ADJUSTING

A. Start equipment and operating components to confirm proper operation. Remove malfunctioning units, replace with new units, and retest.

B. Adjust equipment for proper operation. Adjust operating components for proper operation without binding.

C. Test each piece of equipment to verify proper operation. Test and adjust controls and safeties. Replace damaged and malfunctioning controls and equipment.

D. Manufacturer's Field Service: Comply with qualification requirements in Section 01 40 00 "Quality Requirements"

3.9 PROTECTION OF INSTALLED CONSTRUCTION

A. Provide final protection and maintain conditions that ensure installed Work is without damage or deterioration at time of Substantial Completion.

B. Comply with manufacturer's written instructions for temperature and relative humidity.

END OF SECTION 017300

SECTION 01 74 19 - CONSTRUCTION WASTE MANAGEMENT AND DISPOSAL

PART 1 - GENERAL

1.1 SUMMARY

A. Section includes administrative and procedural requirements for the following:
   1. Salvaging nonhazardous demolition and construction waste.
   2. Recycling nonhazardous demolition and construction waste.
   3. Disposing of nonhazardous demolition and construction waste.

1.2 DEFINITIONS

A. Construction Waste: Building and site improvement materials and other solid waste resulting from construction, remodeling, renovation, or repair operations. Construction waste includes packaging.

B. Demolition Waste: Building and site improvement materials resulting from demolition or selective demolition operations.

C. Disposal: Removal off-site of demolition and construction waste and subsequent sale, recycling, reuse, or deposit in landfill or incinerator acceptable to authorities having jurisdiction.

D. Recycle: Recovery of demolition or construction waste for subsequent processing in preparation for reuse.

E. Salvage: Recovery of demolition or construction waste and subsequent sale or reuse in another facility.

F. Salvage and Reuse: Recovery of demolition or construction waste and subsequent incorporation into the Work.

1.3 PERFORMANCE REQUIREMENTS

A. General: Achieve end-of-Project rates for salvage/recycling of 75 percent by weight of total non-hazardous solid waste generated by the Work. Facilitate recycling and salvage of materials.

1.4 ACTION SUBMITTALS

A. Waste Management Plan: Submit plan within 30 days of date established for the Notice to Proceed.

1.5 INFORMATIONAL SUBMITTALS

A. Waste Reduction Progress Reports: Concurrent with each Application for Payment, submit report. Include the following information:
   1. Material category.
   2. Generation point of waste.
   3. Total quantity of waste in tons.
   4. Quantity of waste salvaged, both estimated and actual in tons.
   5. Quantity of waste recycled, both estimated and actual in tons.
   6. Total quantity of waste recovered (salvaged plus recycled) in tons.
   7. Total quantity of waste recovered (salvaged plus recycled) as a percentage of total waste.

B. Waste Reduction Calculations: Before request for Substantial Completion, submit calculated end-of-Project rates for salvage, recycling, and disposal as a percentage of total waste generated by the Work.

C. Records of Donations: Indicate receipt and acceptance of salvageable waste donated to individuals and organizations. Indicate whether organization is tax exempt.

D. Records of Sales: Indicate receipt and acceptance of salvageable waste sold to individuals and organizations. Indicate whether organization is tax exempt.

E. Recycling and Processing Facility Records: Indicate receipt and acceptance of recyclable waste by recycling and processing facilities licensed to accept them. Include manifests, weight tickets, receipts, and invoices.

F. Landfill and Incinerator Disposal Records: Indicate receipt and acceptance of waste by landfills and incinerator facilities licensed to accept them. Include manifests, weight tickets, receipts, and invoices.

1.6 WASTE MANAGEMENT PLAN

A. General: Develop a waste management plan according to ASTM E 1609 and requirements in this Section. Plan shall consist of waste identification, waste reduction work plan, and cost/revenue analysis. Indicate quantities by weight or volume, but use same units of measure throughout waste management plan.

B. Waste Identification: Indicate anticipated types and quantities of demolition site-clearing and construction waste generated by the Work. Include estimated quantities and assumptions for estimates.

C. Waste Reduction Work Plan: List each type of waste and whether it will be salvaged, recycled, or disposed of in landfill or incinerator. Include points of waste generation, total quantity of each type of waste, quantity for each means of recovery, and handling and transportation procedures.
   1. Salvaged Materials for Reuse: For materials that will be salvaged and reused in this Project, describe methods for preparing salvaged materials before incorporation into the Work.
   2. Salvaged Materials for Sale: For materials that will be sold to individuals and

organizations, include list of their names, addresses, and telephone numbers.
3. Salvaged Materials for Donation: For materials that will be donated to individuals and organizations, include list of their names, addresses, and telephone numbers.
4. Recycled Materials: Include list of local receivers and processors and type of recycled materials each will accept. Include names, addresses, and telephone numbers.
5. Disposed Materials: Indicate how and where materials will be disposed of. Include name, address, and telephone number of each landfill and incinerator facility.
6. Handling and Transportation Procedures: Include method that will be used for separating recyclable waste including sizes of containers, container labeling, and designated location where materials separation will be performed.

PART 2 - PRODUCTS (Not Used)

PART 3 - EXECUTION

3.1 PLAN IMPLEMENTATION

A. General: Implement approved waste management plan. Provide handling, containers, storage, signage, transportation, and other items as required to implement waste management plan during the entire duration of the Contract.

B. Training: Train workers, subcontractors, and suppliers on proper waste management procedures, as appropriate for the Work occurring at Project site.
1. Distribute waste management plan to everyone concerned within three days of submittal return.
2. Distribute waste management plan to entities when they first begin work on-site. Review plan procedures and locations established for salvage, recycling, and disposal.

C. Site Access and Temporary Controls: Conduct waste management operations to ensure minimum interference with roads, streets, walks, walkways, and other adjacent occupied and used facilities.
1. Designate and label specific areas on Project site necessary for separating materials that are to be salvaged, recycled, reused, donated, and sold.
2. Comply with Section 01 50 00 "Temporary Facilities and Controls" for controlling dust and dirt, environmental protection, and noise control.

3.2 SALVAGING DEMOLITION WASTE

A. Salvaged Items for Reuse in the Work:
1. Clean salvaged items.
2. Pack or crate items after cleaning. Identify contents of containers.
3. Store items in a secure area until installation.
4. Protect items from damage during transport and storage.

5. Install salvaged items to comply with installation requirements for new materials and equipment. Provide connections, supports, and miscellaneous materials necessary to make items functional for use indicated.

B. Salvaged Items for Sale and Donation: Not permitted on Project site.

C. Salvaged Items for Owner's Use:
1. Clean salvaged items.
2. Pack or crate items after cleaning. Identify contents of containers.
3. Store items in a secure area until delivery to Owner.
4. Transport items to Owner's storage area designated by Owner.
5. Protect items from damage during transport and storage.

3.3 RECYCLING DEMOLITION AND CONSTRUCTION WASTE, GENERAL

A. General: Recycle paper and beverage containers used by on-site workers.

B. Recycling Incentives: Revenues, savings, rebates, tax credits, and other incentives received for recycling waste materials shall be shared equally by Owner and Contractor.

3.4 RECYCLING DEMOLITION WASTE

A. Asphalt Paving: Break up and transport paving to asphalt-recycling facility.

B. Concrete: Remove reinforcement and other metals from concrete and sort with other metals.

C. Masonry: Remove metal reinforcement, anchors, and ties from masonry and sort with other metals.
1. Pulverize masonry to maximum 4-inch size.

D. Wood Materials: Sort and stack members according to size, type, and length. Separate lumber, engineered wood products, panel products, and treated wood materials.

E. Metals: Separate metals by type.
1. Structural Steel: Stack members according to size, type of member, and length.
2. Remove and dispose of bolts, nuts, washers, and other rough hardware.

F. Asphalt Shingle Roofing: Separate organic and glass-fiber asphalt shingles and felts. Remove and dispose of nails, staples, and accessories.

G. Gypsum Board: Stack large clean pieces on wood pallets or in container and store in a dry location. Remove edge trim and sort with other metals. Remove and dispose of fasteners.

H. Acoustical Ceiling Panels and Tile: Stack large clean pieces on wood pallets and store in a dry location.

I. Metal Suspension System: Separate metal members including trim, and other metals from acoustical panels and tile and sort with other metals.

J. Carpet: Roll large pieces tightly after removing debris, trash, adhesive, and tack strips.
   1. Store clean, dry carpet in a closed container or trailer provided by Carpet Reclamation Agency or carpet recycler.

K. Carpet Tile: Remove debris, trash, and adhesive.
   1. Stack tile on pallet and store clean, dry carpet in a closed container or trailer provided by Carpet Reclamation Agency or carpet recycler.

L. Piping: Reduce piping to straight lengths and store by type and size. Separate supports, hangers, valves, sprinklers, and other components by type and size.

M. Conduit: Reduce conduit to straight lengths and store by type and size.

3.5 RECYCLING CONSTRUCTION WASTE

A. Packaging:
   1. Cardboard and Boxes: Break down packaging into flat sheets. Bundle and store in a dry location.
   2. Polystyrene Packaging: Separate and bag materials.
   3. Pallets: As much as possible, require deliveries using pallets to remove pallets from Project site. For pallets that remain on-site, break down pallets into component wood pieces and comply with requirements for recycling wood.
   4. Crates: Break down crates into component wood pieces and comply with requirements for recycling wood.

B. Wood Materials:
   1. Clean Cut-Offs of Lumber: Grind or chip into small pieces.
   2. Clean Sawdust: Bag sawdust that does not contain painted or treated wood.

C. Gypsum Board: Stack large clean pieces on wood pallets or in container and store in a dry location.

3.6 DISPOSAL OF WASTE

A. General: Except for items or materials to be salvaged, recycled, or otherwise reused, remove waste materials from Project site and legally dispose of them in a landfill or incinerator acceptable to authorities having jurisdiction.
   1. Except as otherwise specified, do not allow waste materials that are to be disposed of accumulate on-site.
   2. Remove and transport debris in a manner that will prevent spillage on adjacent surfaces and areas.

B. Burning: Do not burn waste materials.

C. Disposal: Remove waste materials from Owner's property and legally dispose of them.

END OF SECTION 01 74 19

SECTION 01 77 00 - CLOSEOUT PROCEDURES

PART 1 - GENERAL

1.1 SUMMARY

A. Section includes administrative and procedural requirements for contract closeout, including, but not limited to, the following:
   1. Substantial Completion procedures.
   2. Final completion procedures.
   3. Warranties.
   4. Final cleaning.
   5. Repair of the Work.

B. Related Requirements:
   1. Section 01 78 23 "Operation and Maintenance Data" for operation and maintenance manual requirements.
   2. Section 01 78 39 "Project Record Documents" for submitting record Drawings, record Specifications, and record Product Data.
   3. Section 01 79 00 "Demonstration and Training" for requirements for instructing Owner's personnel.

1.2 ACTION SUBMITTALS

A. Product Data: For cleaning agents.

B. Contractor's List of Incomplete Items: Initial submittal at Substantial Completion.

C. Certified List of Incomplete Items: Final submittal at Final Completion.

1.3 CLOSEOUT SUBMITTALS

A. Certificates of Release: From authorities having jurisdiction.

B. Certificate of Insurance: For continuing coverage.

1.4 MAINTENANCE MATERIAL SUBMITTALS

A. Schedule of Maintenance Material Items: For maintenance material submittal items specified in other Sections.

1.5 SUBSTANTIAL COMPLETION PROCEDURES

A. Contractor's List of Incomplete Items: Prepare and submit a list of items to be completed and corrected (Contractor's punch list).

B. Submittals Prior to Substantial Completion: Complete the following a minimum of 7 days prior to requesting inspection for determining date of Substantial Completion. List items below that are incomplete at time of request.
   1. Certificates of Release: Obtain and submit releases from authorities having jurisdiction permitting Owner unrestricted use of the Work and access to services and utilities. Include occupancy permits, operating certificates, and similar releases.
   2. Submit closeout submittals specified in other Division 01 Sections, including project record documents, operation and maintenance manuals, final completion construction photographic documentation, damage or settlement surveys, property surveys, and similar final record information.
   3. Submit closeout submittals specified in individual Sections, including specific warranties, workmanship bonds, maintenance service agreements, final certifications, and similar documents.
   4. Submit maintenance material submittals specified in individual Sections, including tools, spare parts, extra materials, and similar items, and deliver to location designated by Architect. Label with manufacturer's name and model number where applicable.
      a. Schedule of Maintenance Material Items: Prepare and submit schedule of maintenance material submittal items, including name and quantity of each item and name and number of related Specification Section. Obtain Architect's signature for receipt of submittals.
   5. Submit test/adjust/balance records.
   6. Submit sustainable design submittals not previously submitted.
   7. Submit changeover information related to Owner's occupancy, use, operation, and maintenance.

C. Procedures Prior to Substantial Completion: Complete the following a minimum of 7 days prior to requesting inspection for determining date of Substantial Completion. List items below that are incomplete at time of request.
   1. Advise Owner of pending insurance changeover requirements.
   2. Make final changeover of permanent locks and deliver keys to Owner. Advise Owner's personnel of changeover in security provisions.
   3. Complete startup and testing of systems and equipment.
   4. Perform preventive maintenance on equipment used prior to Substantial Completion.
   5. Instruct Owner's personnel in operation, adjustment, and maintenance of products, equipment, and systems. Submit demonstration and training video recordings specified in Section 01 79 00 "Demonstration and Training."
   6. Advise Owner of changeover in heat and other utilities.
   7. Participate with Owner in conducting inspection and walkthrough with local emergency responders.
   8. Terminate and remove temporary facilities from Project site, along with mockups, construction tools, and similar elements.
   9. Complete final cleaning requirements, including touchup painting.
   10. Touch up and otherwise repair and restore marred exposed finishes to eliminate visual defects.

D. Inspection: Submit a written request for inspection to determine Substantial Completion a minimum of 7 days prior to date the work will be completed and ready for final inspection and tests. On receipt of request, Architect will either proceed with inspection

or notify Contractor of unfulfilled requirements. Architect will prepare the Certificate of Substantial Completion after inspection or will notify Contractor of items, either on Contractor's list or additional items identified by Architect, that must be completed or corrected before certificate will be issued.

1. Reinspection: Request reinspection when the Work identified in previous inspections as incomplete is completed or corrected.
2. Results of completed inspection will form the basis of requirements for final completion.

1.6 FINAL COMPLETION PROCEDURES

A. Preliminary Procedures: Before requesting final inspection for determining final completion, complete the following:
   1. Submit a final Application for Payment according to Section 01 29 00 "Payment Procedures."
   2. List of Incomplete Items: Submit copy of Architect's Substantial Completion inspection list of items to be completed or corrected (punch list), endorsed and dated by Architect. Copy of the list shall state that each item has been completed or otherwise resolved for acceptance.
   3. Certificate of Insurance: Submit evidence of final, continuing insurance coverage complying with insurance requirements.
   4. Instruct Owner's personnel in operation, adjustment, and maintenance of products, equipment, and systems.

B. Inspection: Submit a written request for final inspection to determine acceptance. On receipt of request, Architect will either proceed with inspection or notify Contractor of unfulfilled requirements. Architect will prepare a final Certificate for Payment after inspection or will notify Contractor of construction that must be completed or corrected before certificate will be issued.
   1. Reinspection: Request reinspection when the Work identified in previous inspections as incomplete is completed or corrected.

1.7 LIST OF INCOMPLETE ITEMS (PUNCH LIST)

A. Organization of List: Include name and identification of each space and area affected by construction operations for incomplete items and items needing correction including, if necessary, areas disturbed by Contractor that are outside the limits of construction.
   1. Organize list of spaces in sequential order.
   2. Organize items applying to each space by major element, including categories for ceiling, individual walls, floors, equipment, and building systems.
   3. Submit list of incomplete items in the following format:
      a. PDF electronic file. Architect will return annotated copy.

1.8 SUBMITTAL OF PROJECT WARRANTIES

A. Time of Submittal: Submit written warranties on request of Architect for designated portions of the Work where commencement of warranties other than date of Substantial Completion is indicated, or when delay in submittal of warranties might limit

Owner's rights under warranty.

B. Organize warranty documents into an orderly sequence based on the table of contents of the Project Manual.
   1. Bind warranties and bonds in heavy-duty, three-ring, vinyl-covered, loose-leaf binders, thickness as necessary to accommodate contents, and sized to receive 8-1/2-by-11-inch paper.
   2. Provide heavy paper dividers with plastic-covered tabs for each separate warranty. Mark tab to identify the product or installation. Provide a typed description of the product or installation, including the name of the product and the name, address, and telephone number of Installer.
   3. Identify each binder on the front and spine with the typed or printed title "WARRANTIES," Project name, and name of Contractor.
   4. Warranty Electronic File: Scan warranties and bonds and assemble complete warranty and bond submittal package into a single indexed electronic PDF file with links enabling navigation to each item. Provide bookmarked table of contents at beginning of document.

PART 2 - PRODUCTS

2.1 MATERIALS

A. Cleaning Agents: Use cleaning materials and agents recommended by manufacturer or fabricator of the surface to be cleaned. Do not use cleaning agents that are potentially hazardous to health or property or that might damage finished surfaces.

PART 3 - EXECUTION

3.1 FINAL CLEANING

A. General: Perform final cleaning. Conduct cleaning and waste-removal operations to comply with local laws and ordinances and Federal and local environmental and antipollution regulations.

B. Cleaning: Employ experienced workers or professional cleaners for final cleaning. Clean each surface or unit to condition expected in an average commercial building cleaning and maintenance program. Comply with manufacturer's written instructions.
   1. Complete the following cleaning operations before requesting inspection for certification of Substantial Completion for entire Project or for a designated portion of Project:
      a. Clean Project site, yard, and grounds, in areas disturbed by construction activities, including landscape development areas, of rubbish, waste material, litter, and other foreign substances.
      b. Sweep paved areas broom clean. Remove petrochemical spills, stains, and other foreign deposits.
      c. Rake grounds that are neither planted nor paved to a smooth, even-textured surface.

d. Remove tools, construction equipment, machinery, and surplus material from Project site.
e. Remove snow and ice to provide safe access to building.
f. Clean exposed exterior and interior hard-surfaced finishes to a dirt-free condition, free of stains, films, and similar foreign substances. Avoid disturbing natural weathering of exterior surfaces. Restore reflective surfaces to their original condition.
g. Remove debris and surface dust from limited access spaces, including roofs, plenums, shafts, trenches, equipment vaults, manholes, attics, and similar spaces.
h. Sweep concrete floors broom clean in unoccupied spaces.
i. Vacuum carpet and similar soft surfaces, removing debris and excess nap; clean according to manufacturer's recommendations if visible soil or stains remain.
j. Clean transparent materials, including mirrors and glass in doors and windows. Remove glazing compounds and other noticeable, vision-obscuring materials. Replace chipped or broken glass and other damaged transparent materials. Polish mirrors and glass, taking care not to scratch surfaces.
k. Remove labels that are not permanent.
l. Wipe surfaces of mechanical and electrical equipment, elevator equipment, and similar equipment. Remove excess lubrication, paint and mortar droppings, and other foreign substances.
m. Clean plumbing fixtures to a sanitary condition, free of stains, including stains resulting from water exposure.
n. Replace disposable air filters and clean permanent air filters. Clean exposed surfaces of diffusers, registers, and grills.
o. Clean light fixtures, lamps, globes, and reflectors to function with full efficiency.
p. Leave Project clean and ready for occupancy.

3.2 REPAIR OF THE WORK

A. Complete repair and restoration operations before requesting inspection for determination of Substantial Completion.

B. Repair or remove and replace defective construction. Repairing includes replacing defective parts, refinishing damaged surfaces, touching up with matching materials, and properly adjusting operating equipment. Where damaged or worn items cannot be repaired or restored, provide replacements. Remove and replace operating components that cannot be repaired. Restore damaged construction and permanent facilities used during construction to specified condition.
1. Remove and replace chipped, scratched, and broken glass, reflective surfaces, and other damaged transparent materials.
2. Touch up and otherwise repair and restore marred or exposed finishes and surfaces. Replace finishes and surfaces that that already show evidence of repair or restoration.
a. Do not paint over "UL" and other required labels and identification, including mechanical and electrical nameplates. Remove paint applied to required labels and identification.

3. Replace parts subject to operating conditions during construction that may impede operation or reduce longevity.
4. Replace burned-out bulbs, bulbs noticeably dimmed by hours of use, and defective and noisy starters in fluorescent and mercury vapor fixtures to comply with requirements for new fixtures.

END OF SECTION 01 77 00

SECTION 01 78 23 - OPERATION AND MAINTENANCE DATA

PART 1 - GENERAL

1.1 SUMMARY

A. Section includes administrative and procedural requirements for preparing operation and maintenance manuals, including the following:
   1. Operation and maintenance documentation directory.
   2. Emergency manuals.
   3. Operation manuals for systems, subsystems, and equipment.
   4. Product maintenance manuals.
   5. Systems and equipment maintenance manuals.

1.2 CLOSEOUT SUBMITTALS

A. Manual Content: Operations and maintenance manual content is specified in individual Specification Sections to be reviewed at the time of Section submittals. Submit reviewed manual content formatted and organized as required by this Section.
   1. Architect will comment on whether content of operations and maintenance submittals are acceptable.
   2. Where applicable, clarify and update reviewed manual content to correspond to revisions and field conditions.

B. Format: Submit operations and maintenance manuals in the following format:
   1. PDF electronic file. Assemble each manual into a composite electronically indexed file. Submit on digital media acceptable to Architect.
      a. Name each indexed document file in composite electronic index with applicable item name. Include a complete electronically linked operation and maintenance directory.
      b. Enable inserted reviewer comments on draft submittals.
   2. One paper copy. Include a complete operation and maintenance directory. Enclose title pages and directories in clear plastic sleeves.

C. Manual Submittal: Submit each manual in final form prior to requesting inspection for Substantial Completion and at least 15 days before commencing demonstration and training. Architect will return copy with comments.
   1. Correct or revise each manual to comply with Architect's comments. Submit copies of each corrected manual within 15 days of receipt of Architect's comments and prior to commencing demonstration and training.

PART 2 - PRODUCTS

2.1 REQUIREMENTS FOR OPERATION, AND MAINTENANCE MANUALS

A. Directory: Prepare a single, comprehensive directory of operation, and maintenance data and materials, listing items and their location to facilitate ready access to desired information.

B. Organization: Unless otherwise indicated, organize each manual into a separate section for each system and subsystem, and a separate section for each piece of equipment not part of a system. Each manual shall contain the following materials, in the order listed:
   1. Title page.
   2. Table of contents.
   3. Manual contents.

C. Title Page: Include the following information:
   1. Subject matter included in manual.
   2. Name and address of Project.
   3. Name and address of Owner.
   4. Date of submittal.
   5. Name and contact information for Contractor.
   6. Name and contact information for Construction Manager.
   7. Name and contact information for Architect.
   8. Name and contact information for Commissioning Authority.
   9. Names and contact information for major consultants to the Architect that designed the systems contained in the manuals.
   10. Cross-reference to related systems in other operation and maintenance manuals.

D. Table of Contents: List each product included in manual, identified by product name, indexed to the content of the volume, and cross-referenced to Specification Section number in Project Manual.

E. Manual Contents: Organize into sets of manageable size. Arrange contents alphabetically by system, subsystem, and equipment. If possible, assemble instructions for subsystems, equipment, and components of one system into a single binder.

F. Manuals, Electronic Files: Submit manuals in the form of a multiple file composite electronic PDF file for each manual type required.
   1. Electronic Files: Use electronic files prepared by manufacturer where available. Where scanning of paper documents is required, configure scanned file for minimum readable file size.
   2. File Names and Bookmarks: Enable bookmarking of individual documents based on file names. Name document files to correspond to system, subsystem, and equipment names used in manual directory and table of contents. Group documents for each system and subsystem into individual composite bookmarked files, then create composite manual, so that resulting bookmarks reflect the system, subsystem, and equipment names in a readily navigated file tree. Configure electronic manual to display bookmark panel on opening file.

G. Manuals, Paper Copy: Submit manuals in the form of hard copy, bound and labeled volumes.
   1. Binders: Heavy-duty, three-ring, vinyl-covered, loose-leaf binders, in thickness necessary to accommodate contents, sized to hold 8-1/2-by-11-inch paper; with clear plastic sleeve on spine to hold label describing contents and with pockets inside covers to hold folded oversize sheets.
      a. Identify each binder on front and spine, with printed title "OPERATION AND MAINTENANCE MANUAL," Project title or name, and subject matter of contents. Indicate volume number for multiple-volume sets.
   2. Dividers: Heavy-paper dividers with plastic-covered tabs for each section of the manual. Mark each tab to indicate contents. Include typed list of products and major components of equipment included in the section on each divider, cross-referenced to Specification Section number and title of Project Manual.
   3. Protective Plastic Sleeves: Transparent plastic sleeves designed to enclose diagnostic software storage media for computerized electronic equipment.
   4. Drawings: Attach reinforced, punched binder tabs on drawings and bind with text.
      a. If oversize drawings are necessary, fold drawings to same size as text pages and use as foldouts.
      b. If drawings are too large to be used as foldouts, fold and place drawings in labeled envelopes and bind envelopes in rear of manual. At appropriate locations in manual, insert typewritten pages indicating drawing titles, descriptions of contents, and drawing locations.

2.2 OPERATION MANUALS

A. Content: In addition to requirements in this Section, include operation data required in individual Specification Sections and the following information:
   1. System, subsystem, and equipment descriptions. Use designations for systems and equipment indicated on Contract Documents.
   2. Performance and design criteria if Contractor is delegated design responsibility.
   3. Operating standards.
   4. Operating procedures.
   5. Operating logs.
   6. Wiring diagrams.
   7. Control diagrams.
   8. Piped system diagrams.
   9. Precautions against improper use.
   10. License requirements including inspection and renewal dates.

B. Descriptions: Include the following:
   1. Product name and model number. Use designations for products indicated on Contract Documents.
   2. Manufacturer's name.
   3. Equipment identification with serial number of each component.
   4. Equipment function.
   5. Operating characteristics.
   6. Limiting conditions.
   7. Performance curves.
   8. Engineering data and tests.
   9. Complete nomenclature and number of replacement parts.

C. Operating Procedures: Include the following, as applicable:
   1. Startup procedures.
   2. Equipment or system break-in procedures.
   3. Routine and normal operating instructions.
   4. Regulation and control procedures.
   5. Instructions on stopping.
   6. Normal shutdown instructions.
   7. Seasonal and weekend operating instructions.
   8. Required sequences for electric or electronic systems.
   9. Special operating instructions and procedures.

D. Systems and Equipment Controls: Describe the sequence of operation, and diagram controls as installed.

E. Piped Systems: Diagram piping as installed, and identify color-coding where required for identification.

2.3 PRODUCT MAINTENANCE MANUALS

A. Content: Organize manual into a separate section for each product, material, and finish. Include source information, product information, maintenance procedures, repair materials and sources, and warranties and bonds, as described below.

B. Source Information: List each product included in manual, identified by product name and arranged to match manual's table of contents. For each product, list name, address, and telephone number of Installer or supplier and maintenance service agent, and cross-reference Specification Section number and title in Project Manual.

C. Product Information: Include the following, as applicable:
   1. Product name and model number.
   2. Manufacturer's name.
   3. Color, pattern, and texture.
   4. Material and chemical composition.
   5. Reordering information for specially manufactured products.

D. Maintenance Procedures: Include manufacturer's written recommendations and the following:
   1. Inspection procedures.
   2. Types of cleaning agents to be used and methods of cleaning.
   3. List of cleaning agents and methods of cleaning detrimental to product.
   4. Schedule for routine cleaning and maintenance.
   5. Repair instructions.

E. Repair Materials and Sources: Include lists of materials and local sources of materials and related services.

F. Warranties and Bonds: Include copies of warranties and bonds and lists of circumstances and conditions that would affect validity of warranties or bonds.

2.4 SYSTEMS AND EQUIPMENT MAINTENANCE MANUALS

A. Content: For each system, subsystem, and piece of equipment not part of a system, include source information, manufacturers' maintenance documentation, maintenance procedures, maintenance and service schedules, spare parts list and source information, maintenance service contracts, and warranty and bond information, as described below.

B. Source Information: List each system, subsystem, and piece of equipment included in manual, identified by product name and arranged to match manual's table of contents. For each product, list name, address, and telephone number of Installer or supplier and maintenance service agent, and cross-reference Specification Section number and title in Project Manual.

C. Manufacturers' Maintenance Documentation: Manufacturers' maintenance documentation including the following information for each component part or piece of equipment:
   1. Standard maintenance instructions and bulletins.
   2. Drawings, diagrams, and instructions required for maintenance, including disassembly and component removal, replacement, and assembly.
   3. Identification and nomenclature of parts and components.
   4. List of items recommended to be stocked as spare parts.

D. Maintenance Procedures: Include the following information and items that detail essential maintenance procedures:
   1. Test and inspection instructions.
   2. Troubleshooting guide.
   3. Precautions against improper maintenance.
   4. Disassembly; component removal, repair, and replacement; and reassembly instructions.
   5. Aligning, adjusting, and checking instructions.
   6. Demonstration and training video recording, if available.

E. Maintenance and Service Schedules: Include service and lubrication requirements, list of required lubricants for equipment, and separate schedules for preventive and routine maintenance and service with standard time allotment.

F. Spare Parts List and Source Information: Include lists of replacement and repair parts, with parts identified and cross-referenced to manufacturers' maintenance documentation and local sources of maintenance materials and related services.

G. Maintenance Service Contracts: Include copies of maintenance agreements with name and telephone number of service agent.

H. Warranties and Bonds: Include copies of warranties and bonds and lists of circumstances and conditions that would affect validity of warranties or bonds.

2.5 OPERATION AND AINTENANCE MANUALS AFFIXED TO BUILDING

A. Prepare Operation and Maintenance Manual in packets specific to each topic or piece

of equipment.

B. Enclose packets of information in Zip Seal self adhesive 9”x12” pouches. (Zip Seal pouches available at Grainger).

C. Distribute pouches through out building to suit requirements of ESDS 8.1b.

PART 3 - EXECUTION

3.1 MANUAL PREPARATION

A. Product Maintenance Manual: Assemble a complete set of maintenance data indicating care and maintenance of each product, material, and finish incorporated into the Work.

B. Operation and Maintenance Manuals: Assemble a complete set of operation and maintenance data indicating operation and maintenance of each system, subsystem, and piece of equipment not part of a system.

C. Manufacturers' Data: Where manuals contain manufacturers' standard printed data, include only sheets pertinent to product or component installed. Mark each sheet to identify each product or component incorporated into the Work. If data include more than one item in a tabular format, identify each item using appropriate references from the Contract Documents. Identify data applicable to the Work and delete references to information not applicable.

D. Drawings: Prepare drawings supplementing manufacturers' printed data to illustrate the relationship of component parts of equipment and systems and to illustrate control sequence and flow diagrams. Coordinate these drawings with information contained in record Drawings to ensure correct illustration of completed installation.
   1. Do not use original project record documents as part of operation and maintenance manuals.

E. Comply with Section 01 77 00 "Closeout Procedures" for schedule for submitting operation and maintenance documentation.

3.2 OPERATION AND MAINTENANCE MANUALS AFFIXED TO BUILDING

A. Affix operation and maintenance information to building or on equipment that is specific to that particular location or piece of equipment.

END OF SECTION 01 78 23

SECTION 01 78 39 - PROJECT RECORD DOCUMENTS

1.1 SUMMARY

A. Section includes administrative and procedural requirements for project record documents, including the following:
   1. Record Drawings.
   2. Record Specifications.

B. Related Requirements:
   1. Section 01 78 23 "Operation and Maintenance Data" for operation and maintenance manual requirements.

1.2 CLOSEOUT SUBMITTALS

A. Record Drawings: Comply with the following:
   1. Number of Copies: Submit one set of marked-up record prints.
   2. Number of Copies: Submit copies of record Drawings as follows:
      a. Initial Submittal:
         1) Submit PDF electronic files of scanned record prints.
         2) Architect will indicate whether general scope of changes, additional information recorded, and quality of drafting are acceptable.
      b. Final Submittal:
         1) Submit PDF electronic files of scanned record prints.

B. Record Specifications: Submit annotated PDF electronic files of Project's Specifications, including addenda and contract modifications.

PART 2 - PRODUCTS

2.1 RECORD DRAWINGS

A. Record Prints: Maintain one set of marked-up paper copies of the Contract Drawings and Shop Drawings, incorporating new and revised Drawings as modifications are issued.
   1. Preparation: Mark record prints to show the actual installation where installation varies from that shown originally. Require individual or entity who obtained record data, whether individual or entity is Installer, subcontractor, or similar entity, to provide information for preparation of corresponding marked-up record prints.
      a. Give particular attention to information on concealed elements that would be difficult to identify or measure and record later.
      b. Record data as soon as possible after obtaining it.
      c. Record and check the markup before enclosing concealed installations.
   2. Mark the Contract Drawings and Shop Drawings completely and accurately. Use personnel proficient at recording graphic information in production of marked-up record prints.

3. Mark record sets with erasable, red-colored pencil. Use other colors to distinguish between changes for different categories of the Work at same location.
4. Note Construction Change Directive numbers, alternate numbers, Change Order numbers, and similar identification, where applicable.

B. Record Digital Data Files: Immediately before inspection for Certificate of Substantial Completion, review marked-up record prints with Architect. When authorized, prepare a full set of corrected digital data files of the Contract Drawings, as follows:
1. Format: Annotated PDF electronic file with comment function enabled.
2. Incorporate changes and additional information previously marked on record prints. Delete, redraw, and add details and notations where applicable.
3. Refer instances of uncertainty to Architect through Construction Manager for resolution.
4. Architect will furnish Contractor one set of digital data files of the Contract Drawings for use in recording information.

C. Format: Identify and date each record Drawing; include the designation "PROJECT RECORD DRAWING" in a prominent location.
1. Record Prints: Organize record prints and newly prepared record Drawings into manageable sets. Bind each set with durable paper cover sheets. Include identification on cover sheets.
2. Format: Annotated PDF electronic file with comment function enabled.
3. Record Digital Data Files: Organize digital data information into separate electronic files that correspond to each sheet of the Contract Drawings. Name each file with the sheet identification. Include identification in each digital data file.
4. Identification: As follows:
   a. Project name.
   b. Date.
   c. Designation "PROJECT RECORD DRAWINGS."
   d. Name of Architect.
   e. Name of Contractor.

2.2 RECORD SPECIFICATIONS

A. Preparation: Mark Specifications to indicate the actual product installation where installation varies from that indicated in Specifications, addenda, and contract modifications.
1. Give particular attention to information on concealed products and installations that cannot be readily identified and recorded later.
2. Note related Change Orders, record Product Data, and record Drawings where applicable.

B. Format: Submit record Specifications as annotated PDF electronic file or scanned PDF electronic file(s) of marked-up paper copy of Specifications.

PART 3 - EXECUTION

3.1 RECORDING AND MAINTENANCE

A. Recording: Maintain one copy of each submittal during the construction period for project record document purposes. Post changes and revisions to project record documents as they occur; do not wait until end of Project.

B. Maintenance of Record Documents and Samples: Store record documents and Samples in the field office apart from the Contract Documents used for construction. Do not use project record documents for construction purposes. Maintain record documents in good order and in a clean, dry, legible condition, protected from deterioration and loss. Provide access to project record documents for Architect's and Construction Manager's reference during normal working hours.

END OF SECTION 01 78 39

SECTION 01 79 00 - DEMONSTRATION AND TRAINING

PART 1 - GENERAL

1.1 SUMMARY

A. Section includes administrative and procedural requirements for instructing Owner's personnel, including the following:
   1. Demonstration of operation of systems, subsystems, and equipment.
   2. Training in operation and maintenance of systems, subsystems, and equipment.
   3. Demonstration and training video recordings.

1.2 INFORMATIONAL SUBMITTALS

A. Instruction Program: Submit outline of instructional program for demonstration and training, including a list of training modules and a schedule of proposed dates, times, length of instruction time, and instructors' names for each training module. Include learning objective and outline for each training module.
   1. Indicate proposed training modules using manufacturer-produced demonstration and training video recordings for systems, equipment, and products in lieu of video recording of live instructional module.

1.3 CLOSEOUT SUBMITTALS

A. Demonstration and Training Video Recordings: Submit two copies within seven days of end of each training module.
   1. At completion of training, submit complete training manual(s) for Owner's use in PDF electronic file format on compact disc.

1.4 QUALITY ASSURANCE

A. Facilitator Qualifications: A firm or individual experienced in training or educating maintenance personnel in a training program similar in content and extent to that indicated for this Project, and whose work has resulted in training or education with a record of successful learning performance.

B. Instructor Qualifications: A factory-authorized service representative, complying with requirements in Section 01 40 00 "Quality Requirements," experienced in operation and maintenance procedures and training.

C. Preinstruction Conference: Conduct conference at Project site to comply with requirements in Section 01 31 00 "Project Management and Coordination." Review methods and procedures related to demonstration and training.

1.5 COORDINATION

A. Coordinate instruction schedule with Owner's operations. Adjust schedule as required to minimize disrupting Owner's operations and to ensure availability of Owner's personnel.

B. Coordinate content of training modules with content of approved emergency, operation, and maintenance manuals. Do not submit instruction program until operation and maintenance data has been reviewed and approved by Architect.

PART 2 - PRODUCTS

2.1 INSTRUCTION PROGRAM

A. Program Structure: Develop an instruction program that includes individual training modules for each system and for equipment not part of a system, as required by individual Specification Sections.

B. Training Modules: Develop a learning objective and teaching outline for each module. Include a description of specific skills and knowledge that participant is expected to master. For each module, include instruction for the following as applicable to the system, equipment, or component:
   1. Basis of System Design, Operational Requirements, and Criteria: Include the following:
      a. System, subsystem, and equipment descriptions.
      b. Performance and design criteria if Contractor is delegated design responsibility.
      c. Operating standards.
      d. Regulatory requirements.
      e. Equipment function.
      f. Operating characteristics.
      g. Limiting conditions.
      h. Performance curves.
   2. Documentation: Review the following items in detail:
      a. Emergency manuals.
      b. Operations manuals.
      c. Maintenance manuals.
      d. Project record documents.
      e. Identification systems.
      f. Warranties and bonds.
      g. Maintenance service agreements and similar continuing commitments.
   3. Emergencies: Include the following, as applicable:
      a. Instructions on meaning of warnings, trouble indications, and error messages.
      b. Instructions on stopping.
      c. Shutdown instructions for each type of emergency.
      d. Operating instructions for conditions outside of normal operating limits.
      e. Sequences for electric or electronic systems.
      f. Special operating instructions and procedures.

4. Operations: Include the following, as applicable:
   a. Startup procedures.
   b. Equipment or system break-in procedures.
   c. Routine and normal operating instructions.
   d. Regulation and control procedures.
   e. Control sequences.
   f. Safety procedures.
   g. Instructions on stopping.
   h. Normal shutdown instructions.
   i. Operating procedures for emergencies.
   j. Operating procedures for system, subsystem, or equipment failure.
   k. Seasonal and weekend operating instructions.
   l. Required sequences for electric or electronic systems.
   m. Special operating instructions and procedures.
5. Adjustments: Include the following:
   a. Alignments.
   b. Checking adjustments.
   c. Noise and vibration adjustments.
   d. Economy and efficiency adjustments.
6. Troubleshooting: Include the following:
   a. Diagnostic instructions.
   b. Test and inspection procedures.
7. Maintenance: Include the following:
   a. Inspection procedures.
   b. Types of cleaning agents to be used and methods of cleaning.
   c. List of cleaning agents and methods of cleaning detrimental to product.
   d. Procedures for routine cleaning
   e. Procedures for preventive maintenance.
   f. Procedures for routine maintenance.
   g. Instruction on use of special tools.
8. Repairs: Include the following:
   a. Diagnosis instructions.
   b. Repair instructions.
   c. Disassembly; component removal, repair, and replacement; and reassembly instructions.
   d. Instructions for identifying parts and components.
   e. Review of spare parts needed for operation and maintenance.

PART 3 - EXECUTION

3.1 PREPARATION

A. Assemble educational materials necessary for instruction, including documentation and training module. Assemble training modules into a training manual organized in coordination with requirements in Section 01 78 23 "Operation and Maintenance Data."

3.2 INSTRUCTION

A. Facilitator: Engage a qualified facilitator to prepare instruction program and training modules, to coordinate instructors, and to coordinate between Contractor and Owner for number of participants, instruction times, and location.

B. Scheduling: Provide instruction at mutually agreed on times. For equipment that requires seasonal operation, provide similar instruction at start of each season.
   1. Schedule training with Owner, through Architect, with at least seven days' advance notice.

C. Training Location and Reference Material: Conduct training on-site in the completed and fully operational facility using the actual equipment in-place. Conduct training using final operation and maintenance data submittals.

END OF SECTION 01 79 00

SECTION 01 81 13 – SUSTAINABILITY REQUIREMENTS

PART 1 - GENERAL

1.1 GENERAL REQUIREMENTS:

A. General: As specified in Section 00 72 00 – General Conditions.

1.2 SUMMARY

A. Section Includes: general requirements and procedures for compliance with Sustainability Criteria.

B. Related Sections

1. Division 1 through 33 – Sections for sustainability requirements specific to the Work of each of those Sections.
2. Section 01 33 00 – Submittal Procedures
3. Section 01 74 19 – Construction Waste Management
4. Section 01 81 19 – Indoor Air Quality Requirements

1.3 DEFINITIONS

A. Owner: For the purposes of this Section, “Owner” refers to the Archdiocese of Seattle.

B. Sustainable Building: Building materials and methods that promote environmental quality, economic vitality, and social benefit through sustainable construction of built environment. Sometimes called “green building” or “environmentally-friendly” construction.

C. Sustainability Administrator: Person(s) designated by the Owner to provide oversight of Sustainability-related work.

D. Post-Consumer Recycled Content: Percentage of waste material by weight available from consumer waste that has been used as a raw material (feedstock) in a building material.

E. Pre-Consumer Recycled Content: Percentage of waste material by weight available from industrial use incorporated into a building material.

1. Pre-consumer recyclable materials are different from industrial scrap, a by-product of industrial processes than can be easily reused as a feedstock.

F. Regionally Manufactured Materials: Materials that are manufactured within 500 miles of Project location. Manufacturing refers to final assembly of components into building product that is installed at Project site.

G. Regionally Extracted, Harvested, or Recovered Materials: Materials that are extracted, harvested, or recovered within 500 miles of Project site.

H. Solar Reflectance Index (SRI): A measure of constructed surface's ability to reflect solar heat, as shown by a small temperature rise.

1. Defined so that a standard black (reflectance 0.05, emittance 0.90) is 0 and a standard white (reflectance 0.80, emittance 0.90) is 100.
2. To calculate SRI for a given material, obtain reflectance value and emittance value for material.

a. SRI: Calculated according to ASTM E 1980.
b. Reflectance: Measured according to ASTM E 903, ASTM E 1918, or ASTM C 1549.
c. Emittance: Measured according to ASTM E 408 or ASTM C 1371.

I. CFC/HCFC: Chlorofluorocarbons/Hydrochlorofluorocarbons.

J. Emissivity: Thermal emittance factor specified by a manufacturer for a roofing product.

K. Energy Star Roofing Product: A product which provides solar reflectance levels required to meet U.S. EPA Energy Star Labeling requirements.

L. VOC: Volatile Organic Compounds.

1.4 SUBMITTAL PRE-REQUISITES

A. Conform to the following as required for Sustainability documentation by Contractor.

B. Submit Sustainability documentation as described in this and other sections of the Specifications.

C. All submittals shall conform to the performance criteria within this section. If NOT, identify with the product or material submittal. In the event of a discrepancy between Sustainability submittal requirements in this Section and submittal requirements in other Sections, this Section 01 81 13 shall take precedence.

1.5 SUBMITTALS

A. Submit in accordance with Section 01 33 00 – Submittal Procedures.

B. Sustainability Action Plans: Provide submittals within 30 days of date established for the Notice to Proceed indicating how the following requirements will be met.

1. Construction Activity Pollution Prevention - comply with the requirements of United States EPA Construction General Form to comply with Phase I and Phase II of the National Pollutant Discharge Elimination System (NPDES) or Local Standards and Codes, whichever is more stringent.

2. Construction Waste Management: Construction Waste Management plan complying with Section 01 74 19 – Construction Waste Management.
3. Recycled Materials: List of proposed materials with recycled content. Indicate post-consumer recycled content and post-industrial recycled content for each product having recycled content.
4. Recycled Materials: List of proposed regionally manufactured materials and regionally extracted, harvested, or recovered materials.

    a. Identify each regionally manufactured material and its source.
    b. Identify each regionally extracted, harvested or recovered material and its source.
    c. Comply with requirements and prepare narrative describing special circumstances regarding this project's approach to this criteria.

5. Construction Indoor Air Quality Management Plan - During Construction. Refer to Section 01 81 19 – Indoor Air Quality Requirements for additional detail.
6. Construction Indoor Air Quality Management Plan - Before Occupancy. Refer to section 01 81 19 Indoor Air Quality Management Requirements for additional detail.
7. Low Emitting Materials - comply with the requirements outlined in this and other sections of the specifications.

C. Sustainability Documentation Submittals:

1. Construction Activity, Pollution Prevention.

    a. Provide dated and time-stamped photos of in-place erosion and sediment control mechanisms used to limit site disturbance.

2. Water Efficient Plumbing Fixtures:

    a. Cut sheets for building flow and flush fixtures.
    b. Manufacturer name and model number.
    c. Rated flush rate in gallons per flush or flow rate in gallons per minute.

3. Cuts sheets for HVAC&R equipment, including equipment type, number, size (tons), refrigerant, and refrigerant charge. Verify that CFC refrigerants are not used.

4. Product Data for new HVAC equipment, actually installed, indicating absence of HCFC refrigerants, and for clean-agent fire-extinguishing systems indicating absence of HCFC and Halon.

5. Comply with Section 01 74 19 – Construction Waste Management. Submit:

    a. Completed Waste Reduction Work Plan indicating total waste material, quantities diverted, and means (how and where) by which diverted. Data can be based on weight (tons) or volume (cu. yds.), but must be consistent throughout. Support calculations as required through:

1) Documentation of recovery rate (if co-mingled).
2) Waste hauling certificates or receipts.
3) Brief narrative explaining how and to where each waste type is diverted.

6. Recycled Content:

a. List the recycled content products used.

1) The project seeks a project goal of incorporating a required percentage of 20% minimum recycled content materials and products.
2) Where there is no manufacturer's data for actual recycled content in products, assume a 25% post-consumer recycled content.

b. The project seeks a performance goal of a minimum of 20% of the materials in the project (by cost) to support recycled content claims.

7. Regional Materials: Project has a goal to demonstrate that project incorporates 10% regionally manufactured and regionally extracted materials/products.

8. Construction Indoor Air Quality During Construction:

a. Construction Indoor Air Quality management plan.
b. Product Data indicating MERV value for temporary filtration media used during construction.
c. Product Data indicating MERV value for filtration media installed right before occupancy.
d. List of filter media used during construction and confirmation that it was replaced before occupancy.
e. Confirm if permanently installed air handling equipment was used during construction.

9. Construction Indoor Air Quality – Pre-Occupancy:

a. Signed statement describing the building air flush-out and testing procedures including the dates when flush-out,(and testing if applicable) were begun and completed and statement that filtration media was replaced after flush-out and any testing.
b. Product Data for filtration media actually used during flush-out, and testing if applicable, and during occupancy.
c. If applicable, report from testing and inspecting agency indicating results of IAQ testing and documentation showing conformance with IAQ testing procedures and requirements, if applicable.

10. Low emitting materials – Adhesives and Sealants:

a. List of adhesives and sealants used within the building's weatherproofing system with product name, manufacturer, VOC content, and allowed VOC limit per requirements.

b. For each adhesive and sealant product used within the building's weatherproofing system, submit cut sheets, MSDS, or letters from product manufacturers clearly indicating VOC levels of products. Indicate VOC content in g/L calculated according to 40 CFR 59, Subpart D (EPA method 24).

11. Low Emitting Materials – Paints and Coatings:

    a. List of paints and coatings used within the building's weatherproofing system with product name, manufacturer, VOC content, and allowed VOC limit per requirements.
    b. For each paint product used within the building's weatherproofing system, submit product cut sheets, MSDS, signed attestations or other official literature from manufacturer as required to provide clear information regarding VOC content of paint product. (Final submittal only). Indicate VOC content in g/L calculated according to 40 CFR 59, Subpart D (EPA method 24).

12. Low Emitting Materials - Flooring:

    a. List carpet used in building with CRI Green Label Plus IAQ Test Program Certification Number listed.
    b. List carpet cushion used in building with CRI Green Label IAQ Test Program Certification Number listed.
    c. List of carpet adhesive used, including VOC content.
    d. List of all hard surface flooring used in the building with FloorScore confirmation per product. List of all floor finishes, adhesives, and grout including VOC content of each.
    e. Product Data and material safety data sheets (MSDSs) for carpet products indicating VOC content of each product used.
    f. For each flooring system used in interior of building (including walk-off mats), submit cut sheets or letters from product manufactures clearly indicating that each product meets its requisite standard.

13. Low Emitting Materials – Composite Wood and AgriFiber:

    a. List of all composite wood products used permanently in the building.
    b. For each composite wood / agrifiber product used in interior of building, submit cut sheets clearly indicating bonding agents for each composite wood and agrifiber product used in project and demonstrating that no added urea-formaldehyde resins are used in these products. Include statement indicating adhesives and binders used for each product.

1.6 CONTRACTOR REQUIREMENTS:

A. The Contractor shall:

1. Appoint in writing a Sustainability Contact for the project. The Contractor's Point of Contact will be directly responsible for ensuring the Contractor's compliance with Sustainability Requirements and goals of the project. This

person is also responsible for developing and maintaining all of the Contractor's submittal documentation and shall provide such information to the Architect/Owner in a timely manner as scheduled and upon request to facilitate compliance with the performance requirements.

PART 2 - PRODUCTS

2.1 REFRIGERANTS:

A. Do not use CFC-based refrigerants in HVAC and refrigeration equipment.

2.2 RECYCLED CONTENT OF MATERIALS GOAL:

A. Provide materials with recycled content, such that combined post-consumer and one-half post-industrial recycled content together, comprise at least 20% (by cost) of total value of material in Project as calculated using Sustainable Materials Submittal Form.
   1. Where a material is an assembly of multiple components, the recycled content value of a material assembly is determined by weight. The recycled fraction of the assembly is then multiplied by the cost of assembly to determine the recycled content value.
   2. Mechanical, electrical and plumbing components, furniture, and specialty items such as elevators do not need recycled content to be submitted. Include only materials permanently installed in the project.

2.3 REGIONAL MATERIALS GOAL:

A. Provide a minimum of 10% of building materials (by cost) that are regionally extracted, processed and manufactured within 500 miles of the Project Site.
   1. If only a fraction of a product or material is extracted, harvested, or recovered and manufactured locally, then only that percentage (by weight) must contribute to the regional value.
   2. Exclude Mechanical, electrical and plumbing components, furniture, and specialty items such as elevators and equipment. Include only materials permanently installed in the project.

2.4 LOW-EMITTING MATERIALS GOAL:

A. Adhesives and Sealants:

   1. Provide adhesives and sealants conforming to VOC content limits of South Coast Air Quality Management District (SCAQMD) Rule #1168. This applies to site-applied adhesives and sealants inside the building weatherproofing system.
   2. Provide sealants used as fillers that meet or exceed requirements of Bay Area Air Quality Management District Regulation 8, Rule 51.
   3. Provide products that meet the requirements of this credit for all products inside the building weatherproofing system that could emit contaminants into indoor

air. Materials that have potential to communicate their emissions to indoor air include:

a. Indoor surfaces in contact with indoor air including flooring.
b. Walls; ceilings; interior furnishings; suspended ceiling systems and materials above those suspended ceilings.
c. Ventilation system components in communication with ventilation supply or return air.
d. Materials inside of wall cavities, ceiling cavities, floor cavities, or horizontal or vertical chases.
e. Examples:

    1) Materials include caulking materials for windows, and insulation in ceilings or walls.
    2) Examples of materials that have little or no potential for communicating with indoor air include exterior siding, cladding, and roofing materials.

f. Refer to VOC limits in Tables 1 and 2 on the following page for low-emitting adhesives and sealants.

Table 1. Adhesives, Sealants and Sealant Primers: South Coast Air Quality Management District (SCAQMD) Rule #1168. VOC limits are listed in table below and correspond to an effective date of July 1, 2005 and rule amendment date of January 7, 2005.

Architectural Applications	VOC Limit (g/L less water)	Specialty Applications	VOC Limit (g/L less water)
Indoor carpet adhesives	50	PVC welding	510
Carpet pad adhesives	50	CPVC welding	490
Wood flooring adhesives	100	ABS welding	325
Rubber floor adhesives	60	Plastic cement welding	250
Subfloor adhesives	50	Adhesive primer for plastic	550
Ceramic tile adhesives	65	Contact adhesive	80
VCT and asphalt adhesives	50	Special purpose contact adhesive	250
Drywall and panel adhesives	50	Structural wood member adhesive	140
Cove base adhesives	50	Sheet applied rubber lining operations	850
Multipurpose construction adhesives	70	Top and trim adhesive	250
Structural glazing adhesives	100		
Substrate Specific Applications	**VOC Limit (g/L less water)**	**Sealants**	**VOC Limit (g/L less water)**
Metal to metal	30	Architectural	250
Plastic foams	50	Nonmembrane roof	300
Porous material (except wood)	50	Roadway	250
Wood	30	Single-ply roof membrane	450
Fiberglass	80	Other	420
Sealant Primers	**VOC Limit (g/L less water)**		
Architectural, nonporous	250		
Architectural, porous	775		
Other	750		

Table 2. Aerosol Adhesives: Green Seal Standard for Commercial Adhesives GS-36 requirements in effect on October 19, 2000.

Aerosol Adhesives	VOC Limits
General purpose mist spray	65% VOCs by weight
General purpose web spray	55% VOCs by weight
Special purpose aerosol adhesives (all types)	70% VOCs by weight

B. Paints and Coatings: For Paints and Coatings used on interior of building (Defined as Inside Weatherproofing and Applied On-Site) use low-emitting paints and coatings as identified in Section 09 90 00 – Paints and Coatings.

1. Architectural Paints, Coatings, and Primers Applied to Interior Walls and Ceilings: Do not exceed VOC content limits established in Green Seal Standard GS-11, Paints, First Edition, May 20, 1993.

   a. Flats: 50 g/L.
   b. Non-Flats: 150 g/L.

2. Anti-Corrosive and Anti-Rust Paints Applied to Interior Ferrous Metal Substrates: Do not exceed VOC content limit of 250 g/L established in Green Seal Standard GC-03, Anti-Corrosive Paints, Second Edition, January 7, 1997.
3. Clear Wood Finishes, Floor Coatings, Stains, and Shellacs Applied to Interior Elements: Do not exceed VOC content limits established in South Coast Air Quality Management District (SCAQMD) Rule 1113, Architectural Coatings, rules in effect on January 1, 2004.

   a. Clear wood finishes: varnish 350 g/L; lacquer 550 g/L.
   b. Floor coatings: 100 g/L.
   c. Sealers: waterproofing sealers 250 g/L; sanding sealers 275 g/L; other sealers 200 g/L.
   d. Shellacs: Clear 730 g/L; pigmented 550 g/L.
   e. Stains: 250 g/L.

4. Calculation of VOC excludes water and tinting color added at point of sale.
5. Because aerosol points are highly volatile and difficult to control, avoid use for large areas.
6. When used to touch up unanticipated damage that occurs during construction, conform to controls of Construction IAQ Management Plan per Section 01 81 19 – Indoor Air Quality Requirements.
7. Restricted Components: Paints and coatings shall not contain any of the following:
   a. Acrolein
   b. Acrylonitrile.
   c. Antimony.
   d. Benzene.
   e. Butyl benzyl phthalate.
   f. Cadmium.
   g. Di (2-ethylhexyl) phthalate.
   h. Di-n-butyl phthalate.
   i. Di-n-octyl phthalate.
   j. 1,2-dichlorobenzene.
   k. Diethyl phthalate.
   l. Dimethyl phthalate.
   m. Ethylbenzene.
   n. Formaldehyde.
   o. Hexavalent chromium.

p. Isophorone.
q. Lead.
r. Mercury.
s. Methyl ethyl ketone.
t. Methyl isobutyl ketone.
u. Methylene chloride.
v. Naphthalene.
w. Toluene (methylbenzene).
x. 1,1, 1-trichioroethane.
y. Vinyl chloride.

C. Flooring:
1. All carpet systems (carpet, cushion, and adhesive) installed must meet or exceed the testing and product requirements of the Carpet and Rug Institute's Green Label Indoor Air Quality Test Program.
2. All carpet adhesive must meet the requirements including a VOC limit of 50 g/L.
3. All hard surface flooring must be certified as compliant with the FloorScore standard (current as of the date of this rating system, or more stringent version) by an independent third-party. Flooring products covered by FloorScore include vinyl, linoleum, laminate flooring, wood flooring, ceramic flooring, rubber flooring, and wall base.
4. Concrete, wood, bamboo, and cork floor finishes such as sealer, stain and finish must meet the requirements of South Coast Air Quality Management District (SCAQMD) Rule 1113, Architectural Coatings, rules in effect on January 1, 2004.
5. Tile setting adhesives and grout must meet SCAQMD Rule 1168. VOC limits correspond to an effective date of July 1, 2005 and rule amendment date of January 7, 2005.

D. Composite Wood and Agrifiber:

1. Composite wood and agrifiber products used on interior of building (defined as inside of weatherproofing system) must contain no added urea-formaldehyde resins.
2. Laminating adhesives used to fabricate on-site and shop-applied composite wood and agrifiber assemblies: contain no added urea-formaldehyde resins.
3. Composite wood and agrifiber products are defined as: particleboard, medium density fiberboard (MDF), plywood, wheatboard, strawboard, panel substrates and door cores.
4. Materials considered fit-out, furniture, and equipment (FF&E) are not included.
5. Examine substrates for compliance with requirements for installation tolerances and other conditions affecting performance of the Work.
6. Proceed with installation only after unsatisfactory conditions have been corrected.

PART 3 - EXECUTION

3.1 SUSTAINABILITY COMPLIANCE - GENERAL:

A. Prior to beginning Work of this Contract, verify construction conditions as acceptable to achieve Sustainability Goals.

B. Do not proceed with Work until unsatisfactory conditions are corrected in a manner acceptable to Owner's Sustainability Administrator, and Owner.

C. Correct non-conforming work failing to meet Sustainability requirements at Contractor's expense.

D. Submit documentation as necessary to show conformance of corrected work.

3.2 CONSTRUCTION WASTE MANAGEMENT:

A. Comply with Section 01 74 19 – Construction Waste Management.

3.3 CONSTRUCTION INDOOR AIR QUALITY MANAGEMENT

A. During Construction: Comply with Section 01 81 19 – Indoor Air Quality Requirements

B. Pre-Occupancy: Comply with Section 01 81 19 – Indoor Air Quality Requirements

END OF SECTION

SECTION 01 81 19 – INDOOR AIR QUALITY REQUIREMENTS

PART 1 - GENERAL

1.1 SUMMARY:

A. This section describes the steps that the Contractor shall perform to maintain optimal air quality during and after construction. It provides a description of the Indoor Air Quality (IAQ) Management Plan Sustainability Requirements. The owner has set IAQ goals for job site operations on the project, within the limits of the construction schedule, contract sum, and available materials, equipment, products and services. These goals include:

1. Protect workers on the site from undue health risks during construction.
2. Install low-VOC materials as specified in Part 2 – Products throughout.
3. Prevent residual problems with indoor air quality in the completed building.

B. Drawings, the provisions of the Agreement, the General Conditions, and DIVISION 1 specification sections apply to Work of this Section.

C. Related Sections include the following:

1. Section 01 33 00 – Submittal Procedures
2. Division 23 – Heating, Ventilating & Air-Conditioning (HVAC)

1.2 REFERENCES:

A. Sheet Metal and Air Conditioning National Contractors Association (SMACNA) IAQ Guideline for Occupied Buildings Under Construction, 2nd Edition 2007, ANSI/SMACNA 008-2008 (Chapter 3).

B. American Society of Heating, Refrigeration, and Air Conditioning Engineers (ASHRAE) standards as follows: 62; 55; 52; and 1. Division 1 – Sections, general.

C. “Construction IAQ Management: Job-site Strategies for Ensuring a Healthy Building,” Environmental Building News, Vol. 11, No. 5, May 2002. Good discussion of strategies for controlling airborne pollutants and moisture during construction. Provides checklist based on SMACNA guideline referenced above.

D. “Indoor Air Quality in Public Buildings”, Volumes I and II, by Sheldon L, Handy RW, Hartwell TD, et al:, (Public Access Buildings Study).

E. National Particleboard Association (NPA) Standard for Formaldehyde Emission for Particleboard: NPA6.

1.3 DEFINITIONS:

A. “Owner” for the purposes of this Section, refers to the City of Bellingham

B. “A/C” (Air Cond.) means any or all of the equipment used to air condition a building or space.

C. “Air changes per hour” shall mean a number calculated by the maximum work area length in feet times the maximum work area width in feet times the maximum work area height in feet divided by 60 times the cubic feet per minute of air movement (L x W x H)/(60 x CFM).

D. “Odor” means something that can be detected by a person’s sense of smell whether objectionable or not to the person.

E. “Perceivable” means able to attain an awareness solely through the use of the human senses such as smell, sight, hearing, taste, and touch.

F. “VOC” means volatile organic compound, a compound containing a chemical constituent with a boiling point of less than 100 Deg C (volatile) and that contains carbon (organic).

G. “VOC emission rate” means the total amount of hydrocarbons emitted per area and unit of time as determined from the product and test method data supplied by the manufacturer or from data in the EPA Public Access Buildings Study.

1.4 SUBMITTALS:

A. Submit in accordance with Section 01 33 00 - Submittal Procedures.

B. Submit a certification, which may be a copy of the product label or Material Safety Data Sheets (MSDS), of the VOC emission rate for all VOC containing products. MSDS sheets and labels are acceptable only if the VOC data is available and highlighted. Maintain a copy of the VOC certifications and emission rates in a 3-ring binder at the job site.

C. SUSTAINABILITY SUBMITTALS:

1. Chapter 3: HVAC protection, source control, pathway interruption, housekeeping, and scheduling and shall include:

a. List of IAQ protective measures to be instituted on the site.
b. HVAC system component protection during construction.
c. Source control through installation of low-toxic or non-toxic materials.
d. Pathway interruption to isolate work areas where emitting materials are being installed.
e. Housekeeping to protect materials that are stored before installation and to avoid spreading contamination through the Project.
f. Sequencing installation of materials to avoid contaminating absorptive materials during construction.
g. Schedule for verification of IAQ measures.

PART 2 - PRODUCTS

2.1 MATERIALS:

A. Low-emitting products have been specified in appropriate sections.

PART 3 - EXECUTION

3.1 GENERAL REQUIREMENTS:

A. Use safety meetings, signage, and subcontractor agreements to communicate the goals of the construction indoor air quality management plan.

B. Conduct regular inspection and maintenance of indoor air quality measures including ventilation system protection, and ventilation rate.

C. Dehumidify, and ventilate building during course of Work. Maintain environmental conditions suitable for drying and curing materials and for prevention of conditions suitable for mold and mildew growth.

D. Ventilate building to remove moisture, dust, fumes, and odors.

E. Temper and dehumidify air to remove excess moisture.

F. Do not use moisture generating equipment indoors.

G. Require VOC-safe masks for interior and exterior workers installing VOC-emitting products (products that contain 150 g/L or more VOCs).

H. Use low-toxic cleaning supplies for surfaces, equipment, and worker's personal use, like soybean-based and citrus-based cleaners.

I. Smoking is prohibited inside the building once the building is closed in by any means or absorptive materials are located within the structure.

3.2 VENTILATION SYSTEM PROTECTION:

A. Do not run HVAC system during course of construction without prior written approval of Owner or as otherwise permitted by these specifications. Seal ductwork intake and exhaust vents to prevent contamination from dust, moisture, and chemical contamination.

B. Store HVAC equipment in a clean, dry location.

C. Seal all HVAC inlets and outlets.

D. Seal HVAC components during installation.

E. Use a temporary ventilation system during construction.

F. Use temporary filtration media.

G. Temporary filtration media shall have a Minimum Efficiency Reporting Value (MERV) of 8 as determined by ASHRAE 52.2-1999) on any return air systems operational during construction. For air intakes into rooms that are very sensitive to dust contamination, such as computer rooms, filtration media should be the best that the HVAC systems fans can handle, up to an MERV rating of 12.

H. Replace all filtration media immediately prior to occupancy per DIVISION 23 – Heating Ventilation & Air-Conditioning (HVAC).

I. Clean air plenums before closing them in.

J. Inspect filters regularly.

3.3 MICROBIAL AND FUNGAL CONTAMINATION PREVENTION:

A. Perform, schedule, and sequence Work as required to limit conditions supporting formations of microbes, molds, and fungi.

B. Ensure that construction methods will not result in moisture intrusion.

C. Protect on-site stored and installed absorptive materials (such as insulation, drywall, and wood) from moisture damage and from contamination by construction dust, debris, and fumes during all phases of construction, both before and after installation.

D. Control water penetration, dampness, and humidity to protect products not treated for exterior use.

E. Do not install moisture-damaged materials.

F. When visible microbial, mold and fungal formations are observed, promptly contact owner for determination by industrial hygienist employed by Owner.

G. Clean non-absorbent materials using low hazard cleaners accepted by owner.

H. Remove and replace affected materials that cannot be completely cleaned by non-abrasive surface treatments.

I. Remove and replace affected materials identified as being food sources for microbes, molds, and fungi.

J. Remove interior products and finishes, identified as food sources, that have absorbed sufficient moisture to become damp, and are not immediately made dry, whether or not microbial, mold, or fungal growth is observed. Include:

1. Gypsum board.
2. Organic materials composed of cellulose fiber or paper.

3. Materials containing sucrose or other binders and glues identified as supporting microbial growth.
4. Fibrous insulation materials including duct liner, fiberglass insulation, and mineral fiber.
5. Mechanical ductwork.

K. Wood Lumber and Engineered Products:

1. Take remedial action to reduce moisture content of wood products measured by a moisture meter as exceeding 15 percent moisture content.
2. Remove wood and cellulose based products showing signs of mildew from construction site, including in-place construction not accepted by Owner's industrial hygienist.

L. Promptly correct conditions supporting or subject to becoming an environment for microbial, mold, and fungal growth.

M. Repair conditions leading to moisture condensation and water penetration.

N. Do not permit conditions leading to standing water.

3.4 POLLUTION SOURCE CONTROL:

A. Use only low-emitting products as specified in appropriate sections.

B. Provide methods to avoid tracking pollutants into the work areas.

C. Allow high-VOC materials to off-gas prior to installation. For example, all dry finishes and materials (such as carpet, floor tile, acoustical tile, textiles, office furniture, wood shelving, etc.) shall be allowed to "air-out" in clean environments prior to installation in a building.

D. Use the least amount of "wet" materials (such as adhesives, sealants, glazes, caulks, paints, etc.) during construction and product applications while still maintaining installation protocol required to meeting for manufacturer's warranty requirements.

3.5 POLLUTION PATHWAY INTERRUPTION:

A. Use an air barrier or pressure differential to isolate areas at different stages of completion.

B. Housekeeping:

1. Confine dust-generating activities and promptly clean up dust and other potential airborne contaminants as they are generated.
2. Use wet sanding for gypsum board assemblies. Exception: Dry sanding allowed if the following measures are in place:
   a. Provide full isolation of space under finishing.

b. Install plastic protection sheeting to provide air sealing during sanding operations.
c. Close/seal all air system devices and ductwork.
d. Sequence construction work to prevent contamination of other spaces with gypsum dust.
e. Provide worker protection.
f. Keep work area dry and promptly clean up all spills.
g. Keep containers of volatile liquids covered when not in use.
h. Do not allow accumulations of sawdust, dust, rags, debris, and carbon-based materials and materials emitting fumes and odors to accumulate within concealed construction, including within stud spaces and wall cavities. Remove and clean prior to enclosing behind permanent construction.
i. Vacuum carpet, upholstery, and other porous materials throughout building using a high-efficiency particulate arrestor HEPA filter vacuum cleaner just prior to Substantial Completion. Replace and dispose of vacuum bags when bag is half full.

3.6 SCHEDULING:

A. Account for curing time and off-gassing when scheduling construction activities.

B. Enclose building, control humidity, ventilate, and make watertight prior to installing interior materials and finishes.

C. Allow wet-spray cellulose to dry before covering.

D. Allow furnishings and materials such as carpet, floor tile, acoustical tile, textiles, office furniture, and casework, to air out in clean environment prior to installation.

E. Install porous materials only after closing in the building.

F. Allow sufficient time for work generating significant moisture to dry and cure before installing absorbent materials such as carpet, acoustical material, textiles, and other material of type that may attract and retain moisture.

G. Provide adequate ventilation during curing period.

H. Provide supplemental (spot) ventilation for at least 72 hours after work is completed. Preferred HVAC system operation uses supply air fans and ducts only; exhaust provided through windows. Use exhaust fans to pull exhaust air from deep interior locations. Stair towers and other paths to exterior can be useful during this process.

3.7 REMEDIAL ACTION:

A. Promptly take action as necessary to identify and remediate conditions suspected of supporting biological, particulate, and chemical indoor air pollution. Identify, stop, and repair causes of uncontrolled water penetration into building.

B. Promptly notify and consult with owner, prior to beginning removal of material, where contamination by hazardous chemicals, microbes, and fungi is suspected.

3.8 COMMISSIONING:

A. Inspect ductwork for refuse, contaminants, moisture, and other foreign contamination prior to Commissioning. Notify Commissioning Agent of satisfactory inspection prior to beginning of Commissioning.

3.9 PRE-OCCUPANCY FLUSH: (if desired by the Parish)

A. Contractor to choose one of the two options described below:

1. Option 1: After construction ends, prior to occupancy and with all interior finishes installed, perform a building flush-out by supplying a total air volume of 14,000 cu.ft. of outdoor air per sq.ft. of floor area while maintaining an internal temperature of at least 60 degrees F and relative humidity no higher than 60%.
2. Option 2: If occupancy is desired prior to completion of the flush-out, the space may be occupied following delivery of a minimum of 3,500 cu.ft. of outdoor air per sq.ft. of floor area to the space. Once a space is occupied, it shall be ventilated at a minimum rate of 0.30 cfm/sq.ft. of outside air or the design minimum outside air rate whichever is greater. During each day of the flush-out period, ventilation shall begin a minimum of three hours prior to occupancy and continue during occupancy. These conditions shall be maintained until a total of 14,000 cu.ft./sq.ft. of outside air has been delivered to the space.

END OF SECTION

SECTION 02 31 32 – GEOTECHNICAL REPORT

PART 1 - GENERAL

1.1 SUMMARY

A. Section includes the Geotechnical Reports, memos and evaluations prepared for the existing site conditions at 1404 Valley Avenue East, Sumner, WA, by GeoEngineers; Tacoma Office, (253) 383-4940.

1.2 RECOMMENDATIONS AND ANALYSIS

A. Geotechnical Site Investigation Report, dated June 25, 2019, by GeoEngineers.

PART 2 - PRODUCTS – NOT USED

PART 3 - EXECUTION – NOT USED

END OF SECTION

Geotechnical Engineering Services Report

St Andrew Catholic Church - Parish Hall
Sumner, Washington

for
St Andrew Catholic Church

June 25, 2019

GeoEngineers
Earth Science + Technology

Geotechnical Engineering Services Report

St Andrew Catholic Church - Parish Hall
Sumner, Washington

for
St Andrew Catholic Church

June 25, 2019

GeoEngineers

1101 South Fawcett Avenue, Suite 200
Tacoma, Washington 98402
253.383.4940

Geotechnical Engineering Services Report

St Andrew Catholic Church – Parish Hall
Sumner, Washington

File No. 21792-001-00

June 25, 2019

Prepared for:

St Andrew Catholic Church
co/ RCM Architects
1223 Railroad Avenue
Bellingham, Washington 98225

Attention: Brad Cornwell, AIA, LEED AP

Prepared by:

GeoEngineers, Inc.
1101 South Fawcett Avenue, Suite 200
Tacoma, Washington 98402
253.383.4940

Brett E. Larabee, PE
Geotechnical Engineer

Dennis (DJ) Thompson, PE
Associate

DENNIS JOHN THOMPSON
STATE OF WASHINGTON
38397
REGISTERED
PROFESSIONAL ENGINEER

June 25, 2019

BEL:DJT:tt

Table of Contents

LIST OF FIGURES

APPENDICES

INTRODUCTION AND PROJECT UNDERSTANDING

GeoEngineers is pleased to present this geotechnical engineering report in support of design and construction of the Parish Hall near the existing St Andrew Catholic Church (St. Andrews) in Sumner, Washington. The project site is located to the northeast of Valley Avenue and Washington Street intersection as shown on Figure 1. This report reflects our understanding of proposed improvements as outlined in preliminary schematic design documents dated January 27, 2019 and April 4, 2019 as well as our discussions during final project planning. Our discussions include communications with RMC Architects (RMC), PCS Structural Solutions (PCS, project structural engineer) and Freeland and Associates, Inc. (project civil engineer).

Our services have been provided in general accordance with our agreement dated February 13, 2015, which was signed on March 4, 2015. We prepared a draft report dated May 14, 2015 for this project. Since then, our services on this project were put on hold. Our services were verbally re-authorized by RMC as presented in a memo dated April 3, 2019 from RMC Architects to St Andrews. Details regarding our scope of services can be reviewed in our February 13, 2015 agreement. Our agreement included two tasks. Task 100 included subsurface explorations, design and preparation of this geotechnical report. Task 200 included consultation services during construction. We have replaced our Task 200 services since re-engaging with the project and instead have provided additional consultation and design addressing ground improvements, settlement analysis and infiltration. The results of these consultations and designs are presented in this final report.

Planned improvements at the project site include constructing the new Parish Hall building, adjusting existing site grade, installing pavements for parking areas and access roads, and constructing stormwater facilities. The proposed Parish Hall will be located northwest of the existing church as shown on the Site Plan, Figure 2. The Parish Hall will be a single-story structure with a room containing a large vaulted ceiling and to more conventional single-story rooms comprised of bathrooms, kitchens, and other facilities located east and west of the hall. A reinforced mat slab construction with spread foundations has been chosen for foundation types. Typical building slab loads will be around 600 to 700 pounds per square foot (psf) under bearing walls; continuous footing loads will be a maximum of 2 kips per linear foot (klf); typical column loads will be on the order of 40 kips or less.

The proposed new parking and roadway areas will be located to the north and west of the proposed Parish Hall. We understand that vehicles will access the parking area from a new site entrance located along Valley Avenue. Parking and roadway areas will likely be paved with asphalt concrete; some areas may consider pervious asphalt concrete sections.

Based on our review of existing topography, the current site grade west of the Parish Hall is about 3 to 5 feet lower than the site grade at the east of the Parish Hall. Adjustments to site grade will be made for final development and will include raising grade west and north of the Parish Hall to match final grade. Stormwater detention facilities are also being considered north of the Parish Hall and permeable pavements may also be constructed north of the Parish Hall area.

SITE CONDITIONS

Literature Review

We reviewed relevant in-house files, the "Limited Geotechnical Engineering Investigation, Proposed Rotary Project, 1401 Valley Avenue, Sumner Washington" report prepared by Krazan & Associates (dated July 23, 2012), the St Andrew Parish Church Building Plans developed by Merritt & Pardini (dated August 14, 1998), the *Surficial Geology and Geomorphology of the Lake Tapps Quadrangle* (Crandell, 1963) geologic map, and the *Washington Department of Natural Resources Liquefaction Susceptibility Map for the Sumner Quadrangle* (Dragovich, 1995).

Based on our review of the Krazan & Associates Geotechnical Report and the St Andrews Parish Church Building Plans we understand that the existing structures at the project site are supported on shallow foundations.

The geologic map of the project area indicates soils underlying the project area are Alluvium (Qa). Alluvium typically consists of interbedded layers of silt, sand and gravel deposited by lowland streams and rivers, in this case, the Puyallup River. Our experience with alluvium in this area indicates that organic deposits such as peat or organic silt could be present. Peat is comprised predominantly of organic matter commonly interbedded with silt and clay. Peat is generally very soft to soft and is highly compressible.

The liquefaction susceptibility map indicates the soils in the project vicinity have a "high" liquefaction susceptibility.

Site Conditions

The church property is located in Sumner, Washington. Properties surrounding the project site are currently occupied by low-rise structures including single family homes, churches, schools and commercial businesses. The building site of the proposed Parish Hall is located in the northwest corner of the church property.

The project boundaries are generally defined by Valley Avenue to the west, Daffodil Valley Elementary School to the north, an existing path and concrete grotto structure to the east and the existing church building to the south. Existing improvements within the project site include a gravel-surfaced access roadway and parking area near the south edge of the project site.

We understand that the existing church was constructed on top of a fill pad. The fill pad appears to extend beyond the church footprint to the north, northwest, and east and includes the area of the proposed Parish Hall and portions of the parking area. The ground surface elevations of the fill pad, existing church, and the areas to the east of the proposed building location are between 65 to 66 feet (NGVD 29). Ground surface elevations of the undeveloped areas adjacent to the fill pad (north and west of the Parish Hall building location) and the southern boundary of the church property are between 60 and 63 feet. The approximate north and western edges of the fill pad are shown on the Site Plan. The transition between the edge of the fill pad and the lower elevation areas surrounding the fill pad varies in steepness. There is an abrupt transition (1 Vertical:1 Horizontal [1V:1H] slope) between the fill pad edge and the surrounding areas along portions of the north and west fill pad edges. In areas to the south and southwest of the proposed Parish Hall, the transition is less abrupt. The slope along the north edge of the fill pad grades down towards an

existing drainage swale located on the elementary school property. We observed standing water in the drainage swale during our drilling activities.

Vegetation within the project site consists primarily of grass lawn. A few deciduous trees are located in the central and western portion of the project site.

Subsurface Explorations and Laboratory Testing

Subsurface conditions at the project site were explored by advancing three borings, B-1 through B-3, at the approximate locations shown on the Site Plan. B-1 and B-2 were located within in the footprint of the Parish Hall and parking area. B-3 was advanced to the southwest of the proposed building location where possible stormwater systems may be constructed. Soil samples were collected during drilling and selected samples were tested in our laboratory to confirm field soil classifications and evaluate pertinent engineering properties. Detailed summaries of our subsurface exploration and laboratory testing programs are included in Appendices A and B, respectively.

Subsurface Conditions

Soil Conditions

In general, we observed between about 2.5 and 8.5 feet of fill material underlain by native soils at the locations explored. B-1 and B-2 were advanced from on top of the existing fill pad. In these borings we observed about 4 inches of sod and topsoil underlain by fill, which extends to depths of about 7.5 and 8.5 feet below the ground surface (bgs). Fill material in B-1 and B-2 generally consisted of medium dense silty gravel overlying silty sand. We observed fill material to a depth of about 2.5 feet bgs in B-3. Fill encountered in B-3 generally consisted of medium dense gravel with silt and sand.

Native soils below the fill generally consisted of very loose to medium dense silty sand and very soft to medium stiff clay, silt, and sandy silt. Organic silt and peat were observed in borings B-1 and B-2 at depths between about 13 and 14 feet bgs, and between about 31 and 34 feet bgs. Organic silt was also observed in B-3 between about 9 and 14 feet bgs.

Peat material was observed to be amorphous with natural moisture contents between about 200 and 300 percent. We observed a thin lens of clay within the peat in boring B-1. Occasional pieces of wood and other partially decomposed organic material were observed within the peat deposits.

Groundwater Conditions

We observed groundwater during drilling between about Elevation 58 and 56 feet (NGVD 29). We expect these elevations to be near the static groundwater elevation for the area. We anticipate that groundwater levels at the project site will fluctuate with season and precipitation, typically being highest near the end of the wet season. The wet weather season in western Washington generally begins in October and continues through May.

CONCLUSIONS AND RECOMMENDATIONS

General

Based on our understanding of the proposed project, the explorations performed for this study and our experience, it is our opinion that the project site is generally suitable for the proposed developments with respect to geotechnical considerations. Special design and/or construction considerations may be required to reduce the potential for significant settlements in the building and parking areas. A summary of the primary geotechnical considerations for the proposed developments at the site is provided below and is followed by our detailed recommendations:

- Highly compressible peat was observed in the soil profile below the location of the new building. Total static settlement of the peat due to the anticipated building loads is estimated to be on the order of 2 to 5 inches. Preloading of the building area, or removal of the existing fill material is an option to mitigate static settlements.
- Permanent area fills placed to raise existing site grade will likely cause consolidation settlement in the peat and silt material. Settlement magnitudes will depend on the thickness of the area fill.
- The Parish Hall building can be satisfactorily supported on shallow foundations with regard to bearing capacity; we provide settlement estimates with specific bearing capacity for use in design, which include consideration for preloading or removal of existing fill.
- Based on our observations and analyses, portions of the site soils are susceptible to liquefaction and liquefaction-induced ground settlement could occur during a seismic event. We discuss options for mitigation of liquefaction-induced settlements, including reinforced mat slab foundations.
- We observed groundwater within 5 feet of the ground surface in the proposed infiltration areas. Shallow groundwater depths and soils with limited infiltration capacities may influence the feasibility and design of stormwater infiltration facilities. Some of the fill area where the Parish Hall will be located has some potential for infiltration.
- Shallow excavations extending to depths of 5 or more feet below existing grades could encounter groundwater. Dewatering may be required if groundwater is encountered in excavations.

Seismic Design Considerations

International Building Code Parameters

We evaluated seismic site response using map-based methods described in the 2012 and the 2015 IBC. Seismic site response for each edition is the same. The parameters provided below were provided in our draft report.

TABLE 1. SEISMIC DESIGN CRITERIA

2012 and 2015 IBC Seismic Design Parameters	
Spectral Response Acceleration at Short Periods (S_S)	1.240g
Spectral Response Acceleration at 1-Second Periods (S_1)	0.474g
Site Class	E
Design Factored Peak Ground Acceleration (PGA_M)	0.45g
Design Spectral Response Acceleration at Short Periods (S_{DS})	0.744g
Design Spectral Response Acceleration at 1-Second Periods (S_{D1})	0.758g

Liquefaction Potential, Seismic Slope Stability, and Surface Rupture

Liquefaction Potential

Liquefaction refers to a condition where vibration or shaking of the ground, usually from earthquake forces, results in development of excess pore pressures in loose, saturated soils and subsequent loss of strength in the deposit of soil so affected. In general, soils that are susceptible to liquefaction include loose to medium dense "clean" to silty sands that are below the water table. Based on the soil conditions observed in our explorations, the shallow groundwater depth, and our review of the published liquefaction susceptibility maps for the project site it is our opinion that the potential for liquefaction at this site is high.

Based on the conditions observed in borings B-1 through B-3, it is our opinion that significant portions of the soils between about Elevation 58 and 15 feet (about 8 to 50 feet below existing ground surface) are susceptible to liquefaction due to a design earthquake event. Based on our analysis, we estimate liquefaction-induced settlement could occur and result in ground surface settlement on the order of 12 to 24 inches with differential settlement on the order of 6 to 12 inches. Liquefaction of loose layers, if present below a depth of 50 feet could cause additional area settlement during large earthquakes. A discussion of possible liquefaction-induced settlement mitigation techniques is provided in the "Shallow Foundation Settlement Mitigation Options" section of this report. Without ground improvements or deep pile foundations, we recommend the structure be designed to handle this differential settlement for life safety and collapse requirements per IBC.

Lateral Spreading Potential

Lateral spreading related to seismic activity typically involves lateral displacement of large, surficial blocks of non-liquefied soil when a layer of underlying soil loses strength during seismic shaking. Lateral spreading usually develops in areas where sloping ground or large grade changes (including retaining walls) are present. Based on our understanding of the subsurface conditions and current site topography, it is our opinion that the risk of lateral spreading is low.

Surface Rupture Potential

According to the Washington State Department of Natural Resources Interactive Natural Hazards Map (accessed April 16, 2015), no surface faults are mapped near the project site. Based on this, it is our opinion that the risk for seismic surface rupture at the site is low.

Shallow Foundations

General

It is our opinion that the proposed Parish Hall can be satisfactorily founded on continuous or isolated column footings provided the potential consolidation and liquefaction-induced settlements are addressed. Below we provide recommendations for design and construction of shallow footings, settlement estimates, and some potential settlement mitigation options.

The proposed building floor plan shows that the Parish Hall foundations will be constructed on top of the existing fill pad located in the north portion of the site. Construction of the Parish Hall on top of the existing fill pad will be necessary to mitigate and reduce consolidation settlements. We recommend that the footings bear on proof-compacted existing fill soil or on compacted structural fill placed over suitable existing fill.

The exterior footings should be established at least 18 inches below the lowest adjacent grade. The recommended minimum footing depth is greater than the anticipated frost depth. Interior footings can be founded a minimum of 12 inches below the top of the floor slab. Isolated column and continuous wall footings should have minimum widths of 24 and 18 inches, respectively.

During our design studies, we had also considered pile foundations. While pile foundations mitigate typical consolidation settlement from the building loads, it is our opinion that pile foundations will not be economical for reduction of settlement due to liquefaction. In general, additional length of pile is required to mitigate liquefaction-induced settlements due to loss of strength of surrounding soil during the design earthquake and associated down-drag loads from the resulting settlement.

Footing Bearing Surface Preparation

Bearing surfaces beneath footings should be thoroughly compacted to a uniformly firm and unyielding condition on completion of excavation and before placing structural fill or foundation elements. The exposed soil should be observed and probed by a qualified geotechnical engineer. If soft or otherwise unsuitable areas are revealed during observation and probing that cannot be compacted to a stable and uniformly firm condition, we recommend that: (1) the exposed soils be scarified (e.g., with a ripper or farmer's disc), aerated and recompacted, if practical; or (2) the unsuitable soils be overexcavated and replaced with compacted structural fill, as needed. If necessary, overexcavations should extend laterally beyond the foundation perimeter a distance equal to the depth of overexcavation, or 2 feet, whichever is less. Foundation bearing surfaces should not be exposed to standing water. If water pools in the excavation, it must be removed before placing structural fill, reinforcing steel or concrete.

Allowable Bearing Pressure

We recommend that footings and mat foundations founded as recommended be proportioned using an allowable soil bearing pressure of 1,500 psf. This bearing pressure applies to the total of dead and long-term live loads and may be increased by one-third when considering total loads, including earthquake or wind loads. These are net bearing pressures. The weight of the footing and overlying backfill can be ignored in calculating footing sizes.

Foundation Settlement

General

Highly compressible material was observed below the fill in our borings completed in the area of the Parish Hall footprint. Foundation loads from the new structure are expected to cause consolidation settlement to occur in the compressible soils. Additionally, continual long-term creep settlement of the peat soils will likely occur over the design life of the building. Further discussion is presented below.

For isolated column loads of up to 40 kips established at or near easting site grade, we estimate that total settlement (consolidation and long-term creep) of proportioned isolated spread footing constructed near proposed grades could be on the order of 2 inches. Differential settlement between comparably loaded isolated footings could be on the order of 1 inch.

For continuous wall footing loads between about 2 to 3.75 klf foot constructed at or near existing site grades we estimate that total settlement below 18-inch wide continuous wall footings could be on the order of 2 to 5 inches. Differential settlement along about 50 feet of wall is estimated to be on the order of 1 to 2½ inches.

The settlement values presented above reflect our estimate of both consolidation settlement and long-term creep-based settlement. We estimate most of the total settlement will occur as consolidation-based settlement. We anticipate that most of the consolidation settlement will take place typically within the first 2 to 4 months after construction is completed. The remaining long-term creep settlement will continue to occur over a period of about 10 to 20 years.

There are several mitigation options that could be considered to reduce consolidation settlement magnitudes. During the course of our recent study and consultation (2019), we discussed two primary options. These options are presented below. It should be noted that the recommendations presented below will not mitigate liquefaction-induced settlement. However, it is possible to reduce consolidation settlements with some liquefaction mitigation techniques.

We discuss mitigation of static settlement and liquefaction-induced settlement further.

Consolidation Settlement Reduction and Resulting Static Settlement Estimates

Typically, conventional construction and design of buildings similar to that proposed can tolerate total settlements on the order of 1 inch with differential settlements of about half this amount (tolerable settlement limits). To attain this settlement limit, we recommend one of the following conditions for design of the building pad:

- The building pad could be preloaded to simulate the new structure loads. For the proposed building loads, we recommend a minimum of 2 feet of preload material placed above existing grade and proposed slab elevation. The preload material should be granular in nature and achieve an in-place density of at least 120 pounds per cubic foot (pcf).
- The building site grade could be reduced. Final slab finished floor elevation should be designed at Elevation 64 feet. Slightly lower elevations can also be incorporated; however, we should review final design grades and comment appropriately if finished floor will be lower than Elevation 63 feet.

Preload and Surcharge Fill Explanation

For this report we define preload as fill that is placed to establish site grade and cause consolidation settlement before continuing to the next phase of construction. We define a surcharge fill as temporary fill placed above planned final grades to cause additional and more rapid consolidation settlement. The surcharge fill is subsequently removed before continuing with the next phase of construction; typically building construction.

The existing fill pad covers nearly the entire area of the proposed building area and can be considered a preload fill. Our settlement estimates presented above account for the existing preload. An additional preload or surcharge could be used to help reduce settlement due to foundation loads. We understand that the Parish Hall building will likely be constructed at or near the current site grade, so a surcharge program would be the appropriate course of action for this site. In general, the preload fill should extend at least 5 feet beyond the building footprint, followed by placement of the temporary surcharge fill. The building plans currently show the building situated upon the preload material; if the building footprint is changed and it extends beyond the preload, it may be necessary to install additional preload and surcharge and allow it to settle prior to building construction.

Settlement of the surcharge fill should be monitored at several locations. This can be accomplished by setting settlement plates in the fill and taking survey elevation readings referenced to a benchmark well away from the surcharge fill. We recommend that the surcharge fill be left in place until most of the settlement has occurred. Based on our experience, we estimate this could take approximately 6 to 8 weeks. If a surcharge program is to be performed, we can provide additional recommendations regarding a settlement monitoring plan, review settlement data, and recommend when the surcharge can be removed.

Lateral Resistance

Lateral loads on foundation elements can be resisted by passive resistance on the sides of footings and other below-grade structural elements and by friction on the base of footings. For footings founded as described above, the allowable frictional resistance may be computed using a coefficient of friction of 0.4 applied to vertical dead load forces. An equivalent fluid density of 250 pounds per cubic foot (pcf) may be used to estimate allowable passive resistance for properly compacted structural fill. These values include a factor of safety of about 1.5. The passive earth pressure and friction components may be combined, provided that the passive pressure component does not exceed two-thirds of the total. The top foot of soil should be neglected when calculating passive earth pressure unless the area is covered with pavement or slab-on-grade.

Footing Drains

We recommend that perimeter footing drains be installed around the proposed building. Footing drains should be designed to collect and direct water away from the perimeter of the building. Perimeter footing drains must consist of 4-inch-diameter perforated pipe and be installed at the base of the exterior building footings. We recommend that the drainpipe consist of either heavy-wall solid pipe (SDR-35 PVC, or equal) or rigid corrugated smooth interior polyethylene pipe (ADS N-12, or equal). We recommend against using flexible tubing for footing drainpipes. The drainpipe must be placed on a 3-inch bed of, and surrounded by, 6 inches of drainage material consisting of pea gravel or “Gravel Backfill for Drains” described in the “Fill Materials” section below. A non-woven geotextile fabric such as Mirafi 140N (or approved equivalent) must be placed between the drain rock and native soils to prevent fine soil from migrating into the drain material.

The perimeter drains must be sloped to drain by gravity to a suitable discharge point at or below the elevation of the base of the footing. Water collected in roof downspout lines must not be routed to the perimeter footing drain lines. Cleanout access must be provided periodically along the length of the drains. We recommend that the cleanouts be covered and be placed in flush-mounted utility boxes.

Floor Slabs and Mat Slabs

We understand that a mat slab has been chosen for this project and will be used primarily to manage differential settlements that could occur from the design earthquake and resulting liquefaction and liquefaction-induced settlements. Differential settlement estimates are provided previously. We recommend that all on-grade slabs be supported on at least 2 feet of structural fill. For final slab grade at Elevation 64 feet, it appears this will be accomplished based on the results of our explorations. The slab must be underlain by a minimum 6-inch-thick capillary break layer to reduce the potential for moisture migration into the slab. The capillary break material may be included in the 2 feet of structural fill. The material should be placed as recommended in the "Fill Placement and Compaction" section of this report. If dry slabs are required (e.g., where adhesives are used to anchor carpet or tile to the slab), a waterproof liner may be placed as a vapor barrier below the slab.

In our opinion, a modulus of subgrade reaction of 200 pounds per cubic inch (pci) can be used for designing building floor slabs provided that the subgrade consists of compacted structural fill and has been prepared in accordance with the "Site Development and Earthwork" section of this report. Values provided for foundation bearing may also be considered.

Ground Improvement

Reducing footing loads and placing a surcharge can reduce the potential for consolidation settlement of the structure but will not reduce the potential for liquefaction-induced settlement. Ground improvement techniques, such as rammed aggregate piers, stone columns and even closely spaced timber piles can be used to reduce the potential magnitude of both consolidation and liquefaction-induced settlement. This discussion is included for information.

An additional benefit of ground improvement is that typically, no preload is required after installation and the 6- to 8-week consolidation settlement period is not needed. Once installed, the spread footings and floor slab can typically be supported directly on the piers/columns without the need for subgrade or bearing surface improvements. Both of these methods involve displacing rather than replacing the natural soil. Accordingly, the resulting composite soil mass has improved strength and reduced compressibility under building loads.

We recently considered and discussed criteria for installation of timber piles as a ground improvement option, but it was determined that this method was not practical for this project as it would require several closely spaced piles and likely would not be cost effective.

Stone columns are a ground improvement method that can be constructed by several local contractors. Rammed aggregate piers are a ground improvement method proprietary to Geopier NW. The stone column technique uses a large vibrator to advance a probe to the design depth. Crushed aggregate is injected through the inside of the vibrator as it is removed. Compaction is achieved using vibration to create a stone column of crushed aggregate. For rammed aggregate piers a mandrel is driven into the soil to the design

depth. As the mandrel is withdrawn crushed aggregate is placed into the hole in thin lifts and compacted using a hydraulic ram to densify the crushed aggregate and create the rammed aggregate pier.

Another alternative are rigid inclusions, which generally involve placement of closely spaced grout columns to a certain depth, usually through drilling and are similar to construction of an augercast pile. Typically, there are no steel elements in the rigid inclusions, and they are not attached to the structure. Spacing is commonly similar to those of stone columns.

Ground improvements are typically designed to provide adequate support for the building loads and settlements. The primary design considerations include limiting total post-construction settlements to less than 1 inch and differential settlement to less than ½ inch over 50 feet.

Parking Area Construction Considerations

We anticipate that existing site grades will be raised to construct the new parking areas west and north of the proposed building. Based on current topography, existing grades may need to be raised on the order of 4 to 5 feet. We estimate that placing 4 to 5 feet of fill in the parking areas could cause 6 to 12 inches of settlement. We estimate that a majority of this settlement will take place within six to eight weeks of fill placement. We recommend that a temporary surcharge be placed on top of the fill in the parking areas to help reduce the potential for continued settlement after the parking area pavement is installed. A surcharge thickness of 2 feet should be considered.

If utility lines are planned within the parking area, we recommend that they be installed after consolidation settlement is completed and the surcharge has been removed. If utility lines are installed before settlement is complete, differential settlements of the installed utility lines could occur. Settlement of the fill and surcharge within the parking area should be monitored at several locations. This can be accomplished by setting settlement plates in the fill and taking survey elevation readings referenced to a benchmark well away from the surcharge fill. We recommend that the surcharge fill be left in place until most of the settlement has occurred. Based on our experience, we estimate this could take approximately 6 to 8 weeks. We are available to review settlement data and recommend when the surcharge can be removed.

Site Development and Earthwork

General

We anticipate that site development work will include removal of surficial organic soils, raising site grades to match design elevations, establishing subgrades, excavating for foundations and utility trenches and placing and compacting structural fill and backfill. The following sections provide recommendations for site development and earthwork.

Clearing and Stripping

Prior to site grading, areas to be developed should be stripped of loose organic-rich soil. Based on our observations, we estimate that the required stripping depth will be on the order of 2 to 4 inches in most areas at the site. Greater stripping depths may be required to remove localized zones of loose or organic rich soil, or existing fill containing deleterious material.

During clearing and stripping, loose and organic-rich soil should be removed as well as the primary root system of trees and other vegetation. If encountered, all deleterious material such as concrete and other debris must be removed.

Stripped material is not suitable for reuse as structural fill, however, it may be considered for use in landscaping areas.

Temporary Excavations, Support and Dewatering

Based on the soil types and consistencies of the materials encountered in our borings, shallow excavations will likely experience some caving. Groundwater seepage could occur if the excavations extend below about Elevation 58 feet (NAVD29). Regardless of soil type, excavations deeper than 4 feet must be shored or laid back at a stable slope if workers are required to enter. Shoring and temporary slope inclinations must conform to the provisions of Title 296 Washington Administrative Code (WAC), Part N, "Excavation, Trenching and Shoring." Regardless of the soil type encountered in the excavation, shoring, trench boxes or sloped sidewalls will be required under Washington Industrial Safety and Health Act (WISHA). The contract documents must specify that the contractor is responsible for selecting excavation and dewatering methods, monitoring the excavations for safety and providing shoring, as required, to protect personnel and structures.

In general, temporary cut and fill slopes must be inclined no steeper than about 1.5H:1V (horizontal:vertical). This guideline assumes that all surface loads are kept at a minimum distance of at least one-half the depth of the cut away from the top of the slope and that significant seepage is not present on the slope face. Flatter cut slopes will be necessary where significant seepage occurs or if large voids are created during excavation. Some sloughing and raveling of the temporary slopes should be expected. Temporary covering with heavy plastic sheeting should be used to protect slopes during periods of wet weather. Where 1.5H:1V temporary slopes are not feasible retaining structures should be considered.

Permanent Cut and Fill Slopes

We recommend that permanent cut and fill slopes be constructed at a maximum inclination of 2H:1V. Where 2H:1V permanent slopes are not feasible, retaining structures should be considered. Slopes should be re-vegetated as soon as practical to reduce surface erosion and sloughing. Temporary protection should be used until permanent protection is established. In order to achieve uniform compaction, we recommend that fill slopes be overbuilt and subsequently cut back to expose well-compacted fill.

Groundwater Handling Considerations

Based on observations during our exploration program we anticipate that groundwater could be encountered in excavations extending below about Elevation 58 feet (NGVD 29). Groundwater depth could vary depending on location, season, and precipitation conditions. Groundwater handling needs will generally be lower during the late summer and early fall months. Controlling groundwater with sumps, pumps, or diversion ditches may be adequate for shallow excavations that are only open for a short amount of time. For deeper excavations or excavations required to be open for an extended period of time, dewatering using well points or other methods may be required. Ultimately, we recommend that the contractor performing the work be made responsible for collecting and controlling groundwater.

Surface Drainage

Surface water from roofs, driveways and landscape areas should be collected and controlled. Curbs or other appropriate measures such as sloping pavements, sidewalks and landscape areas should be used to direct surface flow away from buildings and erosion sensitive areas. Roof and catchment drains should not be connected to foundation drains.

Erosion and Sedimentation Control

Potential sources or causes of erosion and sedimentation can be influenced by construction methods, slope length and gradient, amount of soil exposed and/or disturbed, soil type, construction sequencing and weather. Implementing an erosion and sedimentation control plan will reduce the project impact on erosion-prone areas. The plan should be designed in accordance with applicable city, county and/or state standards. The plan should incorporate basic planning principles, including:

- Scheduling grading and construction to reduce soil exposure.
- Re-vegetating or mulching denuded areas.
- Directing runoff away from denuded areas.
- Reducing the length and steepness of slopes with exposed soils.
- Decreasing runoff velocities.
- Preparing drainage ways and outlets to handle concentrated or increased runoff.
- Confining sediment to the project site.
- Inspecting and maintaining control measures frequently.

Some sloughing and raveling of exposed or disturbed soil on slopes should be expected. We recommend that disturbed soil be restored promptly so that surface runoff does not become channeled.

Temporary erosion protection should be used and maintained in areas with exposed or disturbed soils to help reduce erosion and reduce transport of sediment to adjacent areas and receiving waters. Permanent erosion protection should be provided by paving, structure construction or landscape planting.

Until the permanent erosion protection is established and the site is stabilized, site monitoring may be required by qualified personnel to evaluate the effectiveness of the erosion control measures and to repair and/or modify them as appropriate. Provision for modifications to the erosion control system based on monitoring observations should be included in the erosion and sedimentation control plan.

Subgrade Preparation

General

Subgrades should be thoroughly compacted to a uniformly firm and unyielding condition on completion of stripping and before placing structural fill or constructing building slabs or pavements. We recommend that subgrades for slabs on grade and pavements be evaluated, as appropriate, to identify areas of yielding or soft soil. Probing with a steel probe rod or proof-rolling with a heavy piece of wheeled construction equipment are appropriate methods of evaluation.

If soft or otherwise unsuitable subgrade areas are revealed during evaluation that cannot be compacted to a stable and uniformly firm condition, we recommend that: (1) the unsuitable soils be scarified (e.g., with a ripper or farmer's disc), aerated and recompacted, if practicable; or (2) the unsuitable soils be removed and replaced with compacted structural fill, as needed.

Subgrade Protection and Wet Weather Considerations

The wet weather season in western Washington generally begins in October and continues through May; however, periods of wet weather can occur during any month of the year. In our opinion, site grading and fill placement could be considered during wet weather, but it should be noted that some of the soils encountered in our explorations contain a significant amount of fines and will be susceptible to disturbance during wet weather. Soil with high fines content is very sensitive to small changes in moisture and is susceptible to disturbance from construction traffic when wet or if earthwork is performed during wet weather. If wet weather earthwork is unavoidable, we recommend that the following steps be taken.

- The ground surface in and around the work area should be sloped so that surface water is directed away from the work area. The ground surface should be graded so that areas of ponded water do not develop. Measures should be taken by the contractor to prevent surface water from collecting in excavations and trenches. Measures should be implemented to remove surface water from the work area.
- Earthwork activities should not take place during periods of heavy precipitation.
- Slopes with exposed soils should be covered with plastic sheeting.
- The contractor should take necessary measures to prevent on-site soils and other soils to be used as fill from becoming wet or unstable. These measures may include the use of plastic sheeting, sumps with pumps and grading. The site soils should not be left uncompacted and exposed to moisture. Sealing the surficial soils by rolling with a smooth-drum roller prior to periods of precipitation will help reduce the extent to which these soils become wet or unstable.
- Construction traffic should be restricted to specific areas of the site, preferably areas that are surfaced with working pad materials not susceptible to wet weather disturbance. Working pads can be constructed using quarry spalls or crushed rock.
- Construction activities should be scheduled so that the length of time that soils are left exposed to moisture is reduced to the extent practical.
- Protective surfacing such as placing asphalt-treated base (ATB) or haul roads made of quarry spalls or a layer of free-draining material such as well graded pit-run sand and gravel may be necessary to protect completed areas. Typically, minimum gravel thicknesses on the order of 24 inches are necessary to provide adequate subgrade protection.

During periods of wet weather, concrete should be placed as soon as practical after preparation of the footing excavations. Foundation bearing surfaces should not be exposed to standing water. Should water infiltrate and pool in the excavation, it must be removed before placing structural fill or reinforcing steel. Subgrade protection for foundations consisting of a lean concrete mat should be considered if footing excavations are exposed to extended wet weather conditions.

Fill Materials

General

Material used for fill must be free of debris, organic contaminants and rock fragments larger than 6 inches. The workability of material for use as fill will depend on the gradation and moisture content of the soil. Generally, soil with a higher fines content is more sensitive to changes in moisture. Below we provide recommendations for fill materials we anticipate will be used for this project. We recommend GeoEngineers review contractor submittals for alternate fill materials.

Structural Fill

We recommend that structural fill placed during wet weather consist of material of approximately the same quality as "Gravel Backfill for Walls," as described in Section 9-03.12(2) of the Washington State Department of Transportation (WSDOT) Standard Specifications.

Structural fill placed during dry weather may consist of material of approximately the same quality as "Gravel Borrow," as described in Section 9-03.14(1) of the WSDOT Standard Specifications.

Capillary Break

Capillary break material should consist of a well-graded sand and gravel, pea gravel, crushed rock, or recycled material with a maximum particle size of ¾ inch and less than 5 percent fines.

Pipe Bedding

We recommend trench backfill for the bedding and pipe zone consist of material of approximately the same quality as "Gravel Backfill for Pipe Zone Bedding," as described in Section 9-03.12(3) of the WSDOT Standard Specifications.

Trench Backfill

We recommend that all trench backfill consist of material of approximately the same quality as "gravel borrow" described in Section 9-03.14(1) of the WSDOT Standard Specifications. Weather conditions and/or the presence of groundwater seepage in trench excavations should be considered in selecting trench backfill materials. For wet conditions due to precipitation or seepage, we recommend weather resistant structural fill consist of material of approximately the same quality as "Gravel Backfill for Walls," as described in Section 9-03.12(2) of the WSDOT Standard Specifications.

Footing Drains

We recommend material used for footing drains and in the wall drainage zone be of approximately the same quality as "gravel backfill for drains" described in Section 9-03.12(4) of the WSDOT Standard Specifications.

Pavement Base Course

We recommend that all pavement base course consist of material of approximately the same quality as "crushed surfacing" described in Section 9-03.9(3) of the WSDOT Standard Specifications.

Pavement Subbase

Subbase material used to establish or repair conventional pavement subgrades during extended periods of dry weather may consist of material of approximately the same quality as "gravel borrow" described in Section 9-03.14(1) of the WSDOT Standard Specifications.

During the months of October through May or during periods of extended wet weather we recommend that pavement subbase consist of material of approximately the same quality as "gravel backfill for walls" described in Section 9-03.12(2) of the WSDOT Standard Specifications.

Crushed Rock

We recommend that crushed rock used below pavement sections or as capillary break under slabs-on-grade consist of material of approximately the same quality as "crushed surfacing (base course)" described in Section 9-03.9(3) of the WSDOT Standard Specifications.

Preload and Surcharge Fill

Because material used as preload fill will remain in place, preload fill placed in structural areas (pavements and buildings) should meet the requirements of structural fill as described above.

In general, any granular material can be used for surcharge fill provided it can be compacted to a firm condition suitable for construction traffic. Material with a high fines content may be suitable for use as a surcharge fill, however during periods of wet weather these soils may become saturated and difficult or impossible to rework and construction access across these soils could be limited.

If surcharge fill is to be reused as structural fill or backfill after the surcharge program is complete, the surcharge fill must conform to specifications for structural fill provided above.

On-Site Soil

Based on our subsurface explorations and experience, it is our opinion that existing mineral fill materials used to construct the fill pad at the site may be considered for use as structural fill only during periods of extended dry weather, provided they can be adequately moisture conditioned and placed and compacted as recommended and do not contain organic or other deleterious material. The materials observed in the fill pad contain a high percentage of fines and will be difficult to or impossible to compact when wet.

Native soils encountered in our borings near the ground surface were identified primarily as silt and silty sand. Additionally, we anticipate that most of the native soils at the site will likely have an in-situ moisture content higher than the optimum moisture content for compaction. Due to these factors and based on our experience at this and nearby sites, we do not recommend using the native site soils as structural fill or backfill.

Fill Placement and Compaction

General

To obtain proper compaction, fill soil should be compacted near optimum moisture content and in uniform horizontal lifts. Lift thickness and compaction procedures will depend on the moisture content and gradation characteristics of the soil and the type of equipment used. Silty soil or other fine granular soil may be difficult or impossible to compact during persistent wet conditions. Generally, 12-inch loose lifts are

appropriate for steel-drum vibratory roller compaction equipment. Compaction should be achieved by mechanical means. During fill and backfill placement, sufficient testing of in-place density should be conducted to check that adequate compaction is being achieved.

Fill must not be placed or compacted in excavations with standing water. If excavations are anticipated to extend below the groundwater table and dewatering will not occur, we can provide additional options for fill materials, placement and compaction based on the function of the fill (i.e., footings or trench backfill).

Area Fills and Pavement Bases

Fill placed to raise site grades and materials under pavements and structural areas should be placed on subgrades prepared as previously recommended. Fill material placed below structures and footings must be compacted to at least 95 percent of the theoretical maximum dry density (MDD) per ASTM International (ASTM) D 1557. Fill material placed below pavement sections must be compacted to at least 95 percent of the MDD. Fill material placed below and in landscaping areas should be compacted to a firm condition that will support construction equipment as necessary.

Trench Backfill

For utility excavations, we recommend that the initial lift of fill over the pipe be thick enough to reduce the potential for damage during compaction but generally should not be greater than about 18 inches. In addition, rock fragments greater than about 1 inch in maximum dimension should be excluded from this lift.

Trench backfill material placed below structures and footings must be compacted to at least 95 percent of the MDD. In paved areas, trench backfill must be uniformly compacted in horizontal lifts to at least 95 percent of the MDD in the upper 2 feet below subgrade. Fill placed below a depth of 2 feet from subgrade in paved areas must be compacted to at least 90 percent of the MDD. In non-structural areas, trench backfill should be compacted to a firm condition that will support construction equipment as necessary.

Conventional Asphalt Concrete Pavement

General

The conventional ACP sections recommended below are based on our experience. These pavement sections may not be adequate for heavy construction traffic loads such as those imposed by concrete transit mixers, dump trucks, or cranes. Additional pavement thickness may be necessary to prevent pavement damage during construction. The recommended sections assume that final improvements surrounding the conventional ACP will be designed and constructed such that stormwater or excess irrigation water from landscape areas does not infiltrate below the pavement section or pond on pavement surfaces.

Pavement subgrade should be prepared, placed and observed as previously described. Crushed rock base course and subbase should be moisture conditioned to near optimum moisture content and compacted to at least 95 percent of MDD (ASTM D 1577).

Crushed rock base course should conform to applicable sections of 4-04 and 9-03.9(3) of the WSDOT Standard Specifications. Hot mix asphalt should conform to applicable sections of 5-04, 9-02 and 9-03 of the WSDOT Standard Specifications.

Standard-Duty ACP – Automobile Driveways and Parking Areas

- 2 inches of hot mix asphalt, class ½ inch, PG 58-22
- 4 inches of crushed surfacing base course
- 6 inches of subbase consisting of select granular fill to provide uniform grading and pavement support, to maintain drainage, and to provide separation from fine grained subgrade soil
- Existing subgrade or structural fill prepared in accordance with the "Subgrade and Foundation Bearing Surface Preparation" section

Heavy-Duty ACP – Areas Subject to Heavy Truck Traffic

- 3 inches of hot mix asphalt, class ½ inch, PG 58-22
- 6 inches of crushed surfacing base course
- 6 inches of subbase consisting of select granular fill to provide a uniform grading surface and pavement support, to maintain drainage, and to provide separation from fine grained subgrade soil
- Existing subgrade or structural fill prepared accordance with the "Subgrade and Foundation Bearing Surface Preparation" section

Stormwater Infiltration

Stormwater Ponds

Infiltration facilities are being considered in areas to the west of the proposed parking areas. Exploration B-3 was located near one of the proposed infiltration areas. Shallow soils in boring B-3 consisted of gravel with silt and sand, silty sand, and silt. Silty sand and silt are not generally conducive to the infiltration of stormwater. Our preliminary evaluation indicates infiltration rates of less than 0.25 inches per hour. Additionally, we observed groundwater within 5 feet of the ground surface in B-3. Special considerations and additional analyses are required when designing infiltration facilities in locations with shallow groundwater (within 5 feet of ground surface). Based on these factors, it is our opinion that infiltration of stormwater near B-3 is not feasible at this site unless additional explorations and analyses are performed.

If infiltration pond facilities are planned as part of the new improvements we recommend that groundwater monitoring wells be installed to more accurately determine the groundwater location at the site, additional explorations be performed in an attempt to locate an area at the project site where existing soils are more conducive to infiltration and full-scale pilot infiltration testing (PIT) be performed at the site. We can provide additional details about monitoring well installation and PIT if requested.

Pervious Pavements

We expect that the fill (GM and SM) around the proposed structure, near Elevation 64 to about Elevation 59 will be suitable for infiltration in regard to pervious pavement design. We expect that the limiting subsurface condition around these borings will be due to the presence of groundwater observed during drilling between about Elevation 58 and 56 feet (NGVD 29). In our opinion, a design infiltration rate of

0.15 inches per hour is suitable for use of pervious pavements constructed around the preload fill pad provided that separation is maintained between the base of the facility and the underlying groundwater.

LIMITATIONS

We have prepared this report for St Andrew Catholic Church for the Parish Hall located in Sumner, Washington. Client may distribute copies of this report to Owner's authorized agents and regulatory agencies as may be required for the project.

Within the limitations of scope, schedule and budget, our services have been executed in accordance with generally accepted practices in the field of geotechnical engineering in this area at the time this report was prepared. The conclusions, recommendations, and opinions presented in this report are based on our professional knowledge, judgment and experience. No warranty or other conditions, express or implied, should be understood.

Please refer to Appendix C titled "Report Limitations and Guidelines for Use" for additional information pertaining to use of this report.

REFERENCES

ASTM International. 2014. Annual Book of Standards, Vol 4.08: Soil and Rock OR ASTM 2014. Annual Book of Standards, Vol 4.09: Soil and Rock.

Crandell, D.R., 1963, Surficial Geology and Geomorphology of the Lake Tapps Quadrangle, Washington: U.S. Geological Survey, Professional Paper PP-388-A, scale 1:24,000.

Dragovich, J.D., Washington Department of Natural Resources, Liquefaction Susceptibility Map for the Sumner Quadrangle (1995)

International Code Council. 2012 and 2015 "2012 and 2015 International Building Code."

Krazan and Associates, Inc., "Limited Geotechnical Engineering Investigation Proposed Rectory Project", July 23, 1012.

Merrit and Pardini, St Andrew Parish Building Plans, Issue Date August 14, 1998.

U.S. Seismic Design Maps, United States Geological Survey - Earthquake Hazards Program, (http://earthquake.usgs.gov/hazards/designmaps/grdmotion.php) Accessed April 26, 2015.

Washington State Department of Transportation, 2012, "Standard Specifications for Road, Bridge and Municipal Construction."

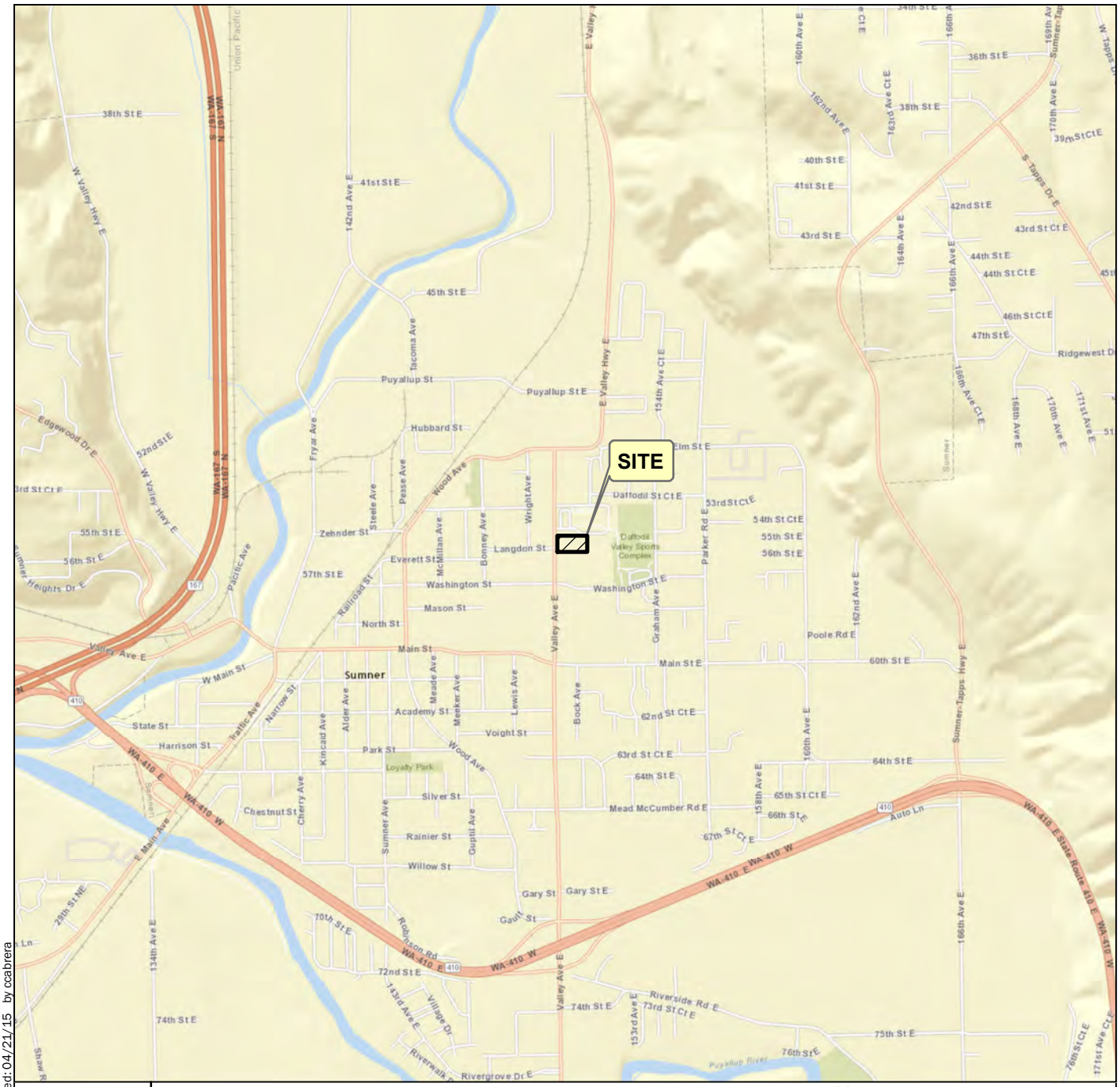

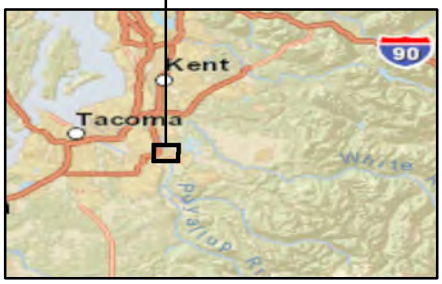

N
W E
S

2,000 0 2,000

Feet

Notes:

1. The locations of all features shown are approximate.
2. This drawing is for information purposes. It is intended to assist in showing features discussed in an attached document. GeoEngineers, Inc. cannot guarantee the accuracy and content of electronic files. The master file is stored by GeoEngineers, Inc. and will serve as the official record of this communication.

Data Source: ESRI Data & Maps

Projection: NAD 1983 UTM Zone 10N

Vicinity Map

St Andrew Catholic Church - Parish Hall
Sumner, Washington

GeoEngineers

Figure 1

\\tac\projects\21\21792001\GIS\MXD\2179000100_F1_VM.mxd Date Exported: 04/21/15 by ccabrera

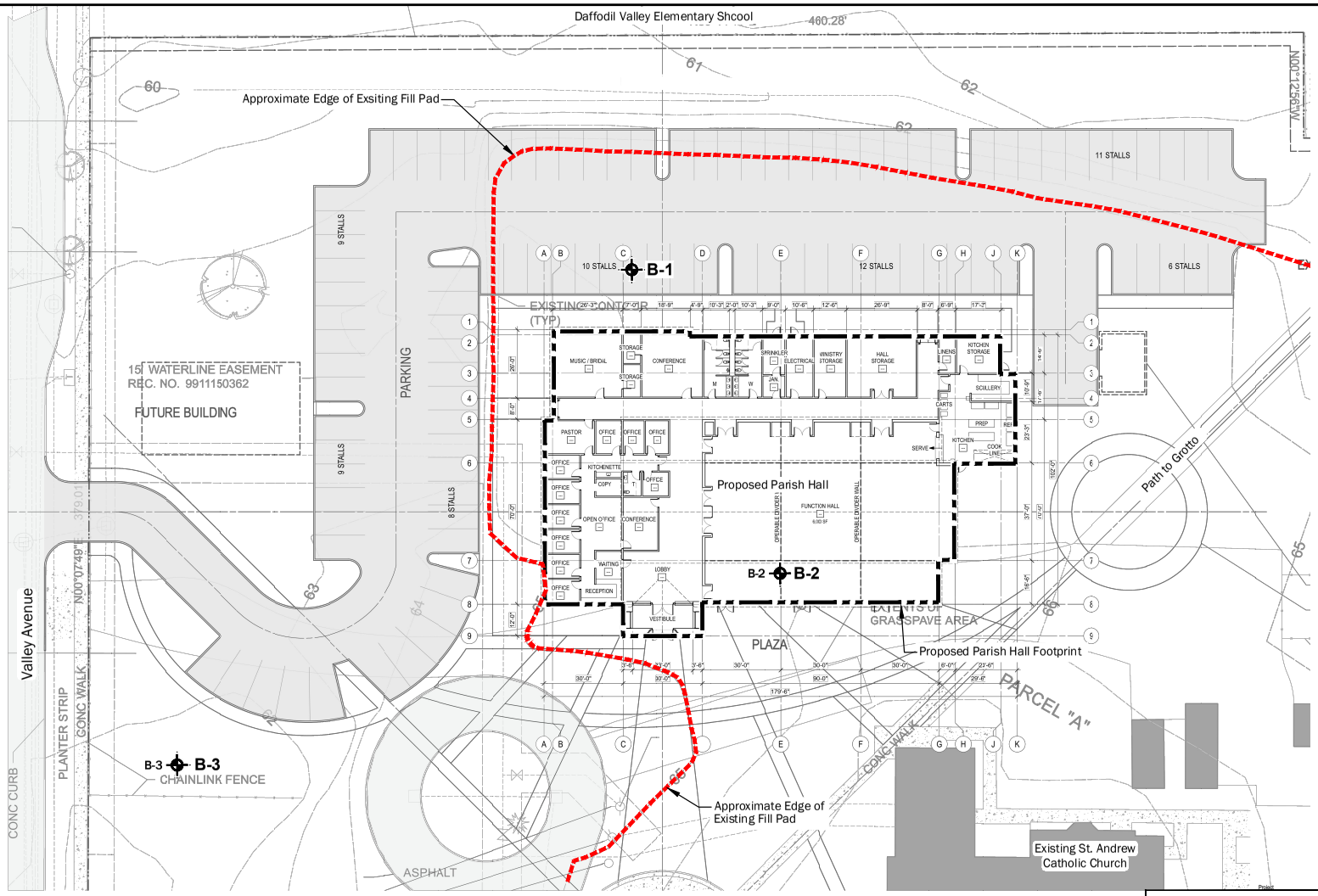

Notes:

1. The locations of all features shown are approximate.
2. This drawing is for information purposes. It is intended to assist in showing features discussed in an attached document. GeoEngineers, Inc. cannot guarantee the accuracy and content of electronic files. The master file is stored by GeoEngineers, Inc. and will serve as the official record of this communication.

Data Source:
Reference: Background image provided by RMC Architects, drawing A201, dated 3/12/2015.

N
W E
S

40 0 40
Feet

Legend

B-1 Boring by GeoEngineers, 2016

Proposed Parish Hall Footprint

Site Plan

St. Andrew Catholic Church - Parish Hall
Sumner, Washington

GEOENGINEERS

Figure 2

P:\21\21792001\00\CAD\03_Sheet Files\2179200100_F2.dwg TAB:F2 Date Exported: 11/21/16 - 8:31 by cvanslyke

APPENDIX A
Field Explorations

APPENDIX A
FIELD EXPLORATIONS

Subsurface conditions at the project site were explored by drilling three borings on April 6, 2015. During our exploration program our field representative obtained samples, classified the soils, maintained a detailed log of each exploration and observed groundwater conditions. The samples were retained in sealed plastic bags to prevent moisture loss. Figure A-1 includes a key to the exploration logs. Summary logs are included as Figures A-2 through A-4.

The explorations were advanced in locations near the proposed improvements. Explorations were located in the field by electronic global positioning system (GPS) and by pacing and visual triangulation from existing site features such a roadways and existing structures. The elevations presented on the exploration logs are based on topographic information shown on the plans (NGVD 29) provided by RMC Architects. The locations and elevations of the explorations should be considered approximate. Locations of the explorations are provided on the Site Plan, Figure 2.

Soil borings were drilled using equipment and operators under subcontract to GeoEngineers. A truck-mounted drill rig was used to drill borings B-2 and B-3. A track-mounted drill rig was required to access the location of B-1. Explorations were drilled using hollow-stem auger drilling methods. Disturbed soil samples were obtained from the borings using a 1.5-inch-inside-diameter split-spoon sampler driven into the soil using a 140-pound hammer free-falling a distance of 30 inches. The number of blows required to drive the sampler the last 12 inches or other indicated distance is recorded on the log as the blow count. Soil samples obtained from the borings were visually classified in general accordance with ASTM International (ASTM) D 2488.

All borings were backfilled by the driller following Washington State Department of Ecology guidelines. Soil cuttings generated from drilling activities were spread on site.

SOIL CLASSIFICATION CHART

MAJOR DIVISIONS			SYMBOLS GRAPH	SYMBOLS LETTER	TYPICAL DESCRIPTIONS
COARSE GRAINED SOILS MORE THAN 50% RETAINED ON NO. 200 SIEVE	GRAVEL AND GRAVELLY SOILS MORE THAN 50% OF COARSE FRACTION RETAINED ON NO. 4 SIEVE	CLEAN GRAVELS (LITTLE OR NO FINES)		GW	WELL-GRADED GRAVELS, GRAVEL - SAND MIXTURES
				GP	POORLY-GRADED GRAVELS, GRAVEL - SAND MIXTURES
		GRAVELS WITH FINES (APPRECIABLE AMOUNT OF FINES)		GM	SILTY GRAVELS, GRAVEL - SAND - SILT MIXTURES
				GC	CLAYEY GRAVELS, GRAVEL - SAND - CLAY MIXTURES
	SAND AND SANDY SOILS MORE THAN 50% OF COARSE FRACTION PASSING NO. 4 SIEVE	CLEAN SANDS (LITTLE OR NO FINES)		SW	WELL-GRADED SANDS, GRAVELLY SANDS
				SP	POORLY-GRADED SANDS, GRAVELLY SAND
		SANDS WITH FINES (APPRECIABLE AMOUNT OF FINES)		SM	SILTY SANDS, SAND - SILT MIXTURES
				SC	CLAYEY SANDS, SAND - CLAY MIXTURES
FINE GRAINED SOILS MORE THAN 50% PASSING NO. 200 SIEVE	SILTS AND CLAYS	LIQUID LIMIT LESS THAN 50		ML	INORGANIC SILTS, ROCK FLOUR, CLAYEY SILTS WITH SLIGHT PLASTICITY
				CL	INORGANIC CLAYS OF LOW TO MEDIUM PLASTICITY, GRAVELLY CLAYS, SANDY CLAYS, SILTY CLAYS, LEAN CLAYS
				OL	ORGANIC SILTS AND ORGANIC SILTY CLAYS OF LOW PLASTICITY
	SILTS AND CLAYS	LIQUID LIMIT GREATER THAN 50		MH	INORGANIC SILTS, MICACEOUS OR DIATOMACEOUS SILTY SOILS
				CH	INORGANIC CLAYS OF HIGH PLASTICITY
				OH	ORGANIC CLAYS AND SILTS OF MEDIUM TO HIGH PLASTICITY
HIGHLY ORGANIC SOILS				PT	PEAT, HUMUS, SWAMP SOILS WITH HIGH ORGANIC CONTENTS

NOTE: Multiple symbols are used to indicate borderline or dual soil classifications

ADDITIONAL MATERIAL SYMBOLS

SYMBOLS GRAPH	SYMBOLS LETTER	TYPICAL DESCRIPTIONS
	AC	Asphalt Concrete
	CC	Cement Concrete
	CR	Crushed Rock/ Quarry Spalls
	TS	Topsoil/ Forest Duff/Sod

Groundwater Contact

Measured groundwater level in exploration, well, or piezometer

Measured free product in well or piezometer

Graphic Log Contact

Distinct contact between soil strata or geologic units

Approximate location of soil strata change within a geologic soil unit

Material Description Contact

Distinct contact between soil strata or geologic units

Approximate location of soil strata change within a geologic soil unit

Sampler Symbol Descriptions

2.4-inch I.D. split barrel

Standard Penetration Test (SPT)

Shelby tube

Piston

Direct-Push

Bulk or grab

Continuous Coring

Blowcount is recorded for driven samplers as the number of blows required to advance sampler 12 inches (or distance noted). See exploration log for hammer weight and drop.

A "P" indicates sampler pushed using the weight of the drill rig.

Laboratory / Field Tests

%F	Percent fines
AL	Atterberg limits
CA	Chemical analysis
CP	Laboratory compaction test
CS	Consolidation test
DS	Direct shear
HA	Hydrometer analysis
MC	Moisture content
MD	Moisture content and dry density
OC	Organic content
PM	Permeability or hydraulic conductivity
PI	Plasticity index
PP	Pocket penetrometer
PPM	Parts per million
SA	Sieve analysis
TX	Triaxial compression
UC	Unconfined compression
VS	Vane shear

Sheen Classification

NS	No Visible Sheen
SS	Slight Sheen
MS	Moderate Sheen
HS	Heavy Sheen
NT	Not Tested

NOTE: The reader must refer to the discussion in the report text and the logs of explorations for a proper understanding of subsurface conditions. Descriptions on the logs apply only at the specific exploration locations and at the time the explorations were made; they are not warranted to be representative of subsurface conditions at other locations or times.

KEY TO EXPLORATION LOGS

GEOENGINEERS

FIGURE A-1

Drilled	Start 4/6/2015	End 4/6/2015	Total Depth (ft) 21.5	Logged By / Checked By BEL	Driller Holocene Drilling, Inc.	Drilling Method Hollow-Stem Auger
Surface Elevation (ft) / Vertical Datum	65 NGVD29		Hammer Data	Autohammer 140 (lbs) / 30 (in) Drop	Drilling Equipment	CME
Easting (X) / Northing (Y)			System Datum		Groundwater: Date Measured / Depth to Water (ft) / Elevation (ft)	See remarks
Notes:						

Elevation (feet)	Depth (feet)	Interval	Recovered (in)	Blows/foot	Collected Sample	Sample Name / Testing	Water Level	Graphic Log	Group Classification	MATERIAL DESCRIPTION	Moisture Content (%)	Fines Content (%)	REMARKS
65	0					1 SA			TS	Approximately 4 inches of topsoil and sod	10	25	
									GM	Brown silty fine to coarse gravel with sand, gravel and occasional cobbles (medium dense, moist) (fill)			
			4	11		2							
60	5		18	13		3			SM	Gray silty fine to coarse sand with occasional gravel (medium dense, moist) (fill)			
									ML	Gray sandy silt (very stiff, wet)			Groundwater observed at approximately 9 feet during drilling
55	10		18	17		4 %F					29	54	
									PT	Brown peat (soft, wet)			
			18	2		5 MC					235		
50	15					6 MC			CL	Gray clay with organic matter (soft, wet)	101		
						7 MC			PT	Brown to black peat (very soft, wet)	304		
									SM	Gray silty fine sand (loose, wet)			
45	20		18	8		8							

Note: See Figure A-1 for explanation of symbols.

Log of Boring B-1

GEOENGINEERS

Project: St Andrew Catholic Church - Parish Hall
Project Location: Sumner, Washington
Project Number: 21792-001-00

Figure A-2
Sheet 1 of 1

Drilled	Start 4/6/2015	End 4/6/2015	Total Depth (ft) 50.5	Logged By / Checked By BEL	Driller Holocene Drilling, Inc.	Drilling Method Hollow-Stem Auger
Surface Elevation (ft) / Vertical Datum	66 NGVD29		Hammer Data	Autohammer 140 (lbs) / 30 (in) Drop	Drilling Equipment	Mobile Drill, Truck Mounted
Easting (X) / Northing (Y)			System Datum		Groundwater: Date Measured / Depth to Water (ft) / Elevation (ft)	See remarks
Notes:						

Elevation (feet)	Depth (feet)	Interval	Recovered (in)	Blows/foot	Collected Sample	Sample Name / Testing	Water Level	Graphic Log	Group Classification	MATERIAL DESCRIPTION	Moisture Content (%)	Fines Content (%)	REMARKS
	0								TS	Approximately 4 inches of topsoil and sod			
65						1 SA			GM	Brown silty fine to coarse gravel with sand and occasional cobbles (medium dense, moist) (fill)	8	22	
			6	15		2			SM	Brown to gray silty sand with gravel and trace organic matter (grass) (medium dense, moist) (fill)			
60	5		18	14		3 %F					7	28	
									SM	Gray silty fine sand (loose, wet)			Groundwater observed at approximately 8 feet during drilling
55	10		18	7		4 %F					30	43	
						5 MC			PT	Black peat (very soft, wet)	219		
50	15		18	1		6 MC					209		
									ML	Gray silt with occasional sand and trace organic matter (grass) (medium stiff, wet)			
45	20		18	7		7 MC					42		
						8 MC			ML	Sandy silt (medium stiff, wet)	47		
									ML	Gray silt with occasional sand (medium stiff, wet)			
40	25		18	4		9 AL				Interbedded lense of silty fine to medium sand	38		AL (LL = 43; PI = 12)
35	30		18	1		10 MC				Grades to very soft	50		
									PT	Brown peat (very soft, wet)			
			10	2		11 MC					284		
						12 MC			OL	Brown organic silt (very soft, wet)	108		
						13 MC			SM	Gray silty fine to coarse sand with gravel (loose, wet)	21		
	35												

Note: See Figure A-1 for explanation of symbols.

Log of Boring B-2

GEOENGINEERS

Project: St Andrew Catholic Church - Parish Hall
Project Location: Sumner, Washington
Project Number: 21792-001-00

Figure A-3
Sheet 1 of 2

Elevation (feet)	Depth (feet)	Interval	Recovered (in)	Blows/foot	Collected Sample	Sample Name / Testing	Water Level	Graphic Log	Group Classification	MATERIAL DESCRIPTION	Moisture Content (%)	Fines Content (%)	REMARKS
	35		18	4		14 / SA					20	27	
-30													
	40		18	2		15				Grades to very loose			
-25													
										Grades to loose			
	45		18	9		16 / %F					19	27	
-20													
	50		6	7		17							

Note: See Figure A-1 for explanation of symbols.

Log of Boring B-2 (continued)

GEOENGINEERS

Project: St Andrew Catholic Church - Parish Hall
Project Location: Sumner, Washington
Project Number: 21792-001-00

Figure A-3
Sheet 2 of 2

Drilled	Start 4/6/2015	End 4/6/2015	Total Depth (ft) 21.5	Logged By / Checked By BEL	Driller Holocene Drilling, Inc.	Drilling Method Hollow-Stem Auger
Surface Elevation (ft) / Vertical Datum	61 NGVD29		Hammer Data	Autohammer 140 (lbs) / 30 (in) Drop	Drilling Equipment	Mobile Drill, Truck Mounted
Easting (X) / Northing (Y)			System Datum		Groundwater: Date Measured / Depth to Water (ft) / Elevation (ft)	See remarks
Notes:						

Elevation (feet)	Depth (feet)	Interval	Recovered (in)	Blows/foot	Collected Sample / Sample Name / Testing	Water Level	Graphic Log	Group Classification	MATERIAL DESCRIPTION	Moisture Content (%)	Fines Content (%)	REMARKS
61	0							GP-GM	Brown fine gravel with silt and sand (medium dense, moist) (fill)			
			18	2	1			SM	Brown silty fine to medium sand (very loose, moist)			
								ML	Brown silt with sand (soft, moist)			
60	5		0	0	2 %F				Grades to wet	40	84	Groundwater observed at approximately 5 feet during drilling
								OL	Brown organic silt (very soft, wet)			
55	10		18	1	3 MC					193		Approximate 2-inch-thick wood piece in shoe
								ML	Gray silt with occasional sand and trace organic matter (reeds) (soft, wet)			
50	15		18	3	4 MC					50		
45	20		18	4	5 MC					52		
40								SM	Gray silty fine to medium sand with trace organic matter (reeds) (loose, wet)			

Note: See Figure A-1 for explanation of symbols.

Log of Boring B-3

GEOENGINEERS

Project: St Andrew Catholic Church - Parish Hall
Project Location: Sumner, Washington
Project Number: 21792-001-00

Figure A-4
Sheet 1 of 1

APPENDIX B
Laboratory Testing

APPENDIX B
LABORATORY TESTING

Soil samples obtained from the explorations were transported to our laboratory and examined to confirm or modify field classifications, as well as to evaluate engineering properties of the soil. Representative samples were selected for laboratory testing. The following paragraphs provide a description of the tests performed at our laboratory.

Sieve Analysis (SA)

Grain-size distribution was evaluated by performing sieve analyses on selected soil samples in general accordance with ASTM International (ASTM) Test Method C 136. This test provides a quantitative determination of the distribution of particle sizes in soils. Figure B-1 present the results of the grain-size analyses.

Percent Passing U.S. No. 200 Sieve (%F)

Selected samples were "washed" through the U.S. No. 200 sieve to estimate the relative percentages of coarse- and fine-grained particles in the soil. The percent passing value represents the percentage by weight of the sample finer than the U.S. No. 200 sieve (fines). The tests were conducted in general accordance with ASTM D 1140. The results are shown on the exploration logs (Figures A-2 through A-4) at the respective sample depths.

Moisture Content (MC)

The moisture content of selected samples was determined in general accordance with ASTM D 2216. The test results are used to aid in determining the moisture content of the soil, soil classification and correlation with other pertinent engineering soil properties. The test results are presented on the exploration logs (Figures A-2 through A-4) at the respective sample depths.

Atterberg Limits (AL)

Atterberg Limits tests were performed on selected sample in general accordance with ASTM Test Method D 4318. This test method determines the liquid limit, plastic limit and plasticity index of soil particles passing the No. 40 sieve. The results of the limits test are used to assist in soil classification and engineering analyses. Figure B-2 provides results of the Atterberg Limit test.

21792-001-00 SAS: BEL 04-22-2015

GEOENGINEERS

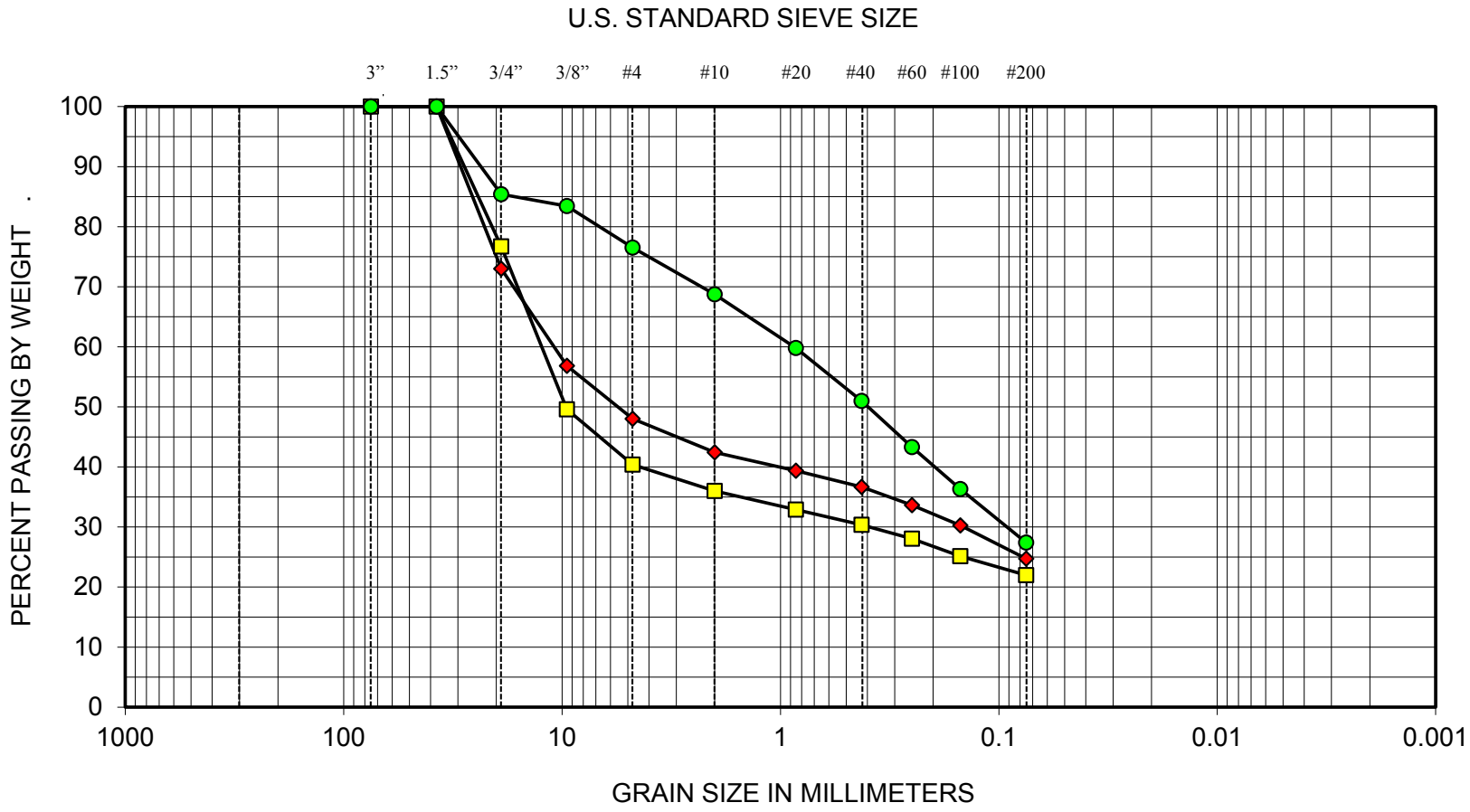

BOULDERS	COBBLES	GRAVEL		SAND			SILT OR CLAY
		COARSE	FINE	COARSE	MEDIUM	FINE	

SYMBOL	EXPLORATION NUMBER	DEPTH (ft)	SOIL CLASSIFICATION
◆	B-1	1	Silty gravel with sand (GM)
■	B-2	1	Silty gravel with sand (GM)
●	B-2	35	Silty sand with gravel (SM)

SIEVE ANALYSIS RESULTS

FIGURE B-1

21792-001-00 SAS: BEL 04-22-15

GEOENGINEERS

PLASTICITY CHART

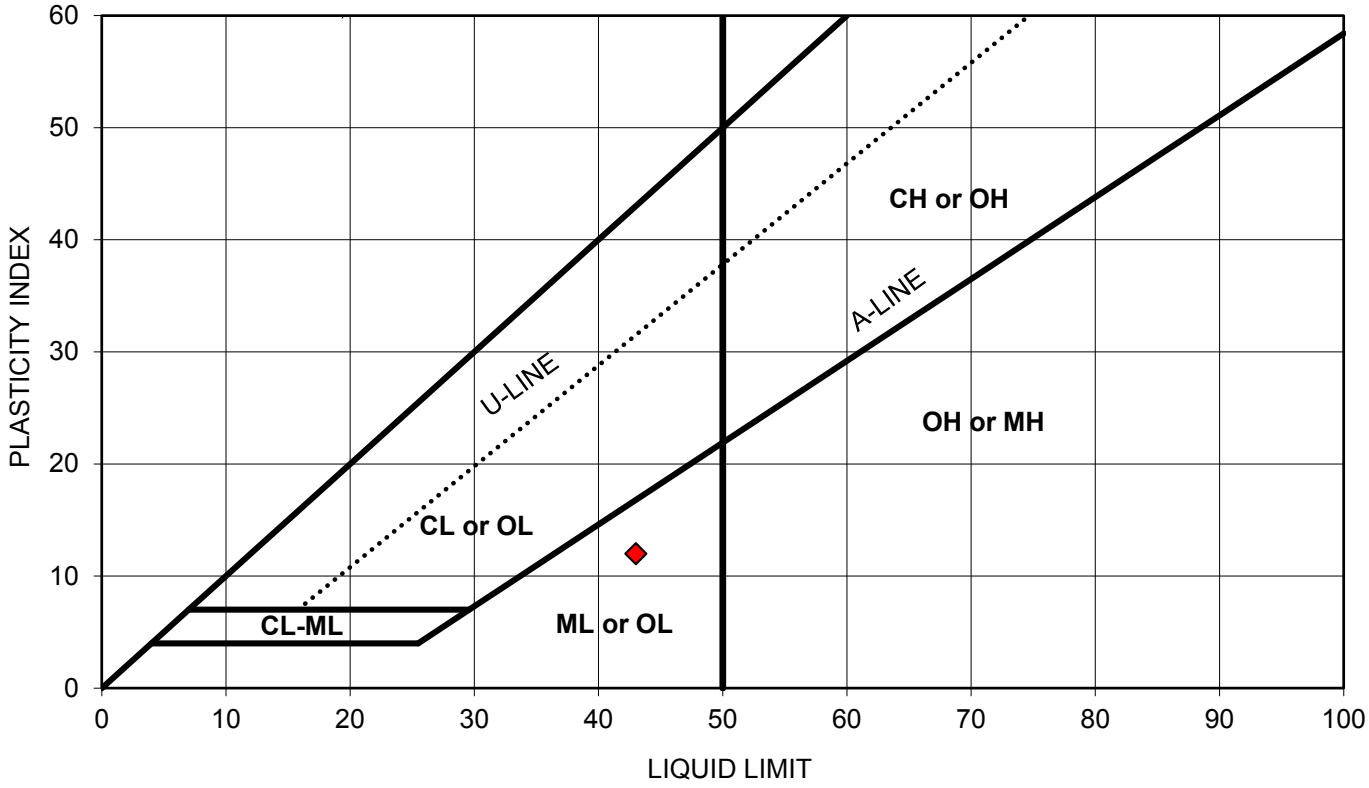

SYMBOL	EXPLORATION NUMBER	SAMPLE DEPTH (ft)	MOISTURE CONTENT (%)	LIQUID LIMIT (%)	PLASTICITY INDEX (%)	SOIL DESCRIPTION
◆	B-2	25	38	43	12	Silt (ML)

ATTERBERG LIMITS TEST RESULTS

FIGURE B-2

APPENDIX C
Report Limitations and Guidelines For Use

APPENDIX C
REPORT LIMITATIONS AND GUIDELINES FOR USE[1]

This appendix provides information to help you manage your risks with respect to the use of this report.

Read These Provisions Closely

It is important to recognize that the geoscience practices (geotechnical engineering, geology and environmental science) rely on professional judgment and opinion to a greater extent than other engineering and natural science disciplines, where more precise and/or readily observable data may exist. To help clients better understand how this difference pertains to our services, GeoEngineers includes the following explanatory "limitations" provisions in its reports. Please confer with GeoEngineers if you need to know more how these "Report Limitations and Guidelines for Use" apply to your project or site.

Geotechnical Services Are Performed for Specific Purposes, Persons and Projects

This report has been prepared for St Andrew Catholic Church and for the Project(s) specifically identified in the report. The information contained herein is not applicable to other sites or projects.

GeoEngineers structures its services to meet the specific needs of its clients. No party other than the party to whom this report is addressed may rely on the product of our services unless we agree to such reliance in advance and in writing. Within the limitations of the agreed scope of services for the Project, and its schedule and budget, our services have been executed in accordance with our Agreement with St Andrew Catholic Church dated February 13, 2015 and generally accepted geotechnical practices in this area at the time this report was prepared. We do not authorize, and will not be responsible for, the use of this report for any purposes or projects other than those identified in the report.

A Geotechnical Engineering or Geologic Report is Based on a Unique Set of Project-Specific Factors

This report has been prepared for St Andrew Catholic Church Parish Hall Project in Sumner, Washington. GeoEngineers considered a number of unique, project-specific factors when establishing the scope of services for this project and report. Unless GeoEngineers specifically indicates otherwise, it is important not to rely on this report if it was:

- not prepared for you,
- not prepared for your project,
- not prepared for the specific site explored, or
- completed before important project changes were made.

For example, changes that can affect the applicability of this report include those that affect:

- the function of the proposed structure;

1 Developed based on material provided by ASFE, Professional Firms Practicing in the Geosciences; www.asfe.org.

- elevation, configuration, location, orientation or weight of the proposed structure;
- composition of the design team; or
- project ownership.

If changes occur after the date of this report, GeoEngineers cannot be responsible for any consequences of such changes in relation to this report unless we have been given the opportunity to review our interpretations and recommendations. Based on that review, we can provide written modifications or confirmation, as appropriate.

Environmental Concerns Are Not Covered

Unless environmental services were specifically included in our scope of services, this report does not provide any environmental findings, conclusions, or recommendations, including but not limited to, the likelihood of encountering underground storage tanks or regulated contaminants.

Topsoil

For the purposes of this report, we consider topsoil to consist of generally fine-grained soil with an appreciable amount of organic matter based on visual examination, and to be unsuitable for direct support of the proposed improvements. However, the organic content and other mineralogical and gradational characteristics used to evaluate the suitability of soil for use in landscaping and agricultural purposes was not determined, nor considered in our analyses. Therefore, the information and recommendations in this report, and our logs and descriptions should not be used as a basis for estimating the volume of topsoil available for such purposes.

Subsurface Conditions Can Change

This geotechnical or geologic report is based on conditions that existed at the time the study was performed. The findings and conclusions of this report may be affected by the passage of time, by man-made events such as construction on or adjacent to the site, new information or technology that becomes available subsequent to the report date, or by natural events such as floods, earthquakes, slope instability or groundwater fluctuations. If more than a few months have passed since issuance of our report or work product, or if any of the described events may have occurred, please contact GeoEngineers before applying this report for its intended purpose so that we may evaluate whether changed conditions affect the continued reliability or applicability of our conclusions and recommendations.

Geotechnical and Geologic Findings Are Professional Opinions

Our interpretations of subsurface conditions are based on field observations from widely spaced sampling locations at the site. Site exploration identifies the specific subsurface conditions only at those points where subsurface tests are conducted or samples are taken. GeoEngineers reviewed field and laboratory data and then applied its professional judgment to render an informed opinion about subsurface conditions at other locations. Actual subsurface conditions may differ, sometimes significantly, from the opinions presented in this report. Our report, conclusions and interpretations are not a warranty of the actual subsurface conditions.

Geotechnical Engineering Report Recommendations Are Not Final

We have developed the following recommendations based on data gathered from subsurface investigation(s). These investigations sample just a small percentage of a site to create a snapshot of the subsurface conditions elsewhere on the site. Such sampling on its own cannot provide a complete and accurate view of subsurface conditions for the entire site. Therefore, the recommendations included in this report are preliminary and should not be considered final. GeoEngineers' recommendations can be finalized only by observing actual subsurface conditions revealed during construction. GeoEngineers cannot assume responsibility or liability for the recommendations in this report if we do not perform construction observation.

We recommend that you allow sufficient monitoring, testing and consultation during construction by GeoEngineers to confirm that the conditions encountered are consistent with those indicated by the explorations, to provide recommendations for design changes if the conditions revealed during the work differ from those anticipated, and to evaluate whether earthwork activities are completed in accordance with our recommendations. Retaining GeoEngineers for construction observation for this project is the most effective means of managing the risks associated with unanticipated conditions. If another party performs field observation and confirms our expectations, the other party must take full responsibility for both the observations and recommendations. Please note, however, that another party would lack our project-specific knowledge and resources.

A Geotechnical Engineering or Geologic Report Could Be Subject to Misinterpretation

Misinterpretation of this report by members of the design team or by contractors can result in costly problems. GeoEngineers can help reduce the risks of misinterpretation by conferring with appropriate members of the design team after submitting the report, reviewing pertinent elements of the design team's plans and specifications, participating in pre-bid and preconstruction conferences, and providing construction observation.

Do Not Redraw the Exploration Logs

Geotechnical engineers and geologists prepare final boring and testing logs based upon their interpretation of field logs and laboratory data. The logs included in a geotechnical engineering or geologic report should never be redrawn for inclusion in architectural or other design drawings. Photographic or electronic reproduction is acceptable, but separating logs from the report can create a risk of misinterpretation.

Give Contractors a Complete Report and Guidance

To help reduce the risk of problems associated with unanticipated subsurface conditions, GeoEngineers recommends giving contractors the complete geotechnical engineering or geologic report, including these "Report Limitations and Guidelines for Use." When providing the report, you should preface it with a clearly written letter of transmittal that:

- advises contractors that the report was not prepared for purposes of bid development and that its accuracy is limited; and
- encourages contractors to confer with GeoEngineers and/or to conduct additional study to obtain the specific types of information they need or prefer.

Contractors Are Responsible for Site Safety on Their Own Construction Projects

Our geotechnical recommendations are not intended to direct the contractor's procedures, methods, schedule or management of the work site. The contractor is solely responsible for job site safety and for managing construction operations to minimize risks to on-site personnel and adjacent properties.

Biological Pollutants

GeoEngineers' Scope of Work specifically excludes the investigation, detection, prevention or assessment of the presence of Biological Pollutants. Accordingly, this report does not include any interpretations, recommendations, findings or conclusions regarding the detecting, assessing, preventing or abating of Biological Pollutants, and no conclusions or inferences should be drawn regarding Biological Pollutants as they may relate to this project. The term "Biological Pollutants" includes, but is not limited to, molds, fungi, spores, bacteria and viruses, and/or any of their byproducts.

A Client that desires these specialized services is advised to obtain them from a consultant who offers services in this specialized field.

SECTION 03 10 00 - CONCRETE FORMING AND ACCESSORIES

PART 1 - GENERAL

1.1 SUMMARY

A. Products Installed but not Furnished Under this Section:
   1. Embedded anchors, inserts, hangers, bolts, and structural steel shapes shown and specified.
   2. Built-in sleeves, flashing, reglets, door frames, anchors, and related items.

B. Related Sections:
   1. Section 03 20 00 Concrete Refinishing
   2. Section 03 30 00 Cast-in-Place Concrete
   3. Divisions 21, 22, 23, and 26: Sleeves, inserts, anchors, hangers, bolts, and other embedded items specified shall be provided by the trade concerned and under the supervision of the Contractor.

C. Related Documents
   1. See Structural Notes in drawing set. In case of discrepancy, Structural Notes will govern.

1.2 REFERENCES

A. American Concrete Institute (ACI).
   1. ACI 347 - "Recommended Practice for Concrete Formwork."

B. International Building Code (IBC).

C. United States Product Standard (PS).
   1. PS-1 - "Softwood Plywood, Construction and Industrials."

D. Western Wood Products Association (WWPA).
   1. "Grading Rules for Lumber."

1.3 SYSTEM DESCRIPTION

A. Design Requirements: Contractor shall be solely responsible for the design and safety of forms, falsework supports, and reshoring procedures. Design shall be in accordance with recommendations of ACI 347. Ensure that members are not stressed more than allowed by IBC for materials used.

1.4 QUALITY ASSURANCE

A. Regulatory Requirements: Conform with applicable requirements of IBC Chapter 19, and as noted on Structural Drawings.

PART 2 - PRODUCTS

2.1 MATERIALS

A. Lumber: Stress grade marked Douglas Fir-Larch. Graded in accordance with WWPA.

B. Plywood: 5/8 inch minimum, 5-ply, BB Plyform, Class 1, conforming to PS-1.

C. Form Coatings: Non-staining, shall not cause dusting or softening of concrete surface. They shall produce a smooth, hard, non-oily concrete surface which will bond with concrete paints and cement coatings. Use of a form release agent of any substance which has not been specifically manufactured for that purpose is prohibited.

D. Form Ties and Spreaders: Metal cone nut type or as necessary to meet requirements for form design specified.

E. Rough hardware: Nails, bolts, screws, anchors, and similar items as required.

PART 3 - EXECUTION

3.1 ERECTION

A. Construct forms mortar tight, true to required lines, grades, and surfaces to obtain smooth, uniform concrete surfaces.

B. Set embedded items prior to concrete placement. Use setting drawings, diagrams, instructions, and directions provided by suppliers of the items to be attached thereto.

C. Shores and Braces: Install as necessary to support construction loadings and as required to maintain required tolerances. Comply with ACI 347.

D. Leave forms in place a minimum of 3 days before removal. Leave forms for suspended slabs in place at least 7 days or until concrete has attained 75 percent of its specified strength.

E. During period that forms are in place on concrete, keep wet at all times. Wet down concrete after removal of forms, and keep wet for 7 days after concrete is placed or spray with curing compound. Use trigger operated spray nozzles for water hoses.

F. Remove forms carefully to avoid damaging corners and edges of exposed concrete. Upon removal of forms cut off bolts, wires and other projections of formwork anchorage.

END OF SECTION

SECTION 03 20 00 - CONCRETE REINFORCING

PART 1 - GENERAL

1.1 SUMMARY

A. Related Sections
   1. Section 03 10 00 Concrete Forming and Accessories
   2. Section 03 30 00 Cast-in-Place Concrete

B. See Structural Notes in drawing set. In case of discrepancy, Structural Notes will govern.

1.2 REFERENCES

A. American Concrete Institute (ACI).
   1. ACI 301 - "Specifications for Structural Concrete for Buildings."
   2. ACI 318 - "Building Code Requirements for Reinforced Concrete."
   3. SP-66 - "ACI Detailing Manual."

B. ASTM International (ASTM).
   1. A 82 - "Specification for Steel Wire, Plain, for Concrete Reinforcement."
   2. A 185 - "Specification for Steel Welded Wire Reinforcement, Plain, for Concrete."
   3. A 615 - "Specification for Deformed and Plain Carbon-Steel Bars for Concrete Reinforcement."

C. Concrete Reinforcing Steel Institute (CRSI).
   1. "Manual of Standard Practice."

D. International Building Code (IBC).

1.3 SUBMITTALS

A. Shop Drawings: Show bar schedules, stirrup spacing, diagrams of bent bars, and arrangement and assemblies. Make Shop Drawings in accordance with ACI SP-66.

B. Mill Certificates: Accompanying Shop Drawings, submit steel producer's certificates of mill analysis, tensile, and bend tests for reinforcing steel, and conformance with ASTM Specifications.

1.4 QUALITY ASSURANCE

A. Regulatory Requirements: Conform with applicable requirements of IBC Chapter 19, and as noted on Structural Drawings.

1.5 DELIVERY, STORAGE, AND HANDLING

A. Deliver reinforcement to jobsite bundled, tagged, and marked. Use metal tags indicating bar size, lengths, and other information corresponding to markings shown on placement diagrams.

PART 2 - PRODUCTS

2.1 MATERIALS

A. Reinforcing Bars: In accordance with requirements of ASTM A 615, and as noted on Structural Drawings.

B. Steel Wire: Cold-drawn steel wire in accordance with requirements of IBC Chapter 19 and ASTM A 82.

C. Welded Wire Fabric: 6 by 6, 10 gage, cold-drawn wire in accordance with requirements of ASTM A 82, and A 185, F = 60,000 psi. Furnish in sheets, not rolls.

D. Tie Wire: American Wire 16-gage or heavier black annealed wire.

E. Supports for Reinforcement: Bolsters chairs, spacers, and other devices for spacing, supporting, and fastening reinforcement in place:
   1. Use wire bar type supports complying with CRSI recommendations, unless otherwise shown or specified. Do not use wood, brick or other similar materials.
   2. For slabs on grade, use concrete blocks or supports with sand plates or horizontal runners where base material will not support chair legs.
   3. For exposed-to-view concrete surfaces, where legs of supports are in contact with forms, provide supports with either hot-dip galvanized or plastic protected legs.

2.2 FABRICATION

A. Fabricate reinforcing bars to conform to required shapes and dimensions, with fabrication tolerances complying with CRSI. Provide elbow bars to lap horizontal bars at all corners and intersections. All hooks shall be "Standard" in accordance with ACI 318. In case of fabricating errors, do not re-bend or straighten reinforcement in a manner that will injure or weaken material.

PART 3 - EXECUTION

3.1 INSTALLATION

A. Place reinforcing steel in accordance with Drawings, reviewed Shop Drawings, and applicable requirements of codes and standards. Install reinforcement accurately and securely against movement, particularly under the weight of workers and the placement of concrete.

B. Clean reinforcement to remove loose rust and mill scale, earth, and other materials which might reduce or destroy bond with concrete.

C. Position, support, and secure reinforcement against displacement by formwork, construction, or concrete placement operations. Locate and support reinforcing by metal chairs, runners, bolsters, spacers, and hangers as required.

D. Welded Wire Fabric: Lap 12 inches at splices, Raise to middle of slab during pour.

E. Splices: Provide standard reinforcement splices by lapping ends, placing bars in contact, and tightly wire tying. Splice lengths shall be minimum of 40-diameters. Avoid splices of tensile reinforcement at or near points of maximum stress. Lap welded wire fabric 12 inches at splices. Splice locations not shown shall be reviewed and accepted before fabrication.

END OF SECTION

SECTION 03 30 00 – CAST-IN-PLACE CONCRETE

PART 1 - GENERAL

1.1 SUMMARY

A. Related Sections
   1. Section 03 10 00 Concrete Forming and Accessories
   2. Section 03 20 00 Concrete Reinforcing

B. Related Documents
   1. See Structural Notes in drawing set. In case of discrepancy, Structural Notes will govern.

1.2 REFERENCES

A. American Concrete Institute (ACI).
   1. ACI 301 - "Specifications for Structural Concrete for Buildings."
   2. ACI 304R - "Guide for Measuring, Mixing, Transporting, and Placing Concrete."
   3. ACI 318 - "Building Code Requirements for Reinforced Concrete."

B. ASTM International (ASTM).
   1. C 31 - "Practice for Making and Curing Concrete Test Specimens in the Field."
   2. C 33 - "Specification for Concrete Aggregates."
   3. C 39 - "Test Method for Compressive Strength of Cylindrical Concrete Specimens."
   4. C 94 - "Specification for Ready-Mixed Concrete."
   5. C 143 - "Test Method for Slump of Hydraulic-Cement Concrete."
   6. C 150 - "Specification for Portland Cement."
   7. C 172 - "Practice for Sampling Freshly Mixed Concrete."
   8. C 260 - "Specification for Air-Entraining Admixtures for Concrete."
   9. C 618 - “Specification for Coal Fly-Ash and Raw or Calcined Natural Pozzolan for Use in Concrete.”
   10. D 1751 - "Specification for Preformed Expansion Joint Filler for Concrete Paving and Structural Construction (Non-extruding and Resilient Bituminous Types)."

C. International Building Code (IBC).

1.3 SUBMITTALS

A. Mix designs, for each proposed mix, prepared by Testing Agency.

B. Plan and schedule of concrete placement. Show construction, contraction and expansion joints.

C. Fly-ash percentage.

1.4 QUALITY ASSURANCE

A. Regulatory Requirements: Conform with applicable requirements of IBC Chapter 19, and as noted on Structural Drawings.

1.5 PROJECT CONDITIONS

A. Unless adequate protection is provided and acceptance is obtained, concrete shall not be placed during rain, sleet, or snow.

B. Rainwater shall not be allowed to increase mixing water nor to damage surface finish.

C. When temperature of surrounding air is expected to be below 40 degrees F during placing or within 24 hours after placing, temperature of plastic concrete, as placed, shall be no lower than 55 degrees F for sections less than 12 inches in any dimension nor 50 degrees F for any other sections. Temperature of concrete as placed shall not exceed 90 degrees F.

PART 2 - PRODUCTS

2.1 MATERIALS

A. Portland Cement: Type I or II, ASTM C 150.

B. Standard Weight Aggregates: ASTM C 33 from acceptable pits. Maximum size used in a particular location shall be consistent with the form and dimensions of section being placed, with the location and spacing of reinforcing steel and with the method of vibration.

C. Fly-ash: ASTM C 618, Class C, between 20-25 percent of total cementitious material content by weight subject to requirements of mix design, approval of Architect, results of tests with actual materials, and applicable codes. Use post-industrial recycled content fly-ash is encouraged.

D. Water: Clean, potable, and free of deleterious materials.

E. Air Entraining Admixtures: ASTM C 260.

F. Curing Materials:
   1. Fiber reinforced asphaltic vapor barrier Kraft paper.
   2. Polyethylene sheet, 4-mil thickness.
   3. Curing Compound: Curecrete Chemical Company, Inc., Ashford Formula Concrete Treatment; or approved; compatible with finish flooring material adhesives.

G. Premolded Joint Filler: ASTM D 1751.

2.2 MIXES

A. The various concrete mixes to be used are as noted on Structural Drawings
   1. Provide air entrainment in all concrete subject to freezing after curing.
   2. Concrete mixes shall comply with ASTM C 94. Proportioning shall comply with Option C; mixing and transporting shall comply with requirements for Truck-Mixed Concrete.

2.3 SOURCE QUALITY CONTROL

A. Testing Laboratory will review mix designs, certificates of compliance, and samples.

PART 3 - EXECUTION

3.1 PREPARATION

A. Chip keys and roughen existing concrete surfaces where new concrete abuts.

B. Provide vapor retarder and slab casting base as specified in Section 07 26 00.

C. Remove foreign matter accumulated in forms. Wet wood forms sufficiently to tighten up cracks. Wet other materials sufficiently to reduce suction and maintain workability of concrete mix. Wet subgrade surfaces immediately prior to placing slabs on grade. Use trigger operated spray nozzles for water hoses.

3.2 INSTALLATION

A. Placing Concrete:
   1. Transport concrete from batching plant to place of final deposit as rapidly as practicable. Place concrete before initial set has occurred per ASTM C94 Guidelines.
   2. Pour all concrete monolithically unless shown otherwise or approved prior to placement.
   3. Convey concrete from mixer to forms as rapidly as possible and deposit as nearly as practicable in its final position by methods which will prevent segregation or loss of ingredients.
   4. Thoroughly vibrate and tamp concrete so that all parts of forms are filled and so that no voids remain in mass or on surface. Take special care to Work concrete through and around reinforcing steel. Provide concrete cover on reinforcing steel as follows:
      a. Concrete cast against and permanently exposed to earth - 3 inches.
      b. All other - 1-1/2 inches.
   5. Embed anchor bolts a minimum of 7 inches into concrete and hook.

B. Finishing Concrete:
   1. General: Vibrate to compact, screed, level, and tamp with a grid tamper to raise a thin mortar bed to the surface. Trowel after concrete has hardened sufficiently to prevent drawing moisture to the surface. Do not dust with dry materials.
   2. Interior Floor Slabs: Steel trowel and tool joints.
   3. Sidewalks, Exterior Slabs on Grade and Curbs: Steel trowel and medium broom finish.

C. Curing Concrete:
   1. Interior Slabs: Apply curing compound, cover and maintain free moisture for 7 days.
   2. Exterior Flatwork: Apply curing compound after finishing. Apply a second coat 24 hours after pouring.

D. Tolerances:
   1. Interior and Exterior Slabs: 1/4 inch in 10 feet.

E. Patching: Patch tie holes, defective pour joints, projections, and rock pockets immediately after form removal. Sack finish exterior exposed concrete surfaces, over 12 inches high, to blend with adjacent surfaces or as required by Architect because of voids or form lines.

3.3 FIELD QUALITY CONTROL

A. Testing Laboratory will perform slump tests in accordance with ASTM C 172 and C 143, and strength tests in accordance with ASTM C 31 and C 39.

END OF SECTION

SECTION 03 54 16 - HYDRAULIC CEMENT UNDERLAYMENT

PART 1 - GENERAL

1.1 SUMMARY

A. Section includes hydraulic-cement-based, polymer-modified, self-leveling underlayment for application below interior floor coverings.

B. Related Sections:
   1. Section 09 65 00 – Resilient Flooring

1.2 SUBMITTALS

A. Product Data: For each type of product indicated.

1.3 QUALITY ASSURANCE

A. Installer Qualifications: Installer who is approved by manufacturer for application of underlayment products required for this Project.

B. Product Compatibility: Manufacturers of underlayment and floor-covering systems certify in writing that products are compatible.

C. Floor level after completion shall comply with tolerances specified in Part 3 of this specification.

PART 2 - PRODUCTS

2.1 HYDRAULIC-CEMENT-BASED UNDERLAYMENTS

A. Underlayment: Hydraulic-cement-based, polymer-modified, self-leveling product that can be applied in minimum uniform thickness of 1/4 inch and that can be feathered at edges to match adjacent floor elevations.

   1. Products: Subject to compliance with requirements, provide one of the following:
      a. Bonsal American, an Oldcastle company; ProSpec Level Set LW-60.
      b. MAPEI Corporation; Ultraplan 1 Plus.
      c. RAECO, Inc.; S.L.U.
      d. Ardex K-15 Self leveling compound.
      e. LSM Construction Chemicals Inc. Levelex.

   2. Cement Binder: ASTM C 150, portland cement, or hydraulic or blended hydraulic cement as defined by ASTM C 219.

3. Compressive Strength: Not less than 4000 psi at 28 days when tested according to ASTM C 109/C 109M.
4. Underlayment Additive: Resilient-emulsion product of underlayment manufacturer, formulated for use with underlayment when applied to substrate and conditions indicated.

B. Aggregate: Well-graded, washed gravel, 1/8 to 1/4 inch; or coarse sand as recommended by underlayment manufacturer.

1. Provide aggregate when recommended in writing by underlayment manufacturer for underlayment thickness required.

C. Water: Potable and at a temperature of not more than 70 deg F.

D. Reinforcement: For underlayment applied to wood substrates, provide galvanized metal lath or other corrosion-resistant reinforcement recommended in writing by underlayment manufacturer.

E. Primer: Product of underlayment manufacturer recommended in writing for substrate, conditions, and application indicated.

PART 3 - EXECUTION

3.1 PREPARATION

A. General: Contractor to prepare and clean substrate according to manufacturer's written instructions.

1. Treat nonmoving substrate cracks to prevent cracks from telegraphing (reflecting) through underlayment.
2. Fill substrate voids to prevent underlayment from leaking.

B. Concrete Substrates: Mechanically remove laitance, glaze, efflorescence, curing compounds, form-release agents, dust, dirt, grease, oil, and other contaminants that might impair underlayment bond.

C. Adhesion Tests: After substrate preparation, test substrate for adhesion with underlayment.

3.2 APPLICATION

A. General: Mix and apply underlayment components according to manufacturer's written instructions.

1. Close areas to traffic during underlayment application and for time period after application recommended in writing by manufacturer.
2. Coordinate application of components to provide optimum underlayment-to-substrate and intercoat adhesion.

3. At substrate expansion, isolation, and other moving joints, allow joint of same width to continue through underlayment.

B. Apply primer over prepared substrate at manufacturer's recommended spreading rate.

C. Apply underlayment to produce uniform, level surface.

1. Concrete shall be level within .25” over a 50 foot span.
2. Apply a final layer without aggregate to product surface.
3. Feather edges to match adjacent floor elevations.
4. True-to-edge maximum gap between floor and straight edge = 0.0625”.

D. Cure underlayment. Prevent contamination during application and curing processes.

E. Do not install floor coverings over underlayment until after time period recommended in writing by underlayment manufacturer.

F. Remove and replace underlayment areas that evidence lack of bond with substrate, including areas that emit a "hollow" sound when tapped.

END OF SECTION

SECTION 04 05 13 – MASONRY MORTARING

PART 1 - GENERAL

1.1 SUMMARY

A. Related Sections:
   1. Brick Masonry: Section 04 21 13.

B. Related Documents:
   1. See Structural Notes in drawing set. In case of discrepancy, structural notes govern.

1.2 REFERENCES

A. ASTM International (ASTM).
   1. C 91 - "Specification for Masonry Cement."
   2. C 144 - "Specification for Aggregate for Masonry Mortar."
   3. C 150 - "Specification for Portland Cement."
   4. C 270 - "Specification for Mortar for Unit Masonry."
   5. C 404 - "Specification for Aggregates for Masonry Grout."

B. International Building Code (IBC).

1.3 SUBMITTALS

A. Certificates: If ready-mixed mortar is used, furnish certificates from mixing plant stating that mortar delivered to Project conforms to these specifications.

1.4 QUALITY ASSURANCE

A. Regulatory Requirements: Requirements of (IBC), latest edition, if more rigid than those herein, govern.

PART 2 - PRODUCTS

2.1 MATERIALS

A. Portland Cement: IBC Chapter 19, and ASTM C 150, Type I and III.

B. White Cement and Non-staining Waterproof Cement: "Atlas", "Medusa", "Trinity", or approved.

C. Lime: Comply with ASTM C 207, Type N & S.

D. Masonry Cement: Comply with ASTM C 91, Type I.

E. Mortar Color: Inorganic mineral oxides, Frank Davis, "True Tone"; Horn, "Staybrite"; Lambert, "Dry Cement Color"; or approved. Color added shall not exceed manufacturer's recommendations.

F. Waterproofing Admixture: Ammonium stearate compound, Sonneborn, "Hydrocide" powder or paste; Horn, "Hydratite" liquid, powder or paste; Chem-Master's, "Hydrolux 400"; or approved. Follow manufacturer's recommendations.

G. Accelerating Admixture: Sika, "Plastiment"; Horn, "Daratard"; Sonneborn, "Sonotard"; or approved. Follow manufacturer's recommendations.

H. Aggregates for Mortar: Comply with ASTM C 144, and with ASTM C 404 for grout.

I. Water: Clean and potable.

J. Other Materials:
1. Conform to requirements of International Building Code. Obtain Architect's approval of any materials not specified.
2. Any so-called "anti-freeze" ingredients are absolutely prohibited.

K. Mortar for Unit Masonry and Reinforced Masonry:
1. Conform to ASTM C 270.
   a. Special inspection required. Use proprietary specification.
   b. Other Work: Use mix proportions specified.

L. Mortar Type "S" (1800 psi in 28 days) for Brick Veneer:
1. Parts by Volume:
   a. 1 Portland Cement or Columbia Buff.
   b. 1/4 minimum, 1/2 maximum hydrated lime or lime putty.
   c. Damp, loose aggregate not less than 2-1/4 and not more than 3 times the sum of volumes of cement and lime used.
   d. Submit exact proportions for approval.

M. Pointing Mortar:
1. Mix proportions:
   a. Portland Cement or Columbia Buff: 1 cu. ft.
   b. Lime Putty: 1/8 cu. ft.
   c. 80 mesh silica sand: 3 cu. ft.
   d. Color: As required.

N. Grout for Grouted Masonry: Select and submit for approval mix proportions to produce grout having pouring consistency without segregation and strength as noted on Structural Drawings. Minimum grout mix shall contain one part Portland Cement, three parts dry, loose sand with from 1 to 2 parts pea-gravel. Increase cement content if required to obtain designated strengths. When grout is to be placed in masonry units with typical rates of absorption, slump of the grout shall be approximately 9 to 10 inches depending on temperature and humidity conditions.
1. Use fine grout in spaces less than 2 inch horizontal dimension.
2. Use coarse grout (pea-gravel) in spaces greater than 2 inch.

O. Additives:
   1. Mortar Color: Add color selected by Architect in proportions recommended by manufacturer, as directed. Match existing mortar of adjacent brickwork.
   2. Accelerator: Type III High-Early-Strength cement. Submit mix proportions in writing and obtain Architect's written approval before proceeding.
   3. Fluidity Admixture or water reducing admixture at Contractor's option with approval of Architect. In accordance with manufacturer's recommendation.
   4. Usage of Additives: Only to be mixed when required by adverse weather conditions and when permitted.

P. Mixing:
   1. Mix mortar and grout thoroughly for five minutes minimum. Adjust mortar consistency to satisfaction of mason; add minimum water only for workability. Retemper stiffening mortar by adding water and remixing. At placement, grout consistency shall be sufficiently plastic to fill voids completely. Use mortar and grout within two hours of initial mixing; use no mortar or grout that has begun to set. Do not retemper after this time. Measure proportions exactly; no "by the shovel-full" measuring. Use mechanical agitators for mixing.
   2. Protect all materials during storage and during use from harmful weather conditions. The best of workmanship is expected with mortar and masonry Work.

2.2 SOURCE QUALITY CONTROL

A. Testing of Mortar and grout by Testing Laboratory shall conform to ASTM C 91 and other ASTM standards specified. Make three compression strength tests for each type of mortar to be used.

PART 3 - EXECUTION NOT USED

END OF SECTION

SECTION 04 21 13 – BRICK MASONRY

PART 1 - GENERAL

1.1 RELATED SECTIONS

A. Masonry Mortaring: Section 04 05 13.

1.2 RELATED DOCUMENTS

A. See Structural Notes in drawing set. In case of discrepancy, structural notes govern.

1.3 REFERENCES

A. ASTM International (ASTM).
   1. C 67 - "Test Methods for Sampling and Testing Brick and Structural Clay Tile."
   2. C 216 - "Specification for Facing Brick (Solid Masonry Units Made From Clay or Shale)."
   3. C 270 - "Specification for Mortar for Unit Masonry."

B. International Building Code (IBC).

1.4 SUBMITTALS

A. Samples of face brick showing ranges of color variation.

B. Certificates indicating compliance of materials and mix with this specification, and efflorescence and freeze thaw testing in accordance with ASTM C 67.

1.5 QUALITY ASSURANCE

A. Regulatory Requirements: Conform with applicable requirements of IBC Chapters 21, and 14.

B. Sample Panel: Build a sample panel to verify selections made under Sample submittals and do demonstrate aesthetic effects. Comply with requirements in Section 01 45 00 “Quality Requirements” for mockups.
   1. Build sample panels for typical exterior wall in sizes approximately 48 (1200mm) inches long by 24 inches (600mm) high by full thickness.

1.6 DELIVERY, STORAGE, AND HANDLING

A. Deliver dry and protect from dampness. Store off the ground. Damaged or contaminated materials shall not be used.

1.7 PROJECT CONDITIONS

A. Environmental Conditions:
   1. Rainy weather: Perform all Work under cover.
   2. Cold Weather: Perform all Work in heated enclosures when air temperature is below 40 degrees F. Maintain temperature of enclosure at 40 degrees F for 48

hours minimum after completion of Work for Type M mortar. Time may be reduced 24 hours if Type III mortar is used. Do not lay frozen material.

PART 2 - PRODUCTS

2.1 MATERIALS

A. Brick Masonry Units:
   1. Standard Modular Face Brick (Typical): Mission finish face, stiff mud process, shale or clay, compressive strength 1350 psi, nominal 7-5/8 inch by 2-1/4 inch by 3-5/8 inch depth, ASTM C 216, Grade SW, Type FBS. Colors (verify Rendondo Grey) and sizes as selected to match existing Parish Church.
   2. Provide special sizes and shapes to match existing Parish Church. Cut brick as required to fit steel lintel supports.

B. Mortar: Specified in Section 04 05 13.

C. Reinforcement: Brick installation shall meet IBC 1405 requirements for seismically anchored veneer.

D. Accessories:
   1. Miscellaneous Anchors and Ties: Galvanized sheet steel, sizes and types as required.
   2. Morat Nets, Cell Vents and Weep Tubes as required.

E. Brick Cleaner: Fabrikem Masonry Cleaner or approved. Match type to brick color.

PART 3 - EXECUTION

3.1 PREPARATION

A. Foundations:
   1. Provide clean, level surface. Sandblast as required to remove laitance or other foreign material lodged in pores or on surfaces.
   2. Elevations shall be such that bed joints do not vary more than 1/4 inch to 3/4 inch.
   3. Foundation edge shall be true to line so that masonry units do not project more than 1/4 inch.

3.2 INSTALLATION

A. Laying Brick Masonry units:
   1. Install plumb, level, and true to line with all corners and angles square unless otherwise shown.
   2. Use line blocks whenever possible. If drift pins are used fill holes in joints with mortar immediately after pins are withdrawn.
   3. All units shall be clean and free of dust, dirt, or other foreign materials before laying.
   4. Accurately execute all pattern Work, bonds, or special detail shown. Set signs and special items as directed.

5. Bevel mortar for all bed joints, slope toward center of wall to ensure bed joint will be filled when units are brought to line. Furrowing of bed joints is not permitted. Avoid protrusion of fins of bed joint mortar into veneer spaces. Leave in place if not projecting more than bed joint thickness. In no case shall protrusions be cut off and allowed to drop into space below.
6. Completely fill all head joints with mortar, regardless of thickness. Shove all units in stretcher (flat-wise) courses into place. Lay outer wythes of brick walls to a line. Relay units that are moved or shifted in fresh mortar.
7. Jointing: Lay units in running bond with 3/8 inch, tooled, concave, horizontal and vertical joints.

B. Weep Holes: Provide in vertical joints of first exterior course above grade and over flashing joints and other obstruction lines. Locate at 48 inches on center. Fill bottom of cavity with 3 inches of washed pea gravel to prevent clogging.

C. Anchors For Masonry Veneer over Concrete: Provide anchors at 24 inches on center vertically. Locate in alternate courses.

D. Completion Each Day: Bring facing and backing to same level. Cover tops of walls with non-staining waterproof covering, (not polyethylene). When Work is resumed clean top surfaces of loose mortar before proceeding.

3.3 CLEANING

A. Dry brush concrete unit masonry surfaces after mortar has set, at end of each days Work, and after final pointing. Do not fill weep holes.

B. Cleaning:
1. Thoroughly saturate walls with clean water. Cover adjacent materials.
2. Mix Cleaner in non-metallic containers, in accordance with manufacturer's instructions. Test a small area in an inconspicuous place for desired results.
3. Apply cleaner in accordance with manufacturer's recommendations. Clean walls from bottom up. Do not use pressure washer to apply cleaning solution.
4. Scrub and scrape off excess mortar deposits with scrub brushes and wooden scrapers. Do not use metal tools. Avoid scrubbing mortar joints.
5. Rinse thoroughly from top to bottom. Keep brick below area being cleaned thoroughly soaked. Re-apply cleaning solutions as necessary.

END OF SECTION

SECTION 04 27 00 – GLASS BLOCK MASONRY

PART 1 - GENERAL

1.1 SUMMARY

A. Section Includes:
1. Glass Block Units
2. Integral Joint Reinforcement
3. Mortar
4. Sealants

B. Related Sections
1. Section 01 81 13 Sustainable Requirements
2. Section 04 05 13 Masonry Mortaring
3. Section 07 92 00 Joint Sealants
4. Section 08 11 00 Metal Doors and Frames

C. Reference Standards
1. ASTM A82—Spec. for Cold Drawn Steel Wire
2. ASTM A153—Class B-2, Spec. Zinc Coating (Hot dip) on iron and steel hardware
3. ASTM C144, Spec. for Aggregate for Masonry
4. ASTM C150, Spec. for Portland Cement
5. ASTM E163, Fire Test of Window Assemblies (equivalent to UL 9)
6. ASTM C207, Spec. for Hydrated Lime for Masonry Purposes
7. ASTM C270, Spec. for Mortar for Unit Masonry
8. ASTM D1187, Type II—Spec. for Asphalt-Base Emulations (For Metal Surfaces)
9. ASTM D1227, Type III—Spec. for Emulsified Asphalt (For Porous Surfaces)

1.2 SYSTEM DESCRIPTION

A. Knowledge of the following basic information is essential for proper installation of Glass Block units:
1. Glass block panels shall not be designed to support structural loads.
2. Maximum deflection of structural members supporting glass block panels shall not exceed L/600
3. Sills of all panels must be painted with a heavy coat of asphalt emulsion and must dry for two hours before first mortar bed is placed.
4. Provision for expansion and movement must be made at jambs and heads of all panels. Mortar must not bridge expansion spaces.
5. Mortar should be mixed and applied in accordance with the recommendations of manufacturer.

1.3 SUBMITTALS

A. Product Data: For each type of product.

1. Submit two (2) copies of manufacturer's literature and two (2) copies of manufacturer's installation instructions.
2. Submit two (2) glass block units of each type specified, showing size, design and pattern of faces.
3. Submit representative samples of panel reinforcing, panel anchors, expansion strips, and sealant.

1.4 STORAGE AND PROTECTION

A. Store unopened cartons of glass block in a clean, cool, dry area.

B. Protect opened cartons of glass block against windblown rain or water run-off with tarpaulins or plastic covering.

1.5 SITE CONDITIONS

A. Do not install glass block units when temperature is 40°F (4°C) and falling. Maintain the temperature of glass unit masonry above 40°F (4°C) for the first 48 hours after construction.

1.6 WARRANTY

A. Provide warranty information for installation and

PART 2 - PRODUCTS

2.1 PERFORMANCE REQUIREMENTS

A. Glass block units, nominally 8 inch x 8 inch x 4 inch thick shall be partially evacuated hollow units made of clear, colorless glass with a polyvinyl butyral edge coating.

B. Pattern type: Vue Block, Standard Premier Series by Pittsburg Corning as Design Standard.

2.2 ACCESSORIES

A. Panel Reinforcing: two parallel 9 gauge wires either 1-5/8 inch or 2 inch on center with electrically butt-welded crosswires spaced at regular intervals, hot dipped galvanized after welding.

B. Panel Anchors: 20 gauge perforated steel strips 24 inches long by 1-3/4 inches wide, hot dipped galvanized after perforation.

C. Expansion Strips: made of polyethylene foam with a thickness of 3/8 inch

D. Asphalt Emulsion: a water-based asphalt emulsion, by Karnak Chemical Corp. (Karnak 100, 1-800-526-4236), or equal.

E. Sealant (caulk): non-staining, waterproof mastic, silicone type.

F. Below is a list of potential sealant manufacturers:
   1. Dow Corning Corporation, 1-800-248-2481 in Midland, MI
   2. General Electric, 1-800-255-8886, in Waterford, NY
   3. Sonneborn Building Products, 1-800-243-6739 in Minn., MN
   4. Tremco Incorporated, 1-800-321-7906 in Beachwood, OH Below is the name of the fire retardant sealant used on glass block fire tests:
   5. Fyre-Sil Silicone Sealant, by Tremco, Inc. (1-800-321-7906)

G. Packing (Backer Rods): polyethylene foam, neoprene, fibrous glass or equal as approved by sealant manufacturer.

2.3 MORTAR

A. Mortar: Type S in accordance with ASTM C270. Mortar shall be 1 part Portland Cement, 1/2 part lime, and sand equal to 2-1/4 to 3 times the amount of cementitious material (cement plus lime), all measures by volume. (For exterior glass block panels, an integral type waterproofer should be added to the mortar mix.) No antifreeze compounds or accelerators allowed.

B. NOTE: All model building codes also accept the use of Type N mortar.

C. Portland Cement: Type 1 in accordance with ASTM C150. If a waterproof Portland Cement is used, the integral type water- proofer shall be omitted. (Masonry Cement is not recommended.) Color: white.

D. Lime: Type S, in accordance with ASTM C207. Shall be a pressure-hydrated dolomitic lime, provided that not less than 92% of all the active ingredients are completely hydrated.

E. Sand: A clean, white quartzite or silica type, essentially free of iron compounds, in accordance with ASTM C144, not less than 100% passing a No. 8 sieve.

F. Integral Type Water-repellent: Stearate type by Sonneborn Building Products (Hydrocide Powder, 1-800-243-6739), or equal. Note: Add hydrocide powder to dry mortar mix. Do not add powder to wet mortar mix.

G. External Type Water proofer: Water based silane sealer type by Sonneborn Building Products (HYDROZO ENVIROSEAL™ 20, 1-800-243-6739). Note: Remove excess sealer from glass surfaces soon after application.

PART 3 - EXECUTION

3.1 PREPARATION

A. Verify that channels and/or panel anchors have been provided at head and jambs for the purpose of providing panel support within the opening.

B. Mix all mortar components to a consistency that is drier than mortar for ordinary masonry. Retempering the mortar after it has taken its initial set shall not be permitted. Do not use antifreeze compounds or accelerators.

C. Freshly mixed mortar may create skin irritation. Avoid direct contact where possible and wash exposed skin areas promptly with water. If any mortar gets into the eyes, rinse immediately with water and get prompt medical attention.

3.2 INSTALLATION, GENERAL

A. Cover sill area with a heavy coat of asphalt emulsion. Allow emulsion to dry at least 2 hours before placing mortar.

B. Where panel anchors are used at jambs and heads in lieu of channel or chase surrounds, install panel anchors in the same joints (16 inches o.c. maximum) where panel reinforcing will be laid.

C. Place or adhere expansion strips to jambs and head. Make certain expansion strip extends to sill and covers leg of panel anchor which is attached to jambs and head.

D. Set a full mortar bed joint, applied to sill.

E. Set lower course of block. Maintain a uniform joint width of 1/4 to 3/8 inch plus or minus 1/8 inch. All mortar joints must be full and not furrowed. Steel tools must not be used to tap blocks into position. Do not realign, tap or otherwise move block after initial placement. For Solid glass block units, typical mortar joint is 3/8 inch. Special spacers that provide a 3/8 inch thick mortar joint are available.

F. Install panel reinforcing every 16 inches o.c. maximum in the horizontal mortar joint and in joints immediately above and below all openings within panels. Run reinforcing continuously from end to end of panels. Lap reinforcing not less than 6 inches whenever it is necessary to use more than one length. NOTE: In corrosive atmospheres, (i.e. saline air, chlorine air, etc.), the use of stainless steel channels, reinforcing and panel anchors should be considered. Do not bridge expansion joints with reinforcing. Install reinforcing as follows:
   1. Place lower half of mortar in bed joint. Do not furrow.
   2. Press panel reinforcing into place.
   3. Cover panel reinforcing with upper half of mortar bed and trowel smooth. Do not furrow.

G. Place full mortar bed for joints not requiring panel reinforcing – do not furrow. Maintain uniform joint width.

H. Set succeeding courses of block. Space at head of panel and jambs must remain free of mortar for caulking with sealant.

I. Use only wooden or rubber tipped tools when tapping glass blocks into place.

J. Strike joints smooth while mortar is still plastic and before final set. Remove surplus mortar from faces of glass blocks and wipe dry. (See Section 3.03). Tool joints smooth and concave before mortar takes final set. (Remove wedges from lower courses of solid glass blocks and point the voids with mortar.) At this time, remove and clean out all excess mortar from jamb, head and other locations.

K. After final mortar set (approximately 24 hours), install packing tightly between glass block panel and jamb and head construction. Leave space for sealing.

L. Apply epoxy sealant evenly to the full depth of recesses as indicated on the drawings and in accordance with the manufacturers application manual and instructions.

M. All exterior glass block panels shall be sealed to prevent water entry

3.3 CLEANING

A. Remove surplus mortar from the faces of the glass block at the time joints are struck or tooled. Mortar should be removed while it is still plastic using a clean, wet sponge or an ordinary household scrub brush with stiff bristles.

B. Do not use harsh cleaners, acids (of any strength), abrasives or alkaline materials while cleaning glass block. Never use a wire brush to remove mortar from glass block surfaces.

C. Final mortar removal is accomplished with a clean, wet sponge or cloth. Rinse sponge or cloth frequently in clean water to remove abrasive particles that could scratch glass surfaces. Allow any remaining film on the block to dry a powder.

D. After all organic sealants, caulking, etc., have been applied, remove excess caulking materials with commercial solvents such as xylene, toluene, mineral spirits or naptha and follow with normal wash and rinse. Be careful not to damage caulking by overgenerous application of strong solvents. Comply with solvent manufacturers directions on label for toxicity and flammability warnings.

E. Final cleaning of glass block panels is accomplished after they are completely installed. Wait until panels are not exposed to direct sunlight. Start at the top of the panel and wash with generous amounts of clean water. Dry all water from the glass block surface. Change cloth frequently to eliminate dried mortar particles or aggregate that could scratch the glass surface. To remove the dry powder from the glass surfaces, use a clean, dry, soft cloth. For stubborn or hard to remove powder or stains, the use of an “extra fine” steel wool (grades 000 or 0000) is suggested. Try this first in an unobtrusive area.

END OF SECTION 042700

SECTION 05 50 00 – METAL FABRICATIONS

PART 1 - GENERAL

1.1 SUMMARY

A. Provide bollards, and similar items as shown and specified.

1.2 REFERENCES

A. ASTM International (ASTM):
1. A 36 - "Specification for Carbon Structural Steel."
2. A 53 - "Specification for Pipe, Steel, Black, and Hot-Dipped, Zinc-Coated Welded and Seamless."
3. A 153 - "Specification for Zinc Coating (Hot-Dip) on Iron and Steel Hardware."
4. A 307 - "Specification for Carbon Steel Bolts and Studs, 60,000 PSI Tensile Strength."
5. A 501 - "Specification for Hot-Formed Welded and Seamless Carbon Steel Structural Tubing."
6. A 1011 - “Specification for Steel, Sheet and Strip, Hot-Rolled, Carbon, Structural, High-Strength Low-Alloy and High-Strength Low-Alloy with Improved Formability.”
7. B 6 - "Specification for Zinc."

B. American Welding Society (AWS).
1. D1.1 - "Structural Welding Code."

C. Federal Specifications (FS).
1. TT-C-490 - "Cleaning Methods for Ferrous Surfaces and Pretreatments for Organic Coatings

D. International Building Code (IBC).

E. The Society for Protective Coatings (SSPC).
1. "Painting Manual."

1.3 SUBMITTALS

A. Shop Drawings for all fabricated items including all connections, field joints, and finishes.

1.4 QUALITY ASSURANCE

A. Regulatory Requirements:
1. Metal Fabrications: Meet applicable requirements of IBC Chapter 22.
2. Handrails and Railings: Meet or exceed applicable requirements of IBC Chapter 10.

PART 2 - PRODUCTS

2.1 MATERIALS

A. Standard Structural Steel Shapes, Bars, and Plates: ASTM A 36.

B. Structural Tubing: ASTM A 501 welded or seamless steel.

C. Architectural and Miscellaneous Steel: ASTM A 53 Type E or S, Grade B galvanized for exterior use.

D. Flat Plates and Sheets: ASTM A 1011, standard mill steel, Grade 30 where 3/16 inch or less thick, otherwise ASTM A 36.

E. Typical Unfinished Bolts, Nuts, and Washers: Low carbon steel standard fasteners, externally and internally threaded, ASTM A 307; malleable washers.

F. Expansion Bolts: Phillips wedge rod anchors, Wej-It, Kwik-bolt. Reverse cone, self-wedging, expansion type. Tightening of nut or increased tension on bolt shank shall act to force wedges outward to create positive increased resistance to withdrawal.

G. Powder actuated Devices: Tempered steel pins with special corrosion resistant finish. Provide guide washers to accurately control penetration. Accomplish fastening by low-velocity piston-driven powder- actuated tool. Pins and tool: Hilti Fastening Systems, Impex Tool Corporation.

H. Welding Electrodes: In accordance with AWS D1.1.

I. Primer: Rust-inhibitive type. Fuller-O'Brien Corporation; The Glidden Company; Sinclair Paint Company; or approved.

J. Zinc for Galvanizing: ASTM B 6.

2.2 FABRICATION

A. Fabricate by firms or shops experienced and skilled in custom fabrication and construction of metal fabrications and miscellaneous metal.
   1. Drill or punch holes, do not use cutting torch. Miter corners and angles of frames unless otherwise noted.
   2. Welding: Shielded electric arc process complying with AWS D1.1.

B. Fabricated Items:
   1. Miscellaneous metal fabricated items are not necessarily individually described. Provide all miscellaneous items not described as required to complete. metal fabrications Work.
   2. Bollards: Standard Weight galvanized steel pipe, nominal 6 inch by 66 inches long, embed bottom 24 inches in concrete and fill core with concrete. Finish top to uniform convex surface.
   3. Miscellaneous Metal: Provide all miscellaneous steel angles, channels, plates and shapes, threaded rods, pipe, bolts, nuts, washers, spacers, and fastenings shown or required to complete the Work.
   4. Galvanize items which will be exposed to weather in the completed Work or as shown.

5. Bolts and screws for attachment of galvanized items shall be galvanized in accordance with ASTM A 153, or of non-corrodible material.
6. Cleaning and Painting: Conform with SSPC for cleaning steel and for application.
7. Prior to application of shop prime coat clean and treat ferrous metal surfaces in accordance with FS TT-C-490 to assure maximum paint adherence.
8. Ferrous metalwork shall be given a shop coat of zinc-chromate rust-inhibitive metal primer or other approved rust-inhibitive metal primer standard with the metalwork manufacturer and compatible with finished coats specified in Section 09 90 00. Apply by spray method.
9. Galvanized metal surfaces shall be given a shop coat of approved galvanized primer standard with manufacturer. Apply by spray method.

PART 3 - EXECUTION

3.1 INSTALLATION

A. Metal fabrications and miscellaneous metalwork shall be installed plumb, true, rigid, and neatly trimmed out, in accordance with Drawings and reviewed shop drawings, by mechanics and workers skilled and experienced in the installation of the type of Work involved.

B. Install metal fabrications and miscellaneous metalwork with all accessories furnished by the fabricator as required for complete and finished installations.

C. Field Painting: After installation, damaged surfaces, field bolts and fasteners, and all welds shall be touched up and spot painted with the same corrosion- inhibitive primer used for shop painting.

END OF SECTION

SECTION 06 10 00 - ROUGH CARPENTRY

PART 1 - GENERAL

1.1 SUMMARY

A. Related Documents
   1. See Structural Notes in drawing set. In case of discrepancy, Structural Notes will govern.

1.2 REFERENCES

A. American Plywood Association (APA).
   1. "Guide to Plywood Grades."

B. ASTM International (ASTM):
   1. A 307 - "Specification for Carbon Steel Bolts and Studs. 60,000 PSI Tensile Strength."
   2. D 3201 - "Test Method for Hygroscopic Properties of Fire-Retardant Wood and Wood-Based Products."
   3. E 497 - "Practice for Installing Sound-Isolating Lightweight Partitions."

C. Federal Specifications (FS).
   1. TT-W-571 - "Wood Preservation: Treating Practices."

D. International Building Code (IBC).

E. United States Product Standard (PS).
   1. PS-1 - "Construction and Industrial Plywood."

F. West Coast Lumber Inspection Bureau (WCLIB).
   1. “Standard Grading Rules for West Coast Lumber No. 16.”

G. Western Wood Products Association (WWPA).
   1. "Grading Rules for Lumber."

H. South Coast Air Quality Management District (SCAQMD)
   1. Rule 1168 – Low / No VOC Adhesives and Caulks
      a. Maximum allowed VOC Levels (G/L) as indicated

VOC Limit Product Type	G/L
Wood Flooring Adhesives	100
Subfloor Adhesives	50
Drywall and Panel Adhesives	50
Multipurpose Construction Adhesives	70
Structural Glazing Adhesives	100
Structural Wood Member Adhesive	140
Architectural Sealants, Including Caulk	250

1.3 QUALITY ASSURANCE

A. Regulatory Requirements: Conform with applicable requirements of IBC Chapter 23 and as noted on Structural Drawings.

B. Certifications:
1. Each piece of lumber shall bear the grade mark of WCLIB or WWPA, and each mill shipment to the site shall be accompanied by a certificate of inspection by WCLIB or WWPA.
2. Each piece of plywood shall be grade stamped in accordance with APA "Guide to Plywood Grades," in conformance with requirements of PS-1.

1.4 SUBMITTALS

A. Show compliance with SCAQMD Rule 1168 Low/No VOC Adhesives and Caulks

B. Show compliance with no added urea formaldehyde (NAUF) for Composite Wood Products.

PART 2 - PRODUCTS

2.1 MATERIALS

A. Sills and all Wood in Contact with Concrete, Masonry, or Earth: Pressure-treated Hem-fir. Wolmanized, CCA Oxide formulation in conformance with Fed. Spec. TT-W-571 for preservative material and for pressure treating.

B. Lumber: Species and Grades in accordance with WCLIB, Standard Grading Rules for West Coast Lumber No. 16, and WWPA, Western Lumber Grading Rules, latest editions as noted on Structural Drawings.

C. Plywood: U.S. Product Standard PS 1, and as noted on Structural Drawings.
1. Roof Sheathing: APA RATED SHEATHING, Exposure 1, T & G edges or panel clips, 3/4 inch thick.
2. Wall Sheathing: APA RATED SHEATHING, Exposure 1, 1/2 inch thick.
3. Subflooring: APA RATED GP Plytanium STURD-I-FLOOR, Exposure 1, 3/4 inch thick, T & G or 2-by blocking under all edge joints. No added urea-formaldehyde resins.

D. Adhesive: APA Specification AFG-01.

E. Rough Hardware: Hot-dipped galvanize exterior hardware.
1. Nails: Common wire galvanized, at exposed locations, coated sinkers or galvanized box at concealed locations.
2. Screws: Self-drilling, self-tapping, corrosion resistant, Phillips wafer head.
3. Powder actuated Devices: Tempered steel pins with special corrosion resistant finish. Provide guide washers to accurately control penetration. Accomplish fastening by low-velocity piston-driven powder-actuated tool. Pins and Tool: Hilti Fastening Systems, Impex Tool Corporation.

4. Expansion Bolts: Phillips wedge rod anchors, Wej-It, Kwik-bolt. Reverse cone, self-wedging, expansion type. Tightening of nut or increased tension on bolt shank shall act to force wedges outward to create positive increased resistance to withdrawal.
5. Bolts, Nuts, and Washers: ASTM A 307, galvanized, Hex head. Provide standard cut washers at all bolt heads and nuts bearing on wood or concrete.
6. Metal Timber Framing Connectors: Simpson Company "Strong Tie"; Silver; or approved; types as shown. Fabricate from hot-dipped galvanized steel, 16 gage material minimum, 1/8 inch plate where welded, unless otherwise shown or specified, punched for nailing. Provide full nailing or bolting in accordance with manufacturer's recommendations. Provide a nail for each punched hole.
7. Holdowns: Earthbound Corporation, Continuous Threaded Rod Holdown System for Wood Shrinkage; or approved.
8. Miscellaneous Hardware: Provide all common screws, bolts, fastenings, washers, and nuts required to complete rough carpentry Work.

F. Preservative Treatment: Preservative solution shall conform with requirements of FS TT-W-571. Acceptable products include Willard Products Penta-Treat "300".

G. Fire Retardant Treatment: Conform with requirements of AWPA C-20 and C-27, Type A, when tested in accordance with ASTM D 3201. Acceptable products include Hickson Corporation, DRICON, or approved.

2.2 FABRICATION

A. Lumber:
1. 2X and 3X: Air- or kiln-dry to maximum 19 percent moisture content at time of surfacing.
2. Furnish surfaced four sides, S4S, unless otherwise specified.
3. Size in accordance with rules of governing standard. Sizes shown are nominal unless otherwise specified.

PART 3 - EXECUTION

3.1 INSTALLATION

A. Coordination:
1. Prior to bidding, contact local regulatory authorities having jurisdiction to identify, and comply with, any special framing, blocking or backing details, or caulking conditions as may be required for structural or fire stopping, or energy code requirements.
2. Coordinate with Work of other Sections to ensure that all fixtures, devices, switches, outlets, ducts, pipes, and similar items can be installed as shown without modifications to framing. Provide all blockouts, raceways and similar framing as required.

B. General: Fit accurately. Secure rigidly, to lines and levels shown, plumb and square to a tolerance of 1/8 inch in 10 feet. Provide any special framing, even if not specifically shown, as required to properly complete Work.

C. Blocking:
1. Provide all wood blocking, backing, furring, grounds, nailers, stripping, and similar rough carpentry as detailed and as otherwise required to anchor fixtures and equipment to be installed by other trades. Perform all cutting, boring and similar Work.
2. Provide continuous 16” wide, 16 gauge metal strapping for all wall mounted or wall supported items and accessories. Confirm locations with Owner or Architect prior to application of covering materials.
3. Provide additional studs or blocking as required to assure solid end and edge nailing for all siding and facias.
4. Provide additional blocking as required for edge nailing of all soffit materials at all soffits and overhangs.
5. Provide blocking or bracing as required to make interior walls rigid.

D. Framing: Provide as specified unless otherwise noted on Structural Drawings.
1. At bottom plate to concrete, provide 5/8 inch diameter anchor bolts, minimum embedment 7 inches, at 4 feet on center and within 12 inches of board ends. Provide fiberglass sill sealer under bottom plate of all exterior walls.
2. Remove all wood used in forming and placing concrete if within the ground or between foundation sills and ground. Remove all loose or casual wood in contact with the ground from under the building.
3. Studs, Joists, Beams, and Posts: Install all members true to line. Shims shall be seasoned, dried, and same Grade (minimum) as members connected. Place joists with crown up; maximum 1/4 inch crown permitted.
4. Support all columns and posts located on concrete or masonry floors, plinths exposed to weather or water splash, or in basements, by concrete piers or metal pedestals projecting above floors unless approved pressure preservative treated wood or foundation grade redwood is used. Pedestals shall project a minimum 6 inches above exposed earth and 1 inch above floors. Individual concrete or masonry piers shall project a minimum 8 inches above exposed earth unless the column or post they support are of approved wood specified.
5. Maintain minimum 6 inch clearance between any wood and earth, or provide approved wood as specified.
6. Provide positive connection between post support and post, and between post and beam sufficient to ensure against uplift and lateral displacement.
7. Joists shall bear not less than 1-1/2 inch on wood or metal, and 3 inches on masonry.
8. Support all joists laterally at ends and over supports with 2 inch wide by full joist depth solid blocking, rim joist, joist hanger, or other approved means.
9. Notches at ends of joists shall not exceed 1/4 joist depth. Notches in top or bottom of joists shall not exceed 1/6 joist depth, and are not permitted in middle third of span.
10. Lap joists framing from opposite sides of beams, girders, or partitions 4 inch minimum or tie opposing joists together in an approved manner.
11. Support joists framing into sides of wood girders by framing anchors.
12. Double all trimmers and headers framing openings or provide lumber of equivalent cross section. Support each end with proper sized framing anchors unless adequate bearing is provided through other means. Support tail joists with proper sized framing anchors.
13. Provide double top plate, overlap at corners and intersections with all partitions. Offset end joints 4 feet minimum.

14. All studs shall have full bearing on a plate or sill not less than 2 inches in thickness, and having a width not less than that of stud.
15. Effectively brace all exterior and main cross stud partitions, by an approved method, at each end or as near thereto as possible, and at a maximum 25 feet of length.
16. Provide all openings in bearing walls with minimum 4 x 10 Douglas fir No. 2 header, with minimum bearing of 1-1/2 inches for full width unless noted otherwise on Structural Drawings.
17. Provide fire stopping, of non-combustible material or 2 inch nominal wood members, to cut off concealed openings (both vertical and horizontal), to form an effective barrier between floors, between top story and roof or attic space, and as follows:
    a. In concealed spaces between stair stringers at top and bottom of run.
    b. Between studs along and in line with run of stairs.
    c. Around vent pipes, ducts, and similar penetrations at ceiling and floor levels which afford a passage for fire.
18. Provide metal nail plates in all locations where plumbing or wiring comes within 1-1/4 inch of the edge of any stud.
19. Frame stud partitions containing plumbing, heating, or other pipes, and space joists underneath to provide proper clearance. Where a partition containing such piping runs parallel to joists double, space, and bridge joists to permit passage of piping. Where such piping is placed in or partly in a partition requiring cutting of soles or plates provide metal ties minimum 1/8 inch thick and 1-1/2 inch wide. Fasten across and to each side of opening with not less than 4 - 16d nails.
20. Unless noted otherwise on Structural Drawings: Studs in exterior or interior partitions may be cut or notched for up to 25 percent of stud width. Studs may have a hole bored up to 40 percent of stud width, provided the hole is no closer than 5/8 inch from edge of stud. Bored holes shall not be located at same section of stud as a cut or notch.
21. Lumber, Plywood, and Particleboard: Comply with applicable standards and grading rules of appropriate Association, and identified by Grade mark of approved inspection agency.

E. Nailing: Conform to IBC Table 2304.9.1 for all nailing unless otherwise noted on Structural Drawings.
    1. Staples or other power driven fasteners, with equivalent capacity of fasteners shown or specified, may be substituted only with prior written approval of Building Official and Architect.

F. Plywood Subflooring:
    1. Provide T & G or 2x blocking under all edge joints. Lay up with face grain perpendicular to supports, with panel continuous over two or more spans, end joints over framing, and end laps staggered.
    2. Install with adhesive and ring-shank nails to prevent squeaking. Nail with 8d at 6 inches on center to framed panel edges and at 10 inches on center to intermediate supports.

G. Plywood Roof Sheathing:
    1. Lay up with face grain perpendicular to supports, with panel continuous over two or more spans, end joints over framing, and end laps staggered.

2. Provide edge support by use of panel clips, T & G edges or solid blocking. Allow 1/8 inch spacing at panel ends and edges.
3. Nail with 8d at 6 inches on center to panel edges and at 12 inches on center to intermediate supports unless noted otherwise on Structural Drawings.

H. Plywood Wall Sheathing:
1. Lay up with face grain perpendicular to supports, with panel continuous over two or more spans, end joints over framing, and end laps staggered.
2. Nail with 8d at 6 inches on center to panel edges and at 12 inches on center to intermediate supports unless noted otherwise on Structural Drawings.

I. Coat all wood members in contact with concrete with two flowing brush coats of preservative treatment. Extend coating on members a minimum of 2 feet from face of concrete. Coat members prior to installation. Perform all cutting prior to treating.

J. Framing for Sound-Retardant Partitions: Comply with applicable requirements of ASTM E 497.

END OF SECTION

SECTION 06 17 33 - WOOD I JOISTS

PART 1 - GENERAL

1.1 RELATED DOCUMENTS

A. See Structural Notes in drawing set. In case of discrepancy, Structural Notes will govern.

1.2 REFERENCES

A. American Plywood Association (APA).

B. International Building Code (IBC).

C. United States Product Standard (PS).
   1. PS-1 - "Construction and Industrial Plywood."

1.3 SUBMITTALS

A. Shop Drawings: Show layout and detail necessary for determining fit and placement in the building. Show all blocking, bracing and bearing details.

B. Design Data:
   1. Complete calculations stamped by a professional engineer registered in the State of Washington.

1.4 QUALITY ASSURANCE

A. Qualifications: Manufacturers shall have a minimum of 5 years experience in the manufacture of joists for commercial projects.

B. Regulatory Requirements:
   1. Comply with applicable requirements of IBC Chapter 23 and as noted on Structural Drawings.

1.5 DELIVERY, STORAGE, AND HANDLING

A. Store joists in a vertical position and protected from weather.

PART 2 - PRODUCTS

2.1 MATERIALS

A. Wood I Joists: Boise Cascade Corporation, Georgia-Pacific Corporation, Trus Joist MacMillan, pre-engineered I joists as shown and loading requirements.
   1. Flanges: Laminated veneer lumber, kiln dried to moisture content between 7 and 16 percent.

2. Webs: Plywood complying with PS-1 or oriented strand board complying with APA and joist manufacturer's applicable standards.

2.2 FABRICATION

A. Manufacture in a plant approved for fabrication by building code.

B. Accurately cut and fabricate all wood members to provide good bearing and so that all joist units are uniform.

C. Camber to 2250 foot radius or as directed.

PART 3 - EXECUTION

3.1 ERECTION AND INSTALLATION

A. Handle joists with care in erection to avoid damage to joists or construction in place.

B. Securely brace during erection and after permanent installation in accordance with manufacturer's recommendations.

C. Erection bracing shall hold joists straight, plumb, and in safe condition until sheathing and permanent bracing has been fastened forming a structurally sound floor or roof framing system.

D. Install all erection and permanent bracing and permanently fasten all joists before application of any loads.

END OF SECTION

SECTION 06 17 53 – SHOP FABRICATED WOOD TRUSSES

PART 1 - GENERAL

1.1 RELATED DOCUMENTS

A. See Structural Notes in drawing set. In case of discrepancy, Structural Notes will govern.

1.2 REFERENCES

A. ASTM International (ASTM):
   1. A 653 - "Specification for Steel Sheet, Zinc-Coated (Galvanized) or Zinc-Iron Alloy-Coated (Galvannealed) by the Hot-Dip Process."
   2. A 924 - "Specification for General Requirements for Steel Sheet, Metallic-Coated by the Hot-Dip Process."

B. International Building Code (IBC).

C. National Forest Products Association (NFPA).
   1. "National Design Specification for Wood Construction."

D. Truss Plate Institute (TPI).
   1. "Design Specification for Metal Plate Connected Wood Trusses."

1.3 SYSTEM DESCRIPTION

A. Design Requirements: Comply with NFPA and TPI Specifications."

1.4 SUBMITTALS

A. Shop Drawings: Show layout and detail necessary for determining fit and placement in the building. Show all blocking, bracing and bearing details.

B. Design Data:
   1. Complete calculations stamped by a professional engineer registered in the State of Washington.
   2. Certified load test results and ICBO report.

1.5 QUALITY ASSURANCE

A. Qualifications: Manufacturers shall have a minimum of 5 years experience in the manufacture of trusses for commercial projects.

B. Regulatory Requirements:
   1. Comply with applicable requirements of IBC Chapter 23 and as noted on Structural Drawings.
   2. Trusses shall have ICBO approval for one hour fire rating using 5/8 inch Type X gypsum board.

PART 2 - MATERIALS

2.1 MANUFACTURERS

A. The Truss Company, Sumner, WA; Puget Sound Truss, Kenmore, WA; Roof Truss Supply, Woodinville, WA; BMC, Everett, WA.

2.2 MATERIALS

A. Lumber: Kiln dried and of stress grade to meet span and loading requirements.

B. Connector Plates: Minimum 0.036 inch thick steel conforming to ASTM A 653 Type B. Hot dip galvanized in conformance with ASTM A 924.

2.3 FABRICATION

A. Manufacture in a plant approved for fabrication by building code.

B. Accurately cut and fabricate all wood members to provide good bearing and so that all truss units are uniform.

C. Apply connector plates to both faces of trusses at each joint. Provide firm, even contact between plates and wood.

D. Lumber defects such as wane or knots occurring in the connector plate area shall not affect more than 10 percent of required plate area or number of effective teeth required for each truss member.

PART 3 - EXECUTION

3.1 ERECTION AND INSTALLATION

A. Handle trusses with care in erection to avoid damage to trusses or construction in place.

B. Securely brace during erection and after permanent installation in accordance with TPI "Bracing Wood Trusses: Commentary and Recommendations."

C. Erection bracing shall hold trusses straight, plumb, and in safe condition until sheathing and permanent truss bracing has been fastened forming a structurally sound floor or roof framing system.

D. Install all erection and permanent bracing and permanently fasten all trusses before application of any loads.

END OF SECTION

SECTION 06 18 00 - GLUED-LAMINATED CONSTRUCTION

PART 1 - GENERAL

1.1 SUMMARY

A. Section includes framing using structural glued-laminated timber.

B. Related Documents

1. See Structural Notes in drawing set. In case of discrepancy, Structural Notes will govern.

1.2 ACTION SUBMITTALS

A. Product Data: For each type of product.

1.3 INFORMATIONAL SUBMITTALS

A. Certificates of Conformance: Issued by a qualified testing and inspecting agency indicating that structural glued-laminated timber complies with requirements in AITC A190.1.

1.4 QUALITY ASSURANCE

A. Manufacturer Qualifications: An AITC- or APA-EWS-licensed firm.

1.5 DELIVERY, STORAGE, AND HANDLING

A. General: Comply with provisions in AITC 111.

B. Individually wrap members using plastic-coated paper covering with water-resistant seams.

PART 2 - PRODUCTS

2.1 MANUFACTURERS

A. See Structural Notes on Drawings.

2.2 STRUCTURAL GLUED-LAMINATED TIMBER

A. General: Provide structural glued-laminated timber that complies with AITC A190.1 and AITC 117 or research/evaluation reports acceptable to authorities having jurisdiction.

1. Factory mark each piece of structural glued-laminated timber with AITC Quality Mark or APA-EWS trademark. Place mark on surfaces that are not exposed in the completed Work.
2. Provide structural glued-laminated timber made with wet-use adhesive complying with AITC A190.1.
3. Adhesives: Do not use adhesives that contain urea formaldehyde.
4. Adhesives: Use adhesives that meet the testing and product requirements of the California Department of Public Health's "Standard Method for the Testing and Evaluation of Volatile Organic Chemical Emissions from Indoor Sources Using Environmental Chambers."

B. Species and Grades for Structural Glued-Laminated Timber: Douglas fir-larch that complies with Structural Notes.

C. Species and Grades for Beams and Purlins:

1. Species and Beam Stress Classification: Douglas fir-larch, 24F-1.8E.
2. Lay-up: Balanced.

D. Species and Grades for Columns and Truss Members:

1. Species and Combination Symbol: Douglas fir-larch, 24F-V8.

E. Appearance Grade: Architectural, complying with AITC 110.

2.3 TIMBER CONNECTORS

A. As shown on Drawings and Structural Notes.

B. Materials: Unless otherwise indicated, fabricate from the following materials:

1. Structural-steel shapes, plates, and flat bars complying with ASTM A 36/A 36M.
2. Round steel bars complying with ASTM A 575, Grade M 1020.
3. Hot-rolled steel sheet complying with ASTM A 1011/A 1011M, Structural Steel, Type SS, Grade 33.

C. Finish steel assemblies and fasteners with rust-inhibitive primer, 2-mil dry film thickness.

D. Hot-dip galvanize steel assemblies and fasteners after fabrication to comply with ASTM A 123/A 123M or ASTM A 153/A 153M.

2.4 MISCELLANEOUS MATERIALS

A. End Sealer: Manufacturer's standard, transparent, colorless wood sealer that is effective in retarding the transmission of moisture at cross-grain cuts and is compatible with indicated finish.

B. Penetrating Sealer: Manufacturer's standard, transparent, penetrating wood sealer that is compatible with indicated finish.

2.5 FABRICATION

A. Shop fabricate for connections to greatest extent possible, including cutting to length and drilling bolt holes.

B. Camber: Fabricate horizontal and inclined members of less than 1:1 slope with either circular or parabolic camber equal to 1/500 of span.

C. End-Cut Sealing: Immediately after end cutting each member to final length, apply a saturation coat of end sealer to ends and other cross-cut surfaces, keeping surfaces flood coated for not less than 10 minutes.

D. Seal Coat: After fabricating, sanding, and end-coat sealing, apply a heavy saturation coat of penetrating sealer on surfaces of each unit.

PART 3 - EXECUTION

3.1 INSTALLATION

A. General: Erect structural glued-laminated timber true and plumb and with uniform, close-fitting joints. Provide temporary bracing to maintain lines and levels until permanent supporting members are in place.

1. Handle and temporarily support glued-laminated timber to prevent surface damage, compression, and other effects that might interfere with indicated finish.

B. Cutting: Avoid extra cutting after fabrication. Where field fitting is unavoidable, comply with requirements for shop fabrication.

C. Fit structural glued-laminated timber by cutting and restoring exposed surfaces to match specified surfacing.

1. Predrill for fasteners using timber connectors as templates.
2. Finish exposed surfaces to remove planing or surfacing marks.
3. Coat cross cuts with end sealer.

3.2 ADJUSTING

A. Repair damaged surfaces after completing erection. Replace damaged structural glued-laminated timber if repairs are not approved by Architect.

3.3 PROTECTION

A. Do not remove wrappings on individually wrapped members until they no longer serve a useful purpose, including protection from weather, sunlight, soiling, and damage from work of other trades.

1. Slit underside of wrapping to prevent accumulation of moisture inside the wrapping.

END OF SECTION 06 18 00

SECTION 06 20 00 – FINISH CARPENTRY

PART 1 - GENERAL

1.1 RELATED SECTIONS

A. Section 07 46 46 Mineral-Fiber Cement Siding.

1.2 REFERENCES

A. American Plywood Association (APA).

B. Architectural Woodwork Institute (AWI).

C. United States Product Standard (PS).
   1. PS-1 - "Construction and Industrial Plywood."

D. South Coast Air Quality Management District (SCAQMD)
   1. Rule 1168 – Low / No VOC Adhesives and Caulks
      a. Maximum allowed VOC Levels (G/L) as indicated

VOC Limit Product Type	G/L
Wood Flooring Adhesives	100
Rubber Flooring Adhesives	60
Subfloor Adhesives	50
Drywall and Panel Adhesives	50
Cove Base Adhesives	50
Multipurpose Construction Adhesives	70
Structural Glazing Adhesives	100
Structural Wood Member Adhesive	140
Architectural Sealants, Including Caulk	250

1.3 SUBMITTALS

A. Shop Drawings: Show materials, methods of fabrication, and details of installation.

B. Samples: Furnish required samples with finishes specified.

C. Proof of compliance with ESDS 6.2 Low/No VOC adhesives and Sealants and 7.1 Composite Wood Products that contain Emit Low / No Formaldehyde (NAUF).

1.4 QUALITY ASSURANCE

A. Qualifications: Provide finish carpentry Work in accordance with AWI "Quality Standards," in the grades specified.

B. Show compliance with SCAQMD Rule 1168 Low/No VOC Adhesives and Caulks

C. Show compliance with no added urea formaldehyde (NAUF) for Composite Wood Products.

PART 2 - PRODUCTS

2.1 MATERIALS

B. Trim:
1. Exterior: Tight Knot Western Red Cedar, Paint Grade, Sizes as indicated.
2. Interior: Western Hemlock, or finger jointed primed, paint grade, sizes as indicated.

B. Telephone Terminal Board: Douglas fir BC Grade interior plywood, 3/4 inch thick, size as shown. Edge band with 1/2 inch hardwood on exposed edges.

C. Window Sills: Plastic laminate over exterior plywood substrate.

D. Corner Guards: InPro Corp or approved equal. Clear 1 1/8” x 1 1/8” x .075”. 4’ lengths with fasteners

E. Folding Attic Access Ladder
1. Werner, WernerCo, Greenville, PA, FAKRO, FAKRO America, LLC, Addision, IL
2. Pull Down Folding or Telescoping Ladder with integral access hatch, hardware, and frame as a complete system.
3. 250 LF Minimum Capacity, size as indicated.

F. Fasteners:
1. As shown, specified, and as required to securely install materials.
2. Size of fasteners for siding and paneling shall be as recommended by manufacturer.

G. Joint Sealant: As specified in Section 07 92 00.

2.2 FABRICATION

A. Conform with AWI "Quality Standards," Section 300, Custom Grade requirements as applicable. Standard wood moldings shall conform with Western Wood Product Association WP Series, where applicable.

B. Common Area Vanities, and Kitchen Counters as shown: Plastic laminate with plastic laminate edge and minimum 4” backsplash. Color and pattern as selected. Fabricate with plastic laminate backing sheet.
1. Wall Mounted Brackets: Knape & Vogt #208 WH 550 22" Heavy Duty L brackets.
2. Use NAUF exterior grade plywood at all sink locations.
3. Coordinate with 12 30 00 for all other Countertops.

C. Hall Wall Paneling: Plastic Laminate over plywood per drawings. Color: TBD.

PART 3 - EXECUTION

3.1 INSTALLATION

A. Install all millwork in accordance with reviewed Shop Drawings and AWI "Quality Standards."

B. Cope internal corners and miter external corners at all standing and running trim.

C. Provide running trim in as long lengths as practical. Make splices with 45 degree butt joints.

D. Install materials straight and true. Leave 1/8 inch space between ends of exterior trim, seal joint. Tightly butt ends of interior trim.

E. In exterior Work drive nail heads flush with surface of siding and trim. Maintain nailing pattern in straight horizontal lines.

F. In interior Work countersink nails and fill nail holes.

G. Machine sand trim and finish with hand sanding. Leave free from machine or tool marks that will show through finishes specified. Ease all edges of trim.

H. Install all finish hardware, accurately fit, securely apply, and carefully adjust to provide smooth and proper operation of all hardware.

I. Miscellaneous Items: Install all items shown and specified, which are not called for to be installed under other Sections, to plumb, true, and level lines and positions. Install in accordance with details, manufacturer's printed instructions and additional requirements specified. Provide connections and miscellaneous items required to make Work of this Section complete. Securely fasten wall and ceiling mounted items to solid backing or blocking.

3.2 CLEANING

A. Remove dirt and other foreign matter from installed materials.

B. Upon completion of installation, leave materials clean and ready for finishing.

END OF SECTION

SECTION 07 11 13 – BITUMINOUS DAMPPROOFING

PART 1 - GENERAL

1.1 SUMMARY

A. Provide bituminous dampproofing to below grade foundation walls.

1.2 SUBMITTALS

A. Product Data: Manufacturer's material specifications and recommended installation instructions for application over substrates on Project.

1.3 DELIVERY, STORAGE, AND HANDLING

A. Deliver materials in original packaging, with labels intact and legible.

B. Store materials protected from damage and between temperature limits recommended by manufacturer.

PART 2 - PRODUCTS

2.1 MATERIALS

A. Dampproofing: Atco #1931 Roof Primer (2 coats), Karnak Corporation, Karnak 100 Non-Fibrated Emulsion Coating, or approved.

PART 3 - EXECUTION

3.1 EXAMINATION

A. Verify that surfaces to receive dampproofing are free from dirt and debris, that voids and cracks are filled and that ridges and fins are removed leaving a smooth, firm surface.

B. Verify that concrete has cured the minimum period recommended by dampproofing materials manufacturer.

3.2 APPLICATION

A. Apply uniform coating of dampproofing material by brush or spray, flowing the material on the surface to obtain a smooth and uniform film at the rate of not less than 2 to 3 gallons per 100 square feet.

3.3 CLEANING

A. Clean material from adjacent surfaces and any surfaces exposed to view.

END OF SECTION

SECTION 07 19 00 – WATER REPELLENTS

PART 1 - GENERAL

1.1 SUMMARY

A. Section Includes:

1. Clear water repellent sealer and coating applied to exterior concrete surfaces.

B. Related Sections

1. Section 04 21 13 – Brick Masonry

PART 2 - PRODUCTS

2.1 MANUFACTURERS

A. Silane/Siloxane Water Repellents:
1. BASF Construction Chemicals: www.buildingsystems.basf.com
2. Evonik (Degussa Corporation) Chemtrete: www.protectosil.com
3. PROSOCO, INC: www.prosoco.com
4. Other manufacturers as approved.
   a. Acceptance of other manufacturers/products is based upon results of mock-up testing including visual appearance and RILEM Tube Test results, final verification on site prior to installation and meeting the specified warranty requirements, as accepted by Architect/Owner.

2.2 MATERIALS

A. Exact products to be used will be determine by side-by-side mock-up testing of at least 3 products meeting specified requirements; prepare mockups as specified above; submit cost breakdown for each product used in mock-up, including both unit and total costs.

PART 3 - EXECUTION

3.1 APPLICATION

A. Apply water repellent in accordance with manufacturer's instructions, using procedures and application methods recommended as producing the best results.

B. Apply at rate recommended by manufacturer, continuously over entire surface.

C. Application Surfaces:
   1. Exposed Exterior Above Grade Unpainted Concrete Walls: Apply water repellent sealer systems as follow:
      a. Water repellent sealers: Apply on all exterior surfaces.
   2. Above Grade Paving Areas Over Building Spaces: Apply water-repellent sealer.
   3. All locations of Masonry Veneer Installation: Apply water repellent sealer.

D. Do not exceed coverage rates or build-up in application thickness that may result in lack of uniformity in hue, sheen, or light reflectance from surface.
   1. Limit run-down over dried coating surfaces below application.
   2. Do not overlap new application over adjacent application.

E. Remove Water repellent from unintended surfaces immediately by a method instructed by water repellent manufacturer.

END OF SECTION

SECTION 07 21 00 - BUILDING INSULATION

PART 1 - GENERAL

1.1 SUMMARY

A. Section Includes:

1. Glass-fiber blanket insulation.
2. Mineral-wool blanket insulation.
3. Rigid insulation (other than roof).
4. Closed cell spray foam insulation (at difficult reach/seal locations).

B. Related Sections

1. Section 07 50 00 Thermoplastic Roofing System

1.2 REFERENCES

A. ASTM C 423 - Standard Test Method for Sound Absorption and Sound Absorption Coefficients by the Reverberation Room Method; 2000.

B. ASTM C 518 - Standard Test Method for Steady-State Thermal Transmission Properties by Means of the Heat Flow Meter Apparatus; 1998.

C. ASTM C 612 - Standard Specification for Mineral Fiber Block and Board Thermal Insulation; 2000a.

D. ASTM C 665 - Standard Specification for Mineral-Fiber Blanket Thermal Insulation for Light Frame Construction and Manufactured Housing; 1998.

E. ASTM E 84 - Standard Test Method for Surface Burning Characteristics of Building Materials; 2000a.

F. NAIMA - Recommendations for Installation in Residential and Other Light-Frame Construction - Fiber Glass Building Insulation; North American Insulation Manufacturers Association; 1999.

1.3 QUALITY ASSURANCE

A. Regulatory Requirements: International Building Code, WSEC/

1.4 SUBMITTALS

A. Product Data: For each type of product indicated.

B. Product test reports.

C. Research/evaluation reports.

PART 2 - PRODUCTS

2.1 GLASS-FIBER BLANKET INSULATION

A. Manufacturers: Subject to compliance with requirements, provide products by one of the following or approved equal:

1. Knauf Insulation.
2. Owens Corning.
3. CertainTeed Corporation.

B. Unfaced, Glass-Fiber Blanket Insulation: ASTM C 665, Type I; with maximum flame-spread and smoke-developed indexes of 25 and 50, respectively, per ASTM E 84; passing ASTM E 136 for combustion characteristics.

C. Sound Attenuating Insulation: friction-fit fiberglass batt, Type 1, Owens-Corning Sonicbatt or equal. Seal all noise shortcuts: back to back j boxes, above ceiling plane, and sealants around door and relite openings.

D. Thermal Performance:

1. R-21 at exterior walls
2. R-49 at ceilings
3. R-13 at interior walls

2.2 MINERAL-WOOL BLANKET INSULATION

A. Manufacturers: Subject to compliance with requirements, provide products by one of the following or approved equal:

1. Fibrex Insulations Inc.
2. Owens Corning.
3. Roxul Inc.
4. Thermafiber.

B. Unfaced, Mineral-Wool Blanket Insulation: ASTM C 665, Type I (blankets without membrane facing); consisting of fibers; with maximum flame-spread and smoke-developed indexes of 25 and 50, respectively, per ASTM E 84; passing ASTM E 136 for combustion characteristics.

C. Thermal Performance: R-21.

2.3 EXTRUDED POLYSTYRENE FOAM PLASTIC BOARD INSULATION

A. Manufacturers: Owens Corning or approved equal.

B. Materials
   1. Extruded Polystyrene Board, Type IV ASTM C 578, Type IV, 25-psi minimum compressive strength at vertical wall conditions and Type V 100 PSI at vertical or underslab horizontal conditions; unfaced; maximum flame-spread and smoke-developed indexes of 25 and 450, respectively, per ASTM E 84.

C. Thermal Performance: R-30.

2.4 CLOSED-CELL POLYURETHANE FOAM INSULATION

A. Low pressure, low expansion, single component polyurethane foam, with maximum flame-spread and smoke-developed indexes of 15 and 25, respectively, per ASTM E 84.

   1. Basis-of-Design Product: DuPont Safety & Construction: E. I. du Pont de Nemours and Company; DuPont™ Window & Door Foam.
   2. Pressure Build-Up: 0.0247 psi (0.170 kPa) maximum, AAMA 812.
   3. Deflection: 0.0050 inch (0.127 mm) maximum, AAMA 812.

2.5 POLYISOCYANURATE BOARD INSULATION

A. Polyisocyanurate ISO: Rigid board with fiber reinforced facers on both sides, meeting or exceeding the requirements of ASTM C 1289. Carlisle SecurShield Polyiso.

   1. Compressive Strength: 20 psi (138 kPa).
   2. Density: 2 lb per cubic foot (24 kg/cu m) minimum.
   3. R-Value: R-38.

B. Tapered Insulation: Provide factory-tapered insulation boards fabricated to slope of 1/4 inch per 12 inches, unless otherwise indicated.

C. Provide preformed saddles, crickets, tapered edge strips, and other insulation shapes where indicated for sloping to drain. Fabricate to slopes indicated.

D. Fasteners: Factory-coated steel fasteners and metal or plastic plates meeting corrosion-resistance provisions in FMG 4470, designed for fastening roof insulation to substrate, and acceptable to roofing system manufacturer.

E. Gypsum Cover Board: ASTM C1177; glass-mat; water resistant gypsum substrate; ½ inch thick; “Dens-Deck Prime” by Georgia-Pacific Corporation, Securock, or equivalent.

F. Insulation and Cover Board Adhesive: As recommended by the manufacturer for the application; FM approved.

G. Walkways: Provide non skid, contrasting color walkpads in areas of heavy traffic around mechanical equipment and from point of roof access location

PART 3 - EXECUTION

3.1 INSTALLATION, GENERAL

A. Comply with insulation manufacturer's written instructions applicable to products and applications indicated.

B. Install insulation that is undamaged, dry, and unsoiled and that has not been left exposed to ice, rain, or snow at any time.

C. Extend insulation to envelop entire area to be insulated. Cut and fit tightly around obstructions and fill voids with insulation. Remove projections that interfere with placement.

D. Provide sizes to fit applications indicated and selected from manufacturer's standard thicknesses, widths, and lengths. Apply single layer of insulation units to produce thickness indicated unless multiple layers are otherwise shown or required to make up total thickness.

3.2 INSTALLATION OF BLANKET INSULATION

A. Install in cavities formed by framing members according to the following requirements:

1. Use insulation widths and lengths that fill the cavities formed by framing members. If more than one length is required to fill the cavities, provide lengths that will produce a snug fit between ends.
2. Place insulation in cavities formed by framing members to produce a friction fit between edges of insulation and adjoining framing members.
3. Maintain 3-inch (76-mm) clearance of insulation around recessed lighting fixtures not rated for or protected from contact with insulation.
4. For metal-framed wall cavities where cavity heights exceed 96 inches (2438 mm), support unfaced blankets mechanically and support faced blankets by taping flanges of insulation to flanges of metal studs.

3.3 INSTALLATION OF SLAB INSULATION

A. On vertical slab edge and foundation surfaces, set insulation units suing manufacturer’s recommended adhesive according to manufacturer’s written instructions.

1. If not otherwise indicated, extend insulation a minimum of 24 inches below exterior grade line with 45 degree cut top edge of insulation board at slab interface.

B. On horizontal surfaces, loosely lay insulation units according to manufacturer's written instructions. Stagger end joints and tightly abut insulation units.

3.4 INSTALLATION OF CLOSED CELL SPRAY FOAM INSULATION

A. Utilize foam insulation at difficult wall to roof and wall to slab/blocking conditions for continuity of tight sealing of air membrane.

END OF SECTION 07 21 00

SECTION 07 25 00 - WEATHER BARRIERS

PART 1 - GENERAL

1.1 SUMMARY

A. Section Includes:

1. Commercial weather barrier assemblies.
2. Flexible flashing.
3. Weather barrier flashing.
4. Fluid-applied flashing.
5. Weather barrier accessories.
6. Drainage material.

B. Related Requirements:

1. Section 04 21 13 Brick Masonry
2. Section 07 46 46 Mineral Fiber Cement Siding
3. Section 09 24 00 Cement Plastering

1.2 DEFINITIONS

A. Weather Barrier: A combination of materials and accessories that do the following:

1. Prevents the accumulation of water as a water-resistive barrier.
2. Minimizes the air leakage into or out of the building envelope as a continuous air barrier.
3. Provides sufficient water vapor transmission to enable drying as a vapor-permeable membrane.

B. Water-Resistive Barrier: A combination of materials and accessories that prevent the accumulation of water within the wall assembly per International Building Code Section 1403.2.

C. Continuous Air Barrier: The combination of interconnected materials, assemblies, and sealed joints and components of the building envelope that minimize air leakage into or out of the building envelope per ASHRAE 90.1 section 5.4.3.1.

D. Vapor Diffusion: A slow movement of individual water vapor molecules from regions of higher to lower water vapor concentration (higher to lower vapor pressure).

E. Vapor Permeable Membrane: The property of having a water-vapor permeance rating of 10 perms or greater, when tested in accordance with the desiccant method using Procedure A of ASTM E 96 per definition in International Building Code. Vapor permeable material permits the passage of moisture vapor through vapor diffusion.

1.3 PREINSTALLATION MEETINGS

A. Preinstallation Conference: Conduct conference at Project site.

1. Meet with Owner, Architect, Manufacturer's Certified Installer, weather barrier manufacturer's designated field representative, and installers of work that interfaces with or affects weather barrier.
2. Review methods and procedures related to weather barrier installation, including manufacturer's written instructions.
3. Review and finalize construction, and verify availability of materials, Installer's personnel, equipment, and facilities needed to make progress and avoid delays.
4. Examine substrate conditions and finishes for compliance with requirements.
5. Review flashings, special weather barrier details, weather barrier penetrations, and condition of other construction that affects weather barrier.
6. Review weather barrier manufacturer's Project Registration and Observation process.
7. Review Construction Indoor Air Quality Management Plan "Moisture Protection for Absorbent Materials."
8. Review temporary protection requirements for weather barrier during and after installation.

1.4 SUBMITTALS

A. Product Data: For each type of product.

1. For weather barrier, include data on air and water-vapor permeance based on testing in accordance with referenced standards.

B. Shop Drawings: Show details of weather barrier at terminations, openings, and penetrations. Show details of flexible flashing applications.

C. Manufacturer's Instructions: For installation of each product specified.

D. Qualification Data: For Installer.

E. Sample Warranty: For manufacturer's warranty.

F. Reports: Field test and inspection reports.

G. Installer's weather barrier manufacturer-training certificate.

1.5 QUALITY ASSURANCE

A. Installer Qualifications: A qualified firm that is certified by weather barrier system manufacturer to install manufacturer's product.

B. Mockups: Build mockups to set quality standards for materials and execution.

1. Use portion of actual exterior wall assembly 16-20, incorporating backup wall construction, external cladding, window, storefront, door frame and sill,

insulation, ties and other penetrations, and flashing to demonstrate surface preparation, crack and joint treatment, application of weather barriers, and sealing of gaps, terminations, and penetrations of air-barrier assembly.

a. Include junction with roofing membrane building corner condition, and foundation wall intersection fenestration and wall interface.
b. If Architect and Manufacturer’s Representative determine mockups do not comply with requirements, reconstruct mockups and apply weather barrier until mockups are approved.

2. Approval of mockups does not constitute approval of deviations from the Contract Documents contained in mockups unless specifically approved deviations are given in writing.
3. Subject to compliance with requirements, approved mockups may become part of the completed Work if undisturbed at time of Substantial Completion.

C. Manufacturer's Field Service: Register project with weather barrier manufacturer prior to installation of weather barrier and comply with weather barrier manufacturer's Project registration and observation process.

1.6 DELIVERY, STORAGE, AND HANDLING

A. Do not store near heat source or open flame.

1.7 WARRANTY

A. Manufacturer's Product Warranty: To repair or replace weather barrier product that fails in materials within specified warranty period.

1. Warranty Period: 10 years from date of purchase.

B. Manufacturer's Product and Labor Warranty: Manufacturer agrees to repair or replace weather barrier that fails in materials within specified warranty period, including removal and replacement of affected construction up to manufacturer’s limits.

1. Warranty Period: 10 years from date of purchase.

PART 2 - PRODUCTS

2.1 MANUFACTURERS

A. Source Limitations: Obtain weather barrier assembly components, including weather barrier flashing from same manufacturer as weather barrier for a complete system.

2.2 PERFORMANCE REQUIREMENTS

A. General Performance: Installed weather barrier and accessories shall withstand specified wind pressures, liquid water penetration, and water vapor pressures, without failure due to defective manufacture of products.

B. High-Performance Installations:

1. For installation with one of the following building envelope performance or structural characteristics:

   a. Exceeding 65 mph (100 km/h) equivalent structural load.
   b. Exceeding 15 mph (24 km/h) equivalent wind-driven rainwater infiltration.
   c. Buildings with 60 feet (18 m) or more total height above grade plane, as defined in the International Building Code.
   d. Construction with gypsum or cement-based exterior sheathing.
   e. Non-wood based primary structure such as: steel, light gage steel, masonry or concrete.

2.3 WEATHER BARRIER

A. Commercial Building Wrap: ASTM E 2357 passed, ABAA (Air Barrier Association of America) evaluated air barrier assembly, and assembly water resistance per ASTM E 331; with flame-spread and smoke-developed indexes of less than 25 and 450, respectively, when tested in accordance with ASTM E 84; UV stabilized for nine-month exposure; and acceptable to authorities having jurisdiction.

1. Basis-of-Design Product: Subject to compliance with requirements, provide DuPont Safety & Construction: E. I. du Pont de Nemours and Company; Tyvek® CommercialWrap® D, or approved equal.
2. System Description, Single-Layer Drainable: Single-layer weather barrier with integral drainage, including flashing and sealing of penetrations and seams.
3. Drainability: 98 percent or greater when tested in accordance with ASTM E 2273.
4. Air Permeance, Product: Not more than 0.001 cfm/sq. ft. at 1.57 lbf/sq. ft. (0.005 L/s x sq. m at 75 Pa) when tested in accordance with ASTM E 2178.
5. Air Permeance, Assembly: Not more than 0.04 cfm/sq. ft. at 1.57 lbf/sq. ft. (0.2 L/s x sq. m at 75 PA) when tested in accordance with ASTM E 2357 and evaluated by ABAA.
6. Water Penetration Resistance, Product: Hydrostatic head resistance greater than 7.7 feet (2.35 m) in accordance with AATTC 127.
7. Water Penetration Resistance, Assembly: Assembly wall specimen described in ASTM E 2357 to water resistance in accordance with ASTM E 331 to 12.5 lbf/sq. ft. (575 Pa).
8. Water-Vapor Permeance: Not less than 30 perms (1700 ng/Pa x s x sq. m) per ASTM E 96/E 96M, Desiccant Method (Procedure A) or not less than 46 perms (2600 ng/Pa x s x sq. m) per ASTM E 96/E 96M, Water Method (Procedure B).
9. Allowable UV Exposure Time: Not less than nine months when tested in accordance with ASTM G 155 (Accelerated Weathering).
10. Flame Propagation Test: Materials and construction shall be as tested in accordance with NFPA 285.

11. Heat and Visible Smoke Release Rates: Maximum rates in accordance with NFPA 285.

    a. Peak Heat Release: 13,217 Btu/sq. ft. (150 kW/sq. m).
    b. Total Heat Release: 1762 Btu/sq. ft. (20 MJ/sq. m)
    c. Effective Heat of Combustion: 7744 Btu/lb (18 MJ/kg)

12. Weather barrier system to have a VOC content of 30 g/L or less.

2.4 WEATHER BARRIER FLASHING

A. Conformable Weather Barrier Flashing: Composite flashing material composed of micro-creped, polyethylene laminate with a 100 percent butyl-based adhesive layer; AAMA 711 Class A (no primer), Level 3 thermal exposure, 176 deg F (80 deg C) for 7 days.

1. Basis-of-Design Product: Subject to compliance with requirements, provide DuPont Safety & Construction: E. I. du Pont de Nemours and Company; FlexWrap™ NF or equal approved by Architect and Weather Barrier Manufacturer.
2. Conformability: Able to create a seamless sill pan extending up the jambs without cuts, patches, or fasteners.
3. Water Penetration: No leakage at 15 psf (720 Pa) per ASTM E 331.
4. Low Temperature Adhesion: Exceeds minimum value of 1.5 lb./in. (0.26N/mm) at 25 degrees F (minus 4 deg C) as Class A (without primer use).
5. Adhesion After Water Immersion: Exceeds minimum value of 1.5 lb./in. (0.26N/mm), after AAMA 800, Sections 2.4.1.3.1/2.4.1.4.3, Test B.

B. Strip Flashing: Composite flashing material composed of spunbonded polyethylene laminate with 100 percent butyl-based, dual-sided, adhesive layer; AAMA 711, Class A (no primer), Level 3 thermal exposure, 176 deg F (80 deg C) for 7 days.

1. Basis-of-Design Product: Subject to compliance with requirements, provide DuPont Safety & Construction: E. I. du Pont de Nemours and Company; StraightFlash™ or equal approved by the Architect and Weather Barrier Manufacturer.
2. Water Penetration: No leakage at 15 psf (720 Pa) per ASTM E 331.
3. Low Temperature Adhesion: Exceeds minimum value of 1.5 lb./in. (0.26N/mm) at 25 deg F (minus 4 deg C) as Class A without primer use.
4. Adhesion After Water Immersion: Exceeds minimum value of 1.5 lb./in. (0.26N/mm), after AAMA 800, Sections 2.4.1.3.1/2.4.1.4.3, Test B.

2.5 FLUID-APPLIED FLASHING

A. Fluid-Applied Flashing: Trowel or brush applied, non-water soluble, single component, silyl terminated polyether technology (STPE), vapor permeable, flashing material.

1. Basis-of-Design Product: Subject to compliance with requirements, provide DuPont Safety & Construction: E. I. du Pont de Nemours and Company; Tyvek®

Fluid Applied Flashing & Joint Compound+ or equal approved by the Architect and Weather Barrier Manufacturer.

2. VOC Content: ASTM C 1250, less than 2 percent by weight and between 25 to 30 g/L.
3. Water Vapor Transmission: ASTM E 96, Method B, greater than 20 perms (1100 ng/Pa x s x sq. m) at 25 mils (0.635 mm) thick.
4. Minimum Tensile Strength: ASTM D 412, 165 lb/sq. ft. (1140 kPa)
5. Minimum Elongation at Break: ASTM D 412; 360 percent.

2.6 WEATHER BARRIER ACCESSORIES

A. Building-Wrap Tape: Pressure-sensitive plastic tape recommended by weather barrier manufacturer for sealing joints and penetrations in commercial building wrap.

1. Basis-of-Design Product: DuPont Safety & Construction: E. I. du Pont de Nemours and Company; Tyvek® Tape.

B. Closed-Cell Polyurethane Foam Insulation: Low pressure, low expansion, single component polyurethane foam, with maximum flame-spread and smoke-developed indexes of 15 and 25, respectively, per ASTM E 84.

1. Basis-of-Design Product: DuPont Safety & Construction: E. I. du Pont de Nemours and Company; DuPont™ Window & Door Foam.
2. Pressure Build-Up: 0.0247 psi (0.170 kPa) maximum, AAMA 812.
3. Deflection: 0.0050 inch (0.127 mm) maximum, AAMA 812.

C. Fasteners with Self-Gasketing Washers: Commercial building wrap manufacturer's recommended pneumatically or hand-applied fasteners with 2-inch- (50-mm-) diameter, high-density polyethylene cap washers with UV inhibitors.

1. Basis-of-Design Product: DuPont Safety & Construction: E. I. du Pont de Nemours and Company; Tyvek® Wrap Caps.

D. Primer for Flashings: Synthetic rubber-based product; spray applied. Strengthen adhesive bond at low temperature applications between weather products such as self-adhered flashing products, commercial building wraps, and common building sheathing materials.

1. Basis-of-Design Product: DuPont Safety & Construction: E. I. du Pont de Nemours and Company, DuPont™ Adhesive Primer.
2. Peel Adhesion Test: Passes in accordance with ASTM D 3330, Test Method F, for the following.

   a. Peel Angles: 0, 25, 72, and 180 degrees.
   b. Substrates: Concrete masonry units (CMU), exterior gypsum sheathing, oriented strand board (OSB), aluminum, and vinyl.

3. Chemical Compatibility: Pass; AAMA 713.
4. Flame Spread Index: 5; ASTM E 84.
5. Smoke Development Index: 0; ASTM E 84.

PART 3 - EXECUTION

3.1 EXAMINATION

A. Examine substrates, with Installer present, for compliance with requirements.

B. Verify that substrate and surface conditions are in accordance with commercial weather barrier manufacturer recommendations prior to installation.

1. Verify that rough sill framing for doors and windows is sloped downwards towards the exterior and is level across width of the opening.

C. Verify that surfaces to receive weather barrier flashing are clean, dry, and free of frost.

D. Proceed with installation only after unsatisfactory conditions have been corrected.

3.2 PREPARATION

A. Direct water onto an acceptable weather barrier drainage plane with an unobstructed path to exterior of wall.

1. Provide a drainage path for water intrusion through window and door attachment system that collects at window and door sills and directs water to the exterior or weather barrier.

3.3 COMMERCIAL BUILDING WRAP INSTALLATION

A. General: Comply with weather barrier manufacturer's written instructions and warranty requirements.

B. Cover exposed exterior surface of sheathing with weather barrier securely fastened to framing immediately after sheathing is installed.

1. Maintain continuity of air and water barrier assemblies.
2. Start weather barrier installation at a building corner, leaving 12 inches (300 mm) of weather barrier extended beyond corner to overlap.
3. Install weather barrier horizontally starting at lower portion of wall surface.
4. Provide minimum 6 inches (150 mm) overlap at horizontal- and vertical-wrap seams in a shingle manner to maintain continuous downward drainage plane and air and water barrier.

C. Seams: Seal seams with building wrap tape per manufacturer's recommended installation instructions.

1. Shiplap horizontal seams in weather barrier to facilitate proper drainage.

D. Fasteners: Use weather barrier manufacturer’s recommended fasteners to secure weather barrier and install fasteners according weather barrier manufacturer’s installation guidelines.

1. Do not use temporary fasteners to permanently attach weather barrier.
2. Do not place fasteners with gasketing washers where weather barrier flashing will be installed.
3. Install fasteners with gasketing washers through flashing where recommended by manufacturer.

E. Openings: Completely cover openings with weather barrier, then cut weather barrier membrane to openings according to weather barrier manufacturer's installation guidelines.

1. Provide head and jamb flaps and seam overlaps to maintain continuous drainage.
2. Repair damage to weather barrier using method recommended by weather barrier manufacturer.
3. Install flashing according to weather barrier manufacturer's installation guidelines.

3.4 WEATHER BARRIER FLASHING INSTALLATION

A. Installation: Remove wrinkles and bubbles, reposition weather barrier as necessary to produce a uniform, smooth surface.

1. Ensure that ambient and substrate surface temperatures are acceptable in accordance with manufacturer instructions and recommendations.
2. Wipe surfaces to remove moisture, dirt, grease and other debris that could interfere with adhesion.
3. Apply weather barrier manufacturer’s recommended primer over concrete, masonry, and glass-mat gypsum wall sheathing substrates to receive weather barrier flashing.
4. Lap weather barrier flashing a minimum of 2 inches (50 mm) onto weather barrier.
5. Apply pressure over entire surface using roller or firm hand pressure

B. Rough Openings: Shiplap flashing with weather barrier in a shingle manner to maintain a continuous downward drainage plane and air and water barrier in accordance with manufacturer’s written instructions.

1. Apply 9-inch- (230-mm-) wide conformable weather barrier flashing at door and window sills.
2. Ensure that sill flashing does not slope to the interior.
3. Install backer rod in joint between frame of opening product and flashed rough opening on the interior.
4. Apply sealant or closed-cell polyurethane foam insulation around entire opening/fenestration product to create air seal around interior perimeter of window openings in accordance with weather barrier manufacturer’s instructions.
5. Around door and window openings, apply butyl-based flashing to flaps of weather barrier.
6. Use strip flashing with wrap cap screws to secure head flap of the windows.

C. Penetrations: Apply weather barrier manufacturer's recommended weather barrier flashing patches behind fastening plates, such as brick-tie base plates, metal-flashing clips, and metal channels.

1. Seal weather barrier around each penetration with weather barrier manufacturer's recommended self-adhered flashing product or sealant. Integrate products with flanges into the weather barrier.

D. Terminations: Provide minimum 2 inches (50 mm) overlap using strip flashing on adjoining roof and base of wall systems to maintain continuous downward drainage plane.

1. Secure weather barrier with fasteners and weather-barrier flashing.

3.5 FLUID-APPLIED FLASHING INSTALLATION

A. General: Before installing fluid-applied flashing, do the following:

1. Ensure drainage path is not blocked or disrupted. Do not install on walls that do not feature a continuous path for moisture drainage. Blocked or disrupted paths for drainage can result in excess moisture buildup in wall cavity. Do not install below grade.
2. Remove surface dust, dirt, and loose mortar.
3. Verify that surface is free of grease and other contaminants and that surface is smooth.
4. Fill joints in concrete masonry units, and voids in cast-in-place concrete with trowel-applied fluid-applied flashing to ensure surface is flush and smooth.
5. Allow masonry mortar and cast-in-place concrete a minimum of 24 hours to cure before installing fluid-applied flashing.

B. Fluid-Applied Flashing Installation: Using a trowel or brush, apply fluid-applied flashing around perimeter of window and door openings to a minimum thickness of 25 mils (0.635 mm).

1. Extend flashing a minimum of 2 inches (50 mm) onto exterior face of adjacent surface.
2. Inspect for gaps and pinholes in fluid-applied flashing and apply additional coats until no gaps and pinholes appear.
3. Joint Applications: Using a trowel or a brush, fill cracks and voids up to 1/4 inch (6 mm) in width.

a. For joints and cracks between 1/4 and 1/2 inch (6 and 12 mm) wide, cover first with mesh tape.
b. For joints and cracks between 1/2 and 1 inch (12 and 24 mm) wide, cover first with butyl-based strip flashing.
c. Apply a bead, then trowel smooth.
d. Seam coverage should be a minimum of 2 inches (50 mm) wide and 15 to 20 mils (0.38 to 0.51 mm) thick.
e. Inspect for gaps and pinholes in fluid-applied flashing and apply additional coats until no gaps and pinholes appear.

3.6 DRAINAGE MATERIAL INSTALLATION

A. Install drainage material with grooves or channels running vertically in compliance with manufacturer's written instructions.

3.7 FIELD QUALITY CONTROL

A. Manufacturer's Field Service: Engage a factory-authorized service representative to train installers and observe subject test-wall areas and installations.

B. Testing Agency: Engage a qualified third-party testing agency to perform tests and inspections.

C. Test Area: Perform tests on one bay at least 30 feet (9.15 m), by one story. Test Area to include typical window and door openings, building corner, top and bottom up wall conditions.

D. Field Quality Control Testing: Perform the following test on Test Area to include typical window and door openings, building corner, top and bottom up wall conditions.

1. Air Infiltration Whole Building: ASTM E 779 at not more than 0.40 cfm/sf (2.00 L/s per sq. m) at 1.57 lb/sq. ft. (75 Pa), and as required per 2015 WSEC.

E. Prepare test and inspection reports.

3.8 CLEANING

A. Immediately remove release paper and scrap from work area and dispose of material in accordance with requirements of Section 017300 "Execution" and Section 017419 "Construction Waste Management and Disposal."

3.9 PROTECTION

A. Protect installed weather barrier from the following:

1. Damage from cladding, structure, or a component of the structure (e.g., window, door, or wall system).
2. Contamination from building site chemicals, premature deterioration of building materials, or nonstandard use or application of products.
3. Foreign objects or agents, including the use of materials incompatible with weather barrier products.
4. UV exposure in excess of products' stated limits.

END OF SECTION 07 25 00

SECTION 07 26 00 – VAPOR RETARDERS

PART 1 - GENERAL

1.1 REFERENCES

A. ASTM International (ASTM).
   1. E 1745 - "Specification for Plastic Water Vapor Retarders Used in Contact with Soil or Granular Fill under Concrete Slabs."

1.2 SUBMITTALS

A. Provide manufacturer's data and installation instructions.

PART 2 - PRODUCTS

2.0 MATERIALS

A. Vapor Retarder: Fortifiber Building Systems Group, Moistop Ultra 6; ASTM E 1745; 6 mil sheeting, polyethylene coated both sides and reinforced with fiberglass fibers.

B. Tape and Boot: Fortifiber Building Systems Group, Moistop Tape and Boot; pressure-sensitive rubber adhesive.

PART 3 - EXECUTION

3.0 INSTALLATION

A. Install vapor retarder over compacted sub-base at concrete floor slabs. Lap 12 inches and tape all edges. Turn up at edges and secure to foundations or footings. Fix and seal around pipes and conduits.

B. Provide Boots around pipes, conduits, and other penetrations of any size as required to maintain vapor retarder integrity.

END OF SECTION

SECTION 07 31 13 – ASPHALT SHINGLES

PART 1 - GENERAL

1.1 SUMMARY

A. Section Includes
   1. Asphalt shingle roofing.
   2. Flexible sheet membranes for eave protection, underlayment, and valley protection.
   3. Associated metal flashings and accessories.

B. Related Sections
   1. Section 06 10 00 – Rough Carpentry: Roof sheathing.
   2. Section 07 60 00 – Flashing and Sheet Metal: Edge and cap flashings not included in this Section.

1.3 REFERENCE STANDARDS

A. ASTM D1970/D1970M - Standard Specification for Self-Adhering Polymer Modified Bituminous Sheet Materials Used as Steep Roofing Underlayment for Ice Dam Protection ; 2011.

B. ASTM D3161 - Standard Test Method for Wind-Resistance of Asphalt Shingles (Fan-Induced Method) ; 2012.

C. ASTM D3462 - Standard Specification for Asphalt Shingles Made From Glass Felt and Surfaced With Mineral Granules; 2010a.

D. ASTM E108 - Standard Test Methods for Fire Tests of Roof Coverings; 2011.

E. ICC-ES AC188 - Acceptance Criteria for Roof Underlayments; 2007.

F. NRCA MS104 - The NRCA Steep Roofing Manual; National Roofing Contractors Association; 2001, Fifth Edition, with interim updates.

G. UL (RMSD) - Roofing Materials and Systems Directory; Underwriters Laboratories Inc.; current edition.

1.4 SUBMITTALS

A. Product Data: Provide data indicating material characteristics, performance criteria, and limitations. Provide data showing compliance with ESDS 6.5A, Reduced Heat Island Effect: Roofing.

B. Shop Drawings: For metal flashings, indicate specially configured metal flashings.

C. Samples: Submit two samples of each shingle color indicating color range and finish texture/pattern; for color selection.

D. Manufacturer's Instructions: Indicate installation criteria and procedures.

E. Manufacturer's Certificate: Certify that products meet or exceed specified requirements.

F. Maintenance Materials: Furnish the following for Owner's use in maintenance of project.
   1. See Section 01 40 00 – Quality Requirements, for additional provisions.
   2. Extra Shingles: 100 sq ft of each type and color.

G. Warranty: Provide signed copy of Manufacturer's executed Limited Lifetime Warranty in the name of the Owner. Warranty shall be for 40 years.

1.5 QUALITY ASSURANCE

A. Qualifications

   1. Perform Work in accordance with the recommendations of NRCA Steep Roofing Manual.
   2. Products Required to Comply with Fire Resistance Criteria: UL listed and labeled.

B. Regulatory Requirements: Conform with ESDS 6.5A, Reduced Heat Island Effect: Roofing.

1.6 FIELD CONDITIONS

A. Do not install roofing materials when surface temperatures are below 40 degrees F.

PART 2 - PRODUCTS

2.1 SHINGLES

A. Manufacturers and Products:

   1. IKO Cambridge. Owens Corning, Duration Premium Cool (Algae Resistant). Energy Star rated.

B. Asphalt Shingles:

   1. Include SureNail Technology, a woven fabric reinforcing strip in the nailing zone on the shingle's top surface
   2. Nominal Size: 13 ¾ inches x 40 7/8 inches 13-1/4 inches by 39-38 inches.
   3. Exposure: 5 7/8 inches 5-5/8 inches.
   4. Shingles per Square: 64
   5. Coverage per Bundle: 33.3 ft. sq. Square: 98.4 sq. Ft.
   6. Color: As selected from manufacturer's standard. TBD.

7. Standards/Qualifications: ASTM D228, ASTM D3018 (Type 1), ASTM D3161 (Class F Wind Resistance), ASTM D3462, ASTM D7158 D7458 (Class H Wind Resistance), ASTM E108/UL 790 (Class A Fire Resistance), meets the Energy Star requirements for initial solar reflectance of 0.25 and 3-year aged solar reflectance of 0.15, 2010 California Building Energy Efficiency Standards, Title 24, Part 6 requirements, Listed by the Cool Roof Rating Council (CRRC), Florida Product Approval, ICC-ES AC438, and UL ER2453-01.

2.2 SHEET MATERIALS

A. Eave Protection Membrane: Self-adhering polymer-modified asphalt sheet complying with ASTM D1970; 40 mil total thickness; with strippable treated release paper and polyethylene sheet top surface.

1. Manufacturers:
   a. Grace; Product: Ice and Water Shield or Approved.
   b. Substitutions: See Section 01 25 00 - Substitution Procedures or Approved.

B. Underlayment: Synthetic non-asphaltic sheet, intended by manufacturer for mechanically fastened roofing underlayment without sealed seams.

1. Type: Woven polypropylene with anti-slip polyolefin coating on both sides.
2. Minimum Requirements: Comply with requirements of ICC-ES AC188 for non-self-adhesive sheet.
3. Self Sealability: Passing nail sealability test specified in ASTM D1970.
4. Flammability: Minimum of Class A, when tested in accordance with ASTM E108.
5. Low Temperature Flexibility: Passing test specified in ASTM D1970.
6. Water Vapor Permeance: Vapor retarder; maximum of 1 perm, when tested in accordance with ASTM E96/E96M Procedure A (desiccant method).
7. Liquid Water Transmission: Passes ASTM D4869.
8. Functional Temperature Range: Minus 70 degrees F to 212 degrees F.
9. Fasteners: As specified by manufacturer and building code qualification report or approval, if any.
10. Products:
    a. Intertape Polymer Group, Inc; Nova-Seal Premium (25-year limited warranty): www.itape.com.
    b. System Components Corporation, Inc. ; ProTex: www.systemcomponents.net.
    c. Substitutions: See Section 01 25 00 - Substitution Procedures.

C. Flexible Flashing: Self-adhering polymer-modified asphalt sheet complying with ASTM D1970; 40 mil total thickness; with strippable treated release paper and polyethylene sheet top surface.

2.3 ACCESSORIES

A. Nails: Standard round wire shingle type, of hot-dipped zinc coated steel, 12 gage, 0.105 inch shank diameter, 3/8 inch head diameter, of sufficient length to penetrate through roof sheathing or 3/4 inch into roof sheathing or decking.

B. Lap Cement: Fibrated cutback asphalt type, recommended for use in application of underlayment, free of toxic solvents ; as approved by Architect.

C. Continuous Ridge Vent: Cor-a-Vent V-600 or Approved.

2.4 METAL FLASHINGS

A. Metal Flashings: Provide sheet metal eave edge, gable edge, ridge, ridge vents, open valley flashing, chimney flashing, dormer flashing, and other flashing indicated.

1. Form flashings to profiles indicated on Drawings.
2. Form sections square and accurate to profile, in maximum possible lengths, free from distortion or defects detrimental to appearance or performance.

B. Sheet Metal: Prefinished galvanized steel, 0.018 inch/26 gage thick, minimum G90/Z275 hot-dipped galvanized; PVC coated, matching color.

C. Sheet Metal: Galvanized steel, as specified in Section 07 60 00.

D. Bituminous Paint: Acid and alkali resistant type; black color.

PART 3 - EXECUTION

3.1 EXAMINATION

A. Verify existing conditions prior to beginning work.

B. Verify that deck is of sufficient thickness to accept fasteners.

C. Verify that roof penetrations and plumbing stacks are in place and flashed to deck surface.

D. Verify roof openings are correctly framed.

E. Verify deck surfaces are dry, free of ridges, warps, or voids.

3.2 PREPARATION

A. Seal roof deck joints wider than 1/16 inch with deck tape.

B. At areas where eave protection membrane is to be adhered to substrate, cover knot holes with sheet metal.

C. Broom clean deck surfaces before installing underlayment or eave protection.

D. Install eave edge and gable edge flashings tight with fascia boards. Weather lap joints 2 inches and seal with plastic cement. Secure flange with nails spaced 8 inches on center.

3.3 INSTALLATION - EAVE PROTECTION MEMBRANE

A. Install eave protection membrane from eave edge to minimum 4 ft up-slope beyond interior face of exterior wall.

B. Install eave protection membrane in accordance with manufacturer's instructions.

3.4 INSTALLATION - UNDERLAYMENT

A. At Roof Slopes Up to 4:12: Install two layers of underlayment over area not protected by eave protection, with ends and edges weather lapped minimum 4 inches. Stagger end laps of each consecutive layer. Nail in place.

B. At Roof Slopes Greater Than 4:12: Install underlayment perpendicular to slope of roof, with ends and edges weather lapped minimum 4 inches. Stagger end laps of each consecutive layer. Nail in place. Weather lap minimum 4 inches over eave protection.

C. Items projecting through or mounted on roof: Weather lap and seal watertight with plastic cement.

3.5 INSTALLATION - VALLEY PROTECTION

A. Install one ply of flexible flashing, minimum 18 inches wide, centered over valleys.

B. Install flexible flashing in accordance with manufacturer's instructions.

C. Weather lap joints minimum 2 inches.

D. Nail in place minimum 18 inches on center, 1 inch from edges.

E. At Exposed Valleys: Install one layer of sheet metal flashing, minimum 24 inches wide, centered over open valley and crimped to guide water. Weather lap joints minimum 2 inch wide band of lap cement along each edge of first, press roll roofing into cement, and nail in place minimum 18 inches on center, 1 inch from edges.

3.6 INSTALLATION - METAL FLASHING AND ACCESSORIES

A. Weather lap joints minimum 2 inches and seal weather tight with plastic cement.

B. Secure in place with nails at 8 inches on center. Conceal fastenings.

C. Items Projecting Through or Mounted on Roofing: Flash and seal weather tight with plastic cement.

3.7 INSTALLATION - SHINGLES

A. Install shingles in accordance with manufacturer's instructions.

1. Fasten individual shingles using 2 nails per shingle, or as required by code, whichever is greater.
2. Fasten strip shingles using 4 nails per strip, or as required by code, whichever is greater.

B. Place shingles in straight coursing pattern with 5 inch weather exposure to produce double thickness over full roof area. Provide double course of shingles at eaves.

C. Project first course of shingles 3/4 inch beyond fascia boards.

D. Extend shingles 1/2 inch beyond face of gable edge fascia boards.

E. Extend shingles on one slope across valley and fasten. Trim shingles from other slope 2 inches from valley center line to achieve closed cut valley, concealing the valley protection.

F. Cap hips with individual shingles, maintaining 5 inch weather exposure. Place to avoid exposed nails.

G. After installation, place one daub of plastic cement, one inch diameter under each individual shingle tab exposed to weather, to prevent lifting.

H. Complete installation to provide weather tight service.

3.8 PROTECTION

A. Do not permit traffic over finished roof surface.

END OF SECTION

SECTION 07 46 46 - MINERAL FIBER CEMENT SIDING

PART 1 - GENERAL

1.1 SUBMITTALS

A. Product Data: Manufacturer's material description and installation procedures.

B. Shop Drawings: Provide detailed drawings of atypical non-standard applications of cladding junctions and penetrations which are outside the scope of the standard details and specifications provided by the manufacturer.

1.2 WARRANTY

A. Provide manufacturer’s standard warranty.

PART 2 - PRODUCTS

2.1 MATERIALS

A. Siding:
1. Type 1: James Hardie Building Products, Inc., Hardiplank; or approved; fiber reinforced cement, 5/16 inch thick, 5-1/2 inch width (4-1/4 inch coverage), length 12 feet, smooth texture. Factory primed.
2. Type 2: James Hardie Building Products, Inc., Hardie Panel; or approved; fiber reinforced cement, 5/16 inch thick, sheet sizes as shown, smooth texture. Factory primed.

B. Soffits: James Hardie Building Products, Inc., Hardisoffit; or approved; fiber reinforced cement, 1/4 inch thick, 24" x 8", smooth texture, vented and non-vented as shown.

C. Trim (and Batts): Per drawings: 1x and 2x W. Red Cedar S45 or James Hardie Building Products, Hardi-Trim, 7/16” thick, smooth texture, factory primed.

D. Fasteners:
1. Hardiplank: 6d common corrosion resistant nails or 1-1/4 inch roofing nails.
2. Hardie panel: as recommended by manufacturer.

E. Rainscreen Strapping: Pressure treated 1x2 wood strapping.

PART 3 - EXECUTION

3.1 INSTALLATION

A. Rainscreen Strapping/Furring: Install vertically, allowing for weeping at base of each bay including at obstructions like windows. Install insect screen at bottom of each bay/water flashing vent.

B. Install siding, soffits and trim in accordance with manufacturers instructions and as shown and specified.

C. Install materials straight and true. Leave 1/8 inch space between ends of siding and trim. Provide sealant at end joints in accordance with manufacturer's recommendations.

D. Install reveal panel system per manufacturer’s instructions.

E. Drive nail heads flush with surface of siding and trim.

END OF SECTION

SECTION 07 50 00 - THERMOPLASTIC MEMBRANE ROOFING

PART 1 - GENERAL

1.1 SUMMARY

A. Section includes TPO roofing, roof insulation, and accessories.

1.2 REFERENCES

A. ASTM International (ASTM):
   1. D 751 - “Test Methods for Coated Fabrics.”
   2. D 4637 - "Specification for Vulcanized Rubber Sheet Used In Single-Ply Roof Membrane."

B. South Coast Air Quality Management District (SCAQMD)
   1. Rule 1168 – Low / No VOC Adhesives and Caulking
      a. Maximum allowed VOC Levels (G/L) as indicated.

VOC LIMIT PRODUCT TYPE	(G / L)
Multipurpose Construction Adhesives	70
Structural Glazing Adhesives	100
Single-Ply Roof Membrane Adhesives	250
Structural Wood Member Adhesive	140
Architectural Sealants, Including Caulk	250

1.3 SYSTEM DESCRIPTION

A. Performance Requirements:
   1. Roofing installer shall be responsible for weather tightness of membrane roofing and associated flashing.

1.4 SUBMITTALS

A. Manufacturer's information on materials and step-by-step application procedures.

B. Shop Drawings showing cricket configuration, walkway locations, applicable manufacturer’s standard details, and proposed custom details, if any.

C. Show compliance with SCAQMD Rule 1168 Low/No VOC adhesive or caulks.

1.5 QUALITY ASSURANCE

A. Qualifications: Applicator shall have a minimum of 5 years experience installing roofing of type specified and be certified, in writing, by roofing materials manufacturer.

B. Pre-installation Conference:
   1. Arrange and participate in a coordination meeting to be attended by all installers and material manufacturers' representatives involved in the Work specified and in related Sections to review and prepare written step-by-step application proce-

dure, including a written detailed Statement of Work and Shop Drawings for a complete elastomeric membrane roofing system.
   a. Following the pre-installation conference, furnish a written statement with date of meeting, names and affiliations of participants.
   b. Also furnish written list of any modifications of Contract Documents proposed in the step-by-step application procedure. Such modifications shall be done at no increase in Contract Sum.
2. Work of this Section shall not proceed until the Architect has reviewed and accepted the documents to be submitted following the pre-installation conference.
3. Prior to starting Work, arrange a Jobsite meeting with the Architect and participants in the pre-installation conference to discuss Contract Documents, accepted step-by-step application procedure, Shop Drawings, job and surface readiness, and material storage and protection.
4. Notify Architect 7 calendar days prior to Jobsite Meeting, starting Work and, if Work is done intermittently, before restarting Work.

1.6 DELIVERY, STORAGE, AND HANDLING

A. Follow storage and handling requirements of manufacturer.

B. Loads placed on roof from storage of materials shall not exceed safe loading requirements.

1.7 WARRANTY

A. Roofing system shall be warranted by the manufacturer to be watertight and weatherproof for a minimum of 20 years from date of acceptance.

B. Roofing assembly shall be warranted by the Contractor to be watertight and weatherproof for a period of 5 years from date of acceptance.

PART 2 - PRODUCTS

2.1 MANUFACTURERS

A. Versaweld, Carlisle SynTec Inc., G.A.F., JPS Elastomerics Corporation, Firestone Building Products Company, or approved equal. Use one manufacturer's product line for a complete system.

2.2 MATERIALS

A. Membrane: Fully adhered TPO 60 mil Roofing System.
   1. Reinforced thermoplastic polyolefin membrane sheet 5 foot wide at perimeters and 10 foot wide at field.
   2. Packaging to bear UL label.
   3. Thickness: ASTM D 751, nominal 0.060 inch.
   4. Color: White with emissivity equal or greater than 0.8
   5. Energy Star compliant.

B. Flashing:

1. Same as specified membrane except for perimeter use of EverGuard TPO laminated metal flashings for gravel stops or drip edges.
2. Vent Stacks, Pipes, Drains, and Corners: Prefabricated pipe boots and inside and outside corners provided by manufacturer.

C. Bonding Adhesive: manufacturer's bonding adhesive.

D. Sealant: manufacturer's products, to seal membrane to metal.

E. Seam Caulk: manufacturer's products, to seal exposed cut edges of reinforced membrane.

F. Tapered Edge Strips: High density fiber board.

G. Mechanical Fasteners: In accordance with manufacturer's recommendations.

H. Termination Bars: As recommended by manufacturer.

I. Edge Metal Systems: Membrane manufacturer's standard, install in accordance with manufacturer's standard details.

J. Insulation Cover Board: ½" G.P. Dens Deck roofing board.

K. Insulation: R-38 rigid polyisocyanurate with tapered insulation as shown on drawings to drain, or as required for full drainage.

L. Roof Walkways: Material and application as required by roofing manufacturer and as shown on drawings.

PART 3 - EXECUTION

3.1 EXAMINATION

A. Examine surfaces to receive Work of this Section. Surfaces shall be free from material projections, dust, loose or foreign materials and any other obstructions, and shall present a smooth plane, ready for installation of elastomeric membrane roofing Work.

B. Report in writing to Contractor, with copy to Architect, any conditions which may prove detrimental to Work of this Section. Failure to observe this injunction shall constitute waiver to subsequent claims to the contrary and shall make the roofing installer responsible for any corrections required. Such corrections shall be made at no increase in Contract Sum. Commencement of Work will be construed as acceptance of surfaces to receive this Work as satisfactory.

3.2 PREPARATION

A. Surfaces to receive membrane roofing shall be firm, smooth, clean and dry. Roofing operations shall not be conducted when water from any source is present or materials are wet.

3.3 INSTALLATION

A. Install materials in accordance with manufacturer's instructions, reviewed Shop Drawings, detailed Specifications, and step-by-step application procedures.

B. Membrane:
   1. Loosely lay membrane over roof deck and allow to relax 30 minutes minimum before bonding, splicing or attaching.
   2. Bond, splice and attach in accordance with membrane manufacturer's instructions. Neatly fit all joints and miters.
   3. Flash at building wall and at all penetrations through membrane in accordance with manufacturer's recommendations.
   4. Finish in 1 day's operation, application of all membrane roofing to a line of termination at end of day's Work.

C. Roof Drains and Flashing : Install in accordance with membrane roofing manufacturer's installation instructions.

3.4 COMPLETION EACH DAY

A. Expedite installation so that Work started in any particular area will result in fully completed and protected roof system at end of the same work day. Roofing that has not been fully completed in one workday will not be acceptable.

3.5 CLEANING

A. Remove excess roofing and debris, and leave premises in acceptable condition.

END OF SECTION

SECTION 07 60 00 - FLASHING AND SHEET METAL

PART 1 - GENERAL

1.1 SUMMARY

A. Related Sections:
1. 06 10 00 Rough Carpentry.
2. 07 25 00 Weather Barriers.
3. 07 50 00 Thermoplastic Membrane Roofing.
4. 07 31 13 Asphalt Shingles.
5. 07 92 00 Joint Sealants.
6. Division 8 Exterior Openings

1.2 REFERENCES

A. ASTM International (ASTM):
1. A 653 - "Specification for Steel Sheet, Zinc-Coated (Galvanized) or Zinc-Iron Alloy-Coated (Galvannealed) by the Hot-Dip Process."
2. B 29 - "Specification for Refined Lead."
3. B 32 - "Specification for Solder Metal."

B. Federal Specification (FS).

C. Sheet Metal and Air Conditioning Contractors National Association (SMACNA).
1. "Architectural Sheet Metal Manual."

1.3 SYSTEM DESCRIPTION

A. Comply with details and recommendations of SMACNA "Architectural Sheet Metal Manual."

1.4 SUBMITTALS

A. Shop Drawings showing shape, size, material, assembly, joints, seams, laps, fastenings, and connections of all flashing and sheet metal Work.

B. Written statements, in cooperation with Section 07 50 00, indicating step-by-step application procedure for flashing and sheet metal Work as a part of the Thermoplastic membrane roofing system.

1.5 WARRANTY

B. Furnish two year material and workmanship warranty.

PART 2 - PRODUCTS

2.1 MATERIALS

B. Prefinished Metal Flashing (used at parapet caps, gutters, collector heads, scuppers and downspouts): 26 gauge prefinished metal with Kynar finish from AEP span.

B. Galvanized Sheet Steel: Commercial Quality, ASTM A 526, shop primed 22 gage minimum, galvanized in conformance with ASTM A 525, G 90 coating designation.

C. Nails, Discs, and Rivets: Hot-dip galvanized steel nails. Where sheet metal is built in over roofing materials or other sheet, use nails with 1 inch diameter tinned discs. Rivets shall be tinned soft iron rivets.

D. Fastenings: Bolts and nuts, powder-driven fasteners, screws, washers, and other fasteners for exterior use shall be galvanized.

E. Anchors to Concrete: Equivalent to Phillips "Red Head."

F. Reglets: Extruded aluminum with clear lacquer coating, Morrison & Co., "Cushion Lock," Fry Reglet Corporation.

G. Solder: ASTM B 32, Alloy Grade 50 A.

H. Flux: FS 0-F-506C.

I. Sealant: As specified in Section 07 92 00.

J. Pipe Flashing: Compression molded EPDM rubber, conical shaped steps to provide a taut weatherproof seal around pipes. Sizes as required. Provide manufacturer's standard stainless steel clamps.

K. Flexible Wall Flashing: Grace Perm-A-Barrier.

2.2 FABRICATION

A. Fabricate all flashing and sheet metal Work in accordance with requirements of SMACNA and as shown.

B. Fabricate as much Work in shop as is practicable.

C. Accurately form all sheet metal Work to fit snugly with exposed edges folded under at least 1/2 inch without sharp exposed corners.

D. Seam and solder watertight all corners and joints shown or required to make a watertight installation.

PART 3 - EXECUTION

3.1 PREPARATION

A. Remove all dirt and foreign materials from surfaces to receive flashing and sheet metal. Surfaces shall be clean, smooth, even, and free from defects, prior to installation.

3.2 INSTALLATION

A. Install materials in accordance with SMACNA recommendations, reviewed shop drawings, detailed Specifications, and step-by-step application procedures.

B. Provide expansion joints as required to permit normal expansion and contraction without straining of metal, joints, or fasteners. Provide at all material junctions and at a maximum of 30 feet in straight runs. Unless otherwise shown, select joint type best suited and least obtrusive for conditions of installation.

C. Perform all cutting, fitting, drilling, and other similar Work in sheet metal as required to accommodate other Work.

D. Provide sheet lead sanitary vent flashing with all seams burned watertight. Turn top of sleeve into roof vent in a neat manner so that lead extends down into vent pipe 1-1/2 inch minimum.

E. Pipe and Conduit Penetrations: Provide EPDM rubber flashing collars, extend base flanges 4 inch minimum onto roof. Provide stainless steel draw bands to secure top of collar to pipe or conduit. Allow space at top of collar for application of sealant specified in Section 07 92 00.

F. Completed installation shall be watertight and divert water away from the building towards drainage.

3.3 CLEANING

A. Following installation, clean all exposed surfaces of flashing and sheet metal Work of excess solder, flux, and dirt. Remove grease and oil with appropriate solvent. Wipe surfaces with clean rags and leave in condition suitable for application of paint as specified in Section 09 90 00.

END OF SECTION

SECTION 07 84 00 - FIRESTOPPING

PART 1 - GENERAL

1.1 SUMMARY

A. Provide firestopping Work at all openings in fire-rated floors and wall assemblies, both blank (empty) and those accommodating cables, conduits, pipes, ducts, and similar items as shown, specified, and required.

B. Coordinate Work of this Section with the Work of related Sections to maintain fire resistive ratings of walls, partitions, floors, ceilings, and roofs.

C. Related Sections:
1. Gypsum Board: Section 09 29 00
2. Fire-Suppression Sprinkler Systems: Division 21.
3. Plumbing: Division 22.
4. HVAC: Division 23.
5. Electrical: Division 26.

1.2 REFERENCES

A. ASTM International (ASTM):
1. E 814 - "Test Method for Fire Tests of Through-Penetration Fire Stops."

1.3 SUBMITTALS

A. Product Data: Manufacturer's information on materials, fabrication, and installation.

B. Certificates: Certification that products proposed for use comply with design criteria specified.

1.4 QUALITY ASSURANCE

A. Regulatory Requirements: Conform to applicable building code requirements for fire-resistive ratings of areas to receive fire safing.

B. Firestopping systems shall conform to both flame and temperature ratings as required by local regulatory agencies having jurisdiction.

C. Firestopping materials shall be asbestos free and shall not incorporate or require the use of hazardous solvents.

1.5 DELIVERY, STORAGE, AND HANDLING

A. Store products indoors, protected from moisture and other sources of damage.

B. Follow additional instructions of manufacturer.

PART 2 - PRODUCTS

2.1 MANUFACTURERS

A. Specified Technologies, Inc.; Dow Corning Corporation; 3M Fire Protection Products; or approved. All firestopping materials shall be products of one manufacturer to the maximum extent possible. Specified Technologies, Inc. (STI) products are specified as a standard of quality, function, and appearance unless otherwise noted.

2.2 MATERIALS

A. Firestopping: Specified Technologies, Inc.
   1. Firestop Mortar: STI SpecSeal Mortar.
   2. Firestop Sealants and Caulking: STI SpecSeal Sealant. Maximum VOC= 250 g/L.
   3. Firestop Putty: STI SpecSeal Firestop Putty Bars and Pads.
   4. Firestop Collars: STI SpecSeal Firestop Collars.
   5. Wrap Strip Strips: STI SpecSeal WrapStrip.
   6. Forming and Damming Materials: Mineral fiberboard or other type recommended by firestop manufacturer.
   7. Other: as shown on drawings.

PART 3 - EXECUTION

3.1 EXAMINATION

A. Examine areas and conditions to receive firestopping. Do not proceed with firestopping Work until unsatisfactory conditions have been corrected.

B. Verify that environmental conditions are safe and suitable for installation of firestopping.

3.2 INSTALLATION

A. General: Install materials where shown, as specified, and in accordance with manufacturer's instructions. Install insulation after all piping and wiring have been installed, inspected, and approved.

B. Firestopping
   1. Coordinate with other Sections to assure that all pipe, conduit, cable, and other items which penetrate fire rated assemblies have been permanently installed prior to installation of firestopping. Schedule and sequence Work to assure that all partitions and other construction which would conceal penetrations are not erected prior to installation of firestopping.
   2. Forming and Damming Materials: Clean substrates of dirt, dust, grease, oil, loose material, or other matter. Install in accordance with manufacturer's instructions leaving no voids.
   3. Mix and apply in accordance with manufacturer's instructions. Apply in thickness as required for system specifications.

4. Ensure that compound is in contact with all surfaces and that entire opening is filled with firestopping compound.

3.3 CLEANING

A. Remove spilled and excess materials adjacent to firestopping without damaging adjacent surfaces.

B. Leave finished Work in neat, clean condition with no evidence of spillovers or damage to adjacent surfaces.

3.4 PROTECTION

A. Where firestopping is installed at locations which will remain exposed in the completed Work, provide protection as necessary to prevent damage to adjacent surfaces and finishes, and protect as necessary against damage from other construction activities.

END OF SECTION

SECTION 07 92 00 – JOINT SEALANTS

PART 1 - GENERAL

1.1 REFERENCES

A. ASTM International (ASTM):
   1. C 920 - "Specification for Elastomeric Joint Sealants."

B. South Coast Air Quality Management District (SCAQMD)
   1. Rule 1168 – Low / No VOC Adhesives and Caulking
      a. Maximum allowed VOC Levels (G/L) as indicated.

VOC LIMIT PRODUCT TYPE	(G / L)
Indoor Carpet Adhesives	50
Carpet Pad Adhesives	50
Outdoor Carpet Adhesives	150
Wood Flooring Adhesives	100
Rubber Floor Adhesives	60
Subfloor Adhesives	50
Ceramic Tile Adhesives	65
VCT and Asphalt Tile Adhesives	50
Drywall and Panel Adhesives	50
Cove Base Adhesives	50
Multipurpose Construction Adhesives	70
Structural Glazing Adhesives	100
Single-Ply Roof Membrane Adhesives	250
Structural Wood Member Adhesive	140
Architectural Sealants, Including Caulk	250

1.2 SUBMITTALS

A. Manufacturer's data on materials, and application equipment and procedures.

B. Show compliance with SCAQMD Rule 1168 Low/No VOC Adhesives and Caulks.

1.3 QUALITY ASSURANCE

A. Qualifications: Applicator shall have a minimum of 3 years experience in the satisfactory installation of joint sealants of the types specified.

A. Regulatory Requirements: Evergreen Sustainable Development Standard (ESDS)
   1. Criterion 6.2 Low VOC Adhesives and Sealants
   2. Criterion 7.15 Integrated Pest Management

B. Comply with SWR Institutes "Sealants, The Professional's Guide," latest edition.

1.4 WARRANTY

A. Furnish 2 year special warranty.

PART 2 - PRODUCTS

2.1 MATERIALS

A. All Sealants and Caulking exposed to the interior shall have VOC levels at or less than those specified in Rule 1168 of the South Coast Air Quality Management District (SCAQMD).

B. Exterior Sealant: Tremco, Pecora Corporation, Sonneborn Building Products, ASTM C 920, single component, gun-grade, non-sag, acrylic terpolymer sealant, with movement capability of plus or minus 12-1/2 percent. Color as selected.

C. Interior Sealant: Tremco, Pecora Corporation, Sonneborn Building Products, single component, gun-grade, paintable, acrylic-latex, water-base sealant. Color as selected.

D. Sanitary Sealant: Dow-Corning, General Electric, single component, gun-grade, silicone rubber sealant, with movement capability plus or minus 25 percent.

E. Acoustical Sealer: Tremco, Pecora Corporation, permanently plastic, non-skinning, non-bleeding, non-staining sealant, for use in concealed spaces.

F. Glazing Sealant: As specified in Section 08 80 00.

G. Accessories:
   1. Joint Backing: Closed cell neoprene or polyethylene, compatible with sealant materials, of sizes and shapes as recommended by the joint sealant manufacturer.
   2. Pest Screen: Provide rodent and corrosion-proof screens (e.g., copper or stainless steel mesh or rigid cloth) at openings greater than ¼”.

H. Primers, Solvents, and Cleaning Materials: Non-staining and non-injurious to exposed surfaces, of types as recommended by the joint sealant manufacturer.

PART 3 - EXECUTION

3.1 GENERAL

A. Building Envelope: Caulk, gasket or otherwise seal all joints, transitions in materials and penetrations in the building envelope to ensure a continuous air barrier.

B. Seal all wall, floor and joint penetrations to prevent pest entry. Use pest screens for openings greater than ¼”.

C. Seal all material joints on interior.

D. Seal at acoustical walls.

3.2 PREPARATION

A. Surface Preparation:
   1. Thoroughly clean and dry surfaces prior to installation.
   2. Clean metals with manufacturer's recommended solvent, wipe clean.
   3. Remove any dust, dirt, oil, grease, and any other foreign substances from surface areas to receive sealant.
   4. Prime surfaces as recommended by sealant manufacturer. Prime all concrete, brick masonry, and concrete unit masonry substrates, regardless of manufacturer's requirements.
   5. Mask off any adjacent surfaces which are not to receive sealant.

3.3 APPLICATION

A. General: Comply with sealant manufacturer's installation instructions. Provide bond breaker tape as required to prevent sealant adhesion to backing. Joint depth 1/2 joint width, but not less than 1/4 inch nor more than 1/2 inch, unless otherwise specified by sealant manufacturer.

B. Joint Backing: Install as recommended by sealant manufacturer to prevent sealant from adhering to rigid, inflexible materials or joint surfaces where such adhesion would result in sealant failure. Sealant shall bond two opposing joint surfaces.

C. Sealant Application:
   1. Do not install sealants during rainfall or very windy conditions when windborne contaminants can become embedded in uncured sealant.
   2. Apply materials with hand gun, powered gun, or trowel to completely fill voids and joints, free of wrinkles and skips.
   3. Observe temperature control in accordance with sealant manufacturer's written recommendations.
   4. Do not allow any air entrapment in sealant.
   5. Extrude sealant fully into joint to be sealed, tool sealant to press into joint, assuring full adhesion to sides of joint surfaces, resulting in a uniformly smooth concave profile.
   6. Tool sealant using only materials recommended by sealant manufacturer.
   7. Remove masking tape immediately after sealant application to produce clean, sharp line.
   8. Do not seal weeps or drainage provisions in sill channels.
   9. Allow sealants to cure adequately prior to covering with other Work.
   10. Coordinate sealant installation with concrete, masonry, and flashing applications.
   11. Apply sand to wet sealant surfaces to match finish of adjacent concrete and masonry conditions.

3.4 CLEANING

A. Remove all empty containers, materials, and debris from the site. Dispose off site in accordance with applicable regulations.

B. Remove any sealant spills, masking materials, and similar items from all surfaces not intended for their application.

C. Clean and repair surfaces soiled or damaged by sealant Work.

END OF SECTION

SECTION 08 11 00 – METAL DOORS AND FRAMES

PART 1 - GENERAL

1.1 SUMMARY

A. Section includes exterior and interior metal doors and door and relite frames.

B. Related Sections:
1. Section 08 14 00 Wood Doors
2. Section 08 70 00 Finish Hardware
3. Section 08 80 00 Glazing

1.2 REFERENCES

A. ASTM International (ASTM).
1. A 653 - "Specification for Steel Sheet, Zinc-Coated (Galvanized) or Zinc-Iron Alloy-Coated (Galvannealed) by the Hot-Dip Process."
2. A 1008 - “Specification for Steel, Sheet, Cold-Rolled, Carbon, Structural, High-Strength Low-Alloy and High Strength Low-Alloy with Improved Formability.”

B. International Building Code (IBC).

C. Steel Door Institute (SDI).
1. 100 - "Recommended Specifications, Standard Steel Doors and Frames."
2. 105 - "Recommended Erection instructions for Steel Frames."
3. 107 - "Hardware on Steel Doors (Reinforcement- Application)."

D. Underwriters Laboratories, Inc. (UL).
1. UL-10B - "Standards for Fire Tests of Door Assemblies."

1.3 SUBMITTALS

A. Certificates of compliance with UL requirements.

1.4 QUALITY ASSURANCE

A. Qualifications:
1. Fire-rated metal doors and frames shall be manufactured by one company listed in Underwriters Laboratories, Inc. "Building Material List."
2. Comply with UL Publication UL-10B.
3. Comply with SDI Publication, 100.

B. Regulatory Requirements:
1. Fire rated doors shall conform with IBC requirements and UL classifications shown, and bear appropriate UL label.
   a. All exit-access and corridor doors shall bear an approved label showing required rating followed by the letter “S” verifying testing for smoke control in accordance with IBC Section 715.

PART 2 - PRODUCTS

2.1 MATERIALS

A. Doors: Commercial quality cold-rolled sheet steel in conformance with ASTM A 1008. Stretcher level steel for door faces. Hot-dip galvanize steel for exterior doors in conformance with ASTM A 653, G90 coating designation.

B. Frames: Commercial quality cold-rolled sheet steel in conformance with ASTM A 1008. Hot-dip galvanize steel for exterior frames in conformance with ASTM A 653, G90 coating designation.

C. Hardware: Comply with SDI 107. Furnished as specified in Section 08 70 00.

2.2 FABRICATION

A. Exterior Doors:
1. Type: Level 2 - Heavy-duty, full flush design, in accordance with SDI 100 for Model 1 doors.
2. Face Sheets: 18 gage minimum.
3. U-Factor: to suit Energy Code requirements shown on Drawings.

B. Interior Doors:
1. Type: Level 2 – Heavy duty full flush design in accordance with SDI 100 for Model 1 door.
2. Face Sheets: 18 gage minimum.
3. Provide ADA and fire rating compliant windows where indicated.

C. Door Frames: One-piece, welded, 16 gage minimum, with integral stops, jambs, and trim in accordance with SDI 100 for Level 2 Model 1 doors.

D. Relite (interior window) Frames: One-piece, welded, 18 gage minimum, frame setup for specified glazing.

PART 3 - EXECUTION

3.1 INSTALLATION

A. Install in accordance with SDI 105, manufacturer's recommendations, and requirements of labeling authority.

B. Frames: Install plumb, rigid, in true alignment, and fastened to retain their position and clearance during construction of partitions.

C. Doors: Install plumb, rigid, in true alignment in a prepared opening and fasten to achieve maximum operational effectiveness and appearance of unit.

D. Hardware:
   1. Install in accordance with manufacturer's instructions, regulatory requirements, and industry standards, taking care not to damage doors, frames, or their finishes, with all mortises flush, and all screws turned to a flat seat.
   2. Adjust and lubricate hardware, as required, for proper operation.
   3. Upon completion of installation, doors and finish hardware shall operate smoothly. Doors shall stand open in any position.

3.2 ADJUSTING

A. Replace or rehang doors which are hinge-bound and do not swing or operate freely.

B. Install hardware, adjust, and lubricate for proper operation.

END OF SECTION

SECTION 08 14 00 - WOOD DOORS

PART 1 - GENERAL

1.1 SUMMARY

A. Section Includes:
1. Solid-core doors with wood-veneer faces.
2. Hollow-core doors with wood-veneer faces.

B. Related Requirements:
1. Section 08 11 00 Metal Doors and Frames
2. Section 08 70 00 Finish Hardware
3. Section 08 80 00 Glazing

1.2 REFERENCES

A. Commercial Standard (CS).
1. CS-171 - "Hardwood Veneered Doors (Solid-Core, Hollow-Core, and Panel and Sash)."
2. CS-236 - "Mat-Formed Wood Particleboard."

B. International Building Code (IBC).

C. Underwriters Laboratories, Inc. (UL).
1. UL-10B - "Standards for Fire Tests of Door Assemblies."

D. Window & Door Manufacturers Association (WDMA).
1. I.S.1-A - "Industry Standard for Architectural Wood Flush Doors."
2. I.S.6 - “Industry Standard for Architectural Stile &Rail Doors.”

E. South Coast Air Quality Management District (SCAQMD)
1. Rule 1168 – Low / No VOC Adhesives and Caulking
   a. Maximum allowed VOC Levels (G/L) as indicated.

VOC LIMIT PRODUCT TYPE	(G / L)
Multipurpose Construction Adhesives	70
Architectural Sealants, Including Caulk	250

1.3 SUBMITTALS

A. Product Data: For each type of door.

B. Sustainable Design Submittals:
1. Product Data: For composite wood products, indicating that product contains no added urea formaldehyde.

C. Shop Drawings: Indicate location, size, and hand of each door; elevation of each kind of door; construction details not covered in Product Data; and the following:
   1. Dimensions and locations of blocking.
   2. Dimensions and locations of mortises and holes for hardware.
   3. Dimensions and locations of cutouts.
   4. Undercuts.
   5. Doors to be factory finished and finish requirements.
   6. Fire-protection ratings for fire-rated doors.

D. Samples: For factory-finished doors.

1.4 QUALITY ASSURANCE

A. Qualifications: Construction shall meet or exceed requirements of WDMA I.S.-1.

B. Regulatory Requirements:
   1. Fire rated doors shall conform with IBC requirements and UL classifications shown, and bear appropriate UL label.
      a. All exit-access and corridor doors shall bear an approved label showing required rating followed by the letter “S” verifying testing for smoke control in accordance with IBC Section 715.

1.5 DELIVERY, STORAGE, AND HANDLING

A. Deliver doors after building is enclosed and gypsum board work is dry. Store flat on a level surface in a dry, well ventilated area where relative humidity is 50 percent to 55 percent at 70 degrees F. Cover to keep clean but allow air circulation. Handle with clean gloves and do not drag doors across one another or across other surfaces.

1.6 WARRANTY

A. Furnish manufacturer’s standard warranty. Furnish statement that mortised butt hinges will remain permanently attached to fire doors.

PART 2 - PRODUCTS

2.1 MANUFACTURERS

A. Flush wood doors manufactured by Lynden Door Company, Weyerhaeuser Company, Algoma Hardwoods, Inc., and Vancouver Door Company or approved equal will be acceptable subject to conformance with specified requirements.

B. Core of doors to contain No Added Urea Formaldehyde (NAUF).

2.2 MATERIALS

A. Face Veneer at Transparent Finished Doors: Select white maple, rotary cut, WDMA premium grade, standard thickness, kiln dried and smoothly sanded.

B. Face Veneer at Paint Grade Doors: Birch, WDMA paint grade, standard thickness, kiln dried and smoothly sanded.

C. Edge Bands: Select white birch at non-rated doors, maple at fire-rated doors.

D. Crossbands: 1/16 inch thick kiln dried hardwood.

E. Cores:
1. Solid Core: Kiln dried softwood blocks or solid particleboard in conformance with CS-171 or CS-236 at non-rated doors. Incombustible mineral core at fire-rated doors. Cores shall comply with NAUF requirements.
2. Hollow Core: Use Institution grade hollow core.

F. Hardware: Furnished as specified in Section 08 70 00.

G. Doors may be prefinished as specified in Section 09 90 00 at Contractor's option.

PART 3 - EXECUTION

3.1 EXAMINATION

A. Verify that door frames are of types required for doors and are installed as required for proper installation of doors. Do not install doors in frames which would hinder operation of doors.

3.2 INSTALLATION

A. Comply with requirements of WDMA I.S.-1 and labeling authority, reviewed Shop Drawings, and manufacturer's instructions.

B. Install doors plumb, rigid, in true alignment in a prepared opening and fasten to achieve maximum operational effectiveness and appearance of unit.

C. Hardware:
1. Install in accordance with manufacturer's instructions, regulatory requirements, and industry standards, taking care not to damage doors, frames, or their finishes, with all mortises flush, and all screws turned to a flat seat.
2. Adjust and lubricate hardware, as required, for proper operation.
3. Upon completion of installation, doors and finish hardware shall operate smoothly. Doors shall stand open in any position.

3.3 ADJUSTING

A. Replace or rehang doors which are hinge-bound and do not swing or operate freely.

B. Replace pre-finished doors damaged during installation.

END OF SECTION

SECTION 08 31 00 – ACCESS DOORS AND PANELS

PART 1 - GENERAL

1.1 SUBMITTALS

A. Product Data: Manufacturer's information on materials, fabrication, and installation of all access doors and panels.

1.2 QUALITY ASSURANCE

A. Qualifications: Installation shall be by the manufacturer or authorized representative.

PART 2 - PRODUCTS

2.1 MATERIALS

A. Access Doors:
   1. Manufacturer: Milcor, or approved.
   2. Wall Access Doors:
      a. Fire Rated: 1-1/2 hour "B" label at rated partitions.
      b. Flush Panel for Gypsum Board: Style DW.
      c. Sizes: Minimum 12 inches square for single valves, minimum 18 inches square for groups of valves.
   3. Ceiling Access Doors:
      a. Fire Resistive for Gypsum Board: Style ATR.
      b. Flush Panel for Gypsum Board: Style DW.
      c. Recessed Panel for Acoustical Ceilings: Style AT.
      d. Sizes: Minimum 24 inches square, or as shown on drawings.
   4. Hardware: Manufacturer's standard with flush, key operated cam locks. Provide best core and locks. Key to Owner’s direction.
   5. Finishes: Manufacturer's standard factory applied baked enamel primer.

PART 3 - EXECUTION

3.1 EXAMINATION

A. Verify that openings to receive access doors are satisfactory for their installation.

3.2 INSTALLATION

A. Install access doors, including associated accessories, and joint sealers in accordance with manufacturers' instructions.

B. Coordinate access door sizes and locations with drawings AND Divisions 22, 23, 26, 27, and 28 components that require access.

C. Paint access panels/doors to match adjacent wall/ceiling surface.

3.3 ADJUSTMENT

A. Following installation, adjust access doors for smooth operation.

END OF SECTION

SECTION 08 33 13– COUNTER COILING DOOR

PART 1 - GENERAL

1.1 SUMMARY

A. Overhead coiling counter fire doors.

B. Work under this section includes the requirements for the installation, field finish and adjusting of the overhead coiling counter fire door. Items not specifically mentioned, but necessary to complete the work shall be furnished, matching the items specified in quality and finish.

C. Related Sections:

1. Section 06 20 00 Finish Carpentry
2. Division 26 - Electrical

1.2 REFERENCES

A. ASTM A 653 - Standard Specification for Steel Sheet, Zinc-Coated (Galvanized) or Zinc-Iron Alloy-Coated (Galvannealed) by the Hot-Dip Process.

B. ASTM A 666 - Standard Specification for Austenitic Stainless Steel Sheet, Strip, Plate, and Flat Bar.

C. ASTM A 924 - Standard Specification for General Requirements for Steel Sheet, Metallic-Coated by the Hot-Dip Process.

D. NFPA-80 – Standard for Fire Doors and Fire Windows.

1.3 DESIGN / PERFORMACE REQUIREMENTS

A. Fire Rated Assemblies: Provide assemblies complying with NFPA 80 and listed in UL Directory or Intertek Testing Services (Warnock Hersey Listed) Directory.

1.4 SUBMITTALS

A. Submit under provisions of Section 01 33 00.

B. Product Data: Manufacturer's data sheets on each product to be used, including:

1. Preparation instructions and recommendations.
2. Storage and handling requirements and recommendations.
3. Details of construction and fabrication.
4. Installation methods.

C. Shop Drawings: Include detailed plans and elevations, details of framing members, anchoring methods, clearances, hardware, and accessories.

D. Selection Samples: For each finish product specified, two complete sets of color chips representing manufacturer's full range of available colors and patterns.

E. Verification Samples: For each finish product specified, two samples, minimum size 6 inches (150 mm) long, representing actual product, color, and patterns.

F. Manufacturer's Certificates: Certify products meet or exceed specified requirements.

G. Operation and Maintenance Data: Submit lubrication requirements and frequency, and periodic adjustments required.

1.5 QUALITY ASSURANCE

A. Manufacturer Qualifications: Company specializing in performing Work of this section with a minimum of five years experience.

B. Installer Qualifications: Installer Qualifications: Company approved by manufacturer, specializing in performing Work of this section with minimum three (3) years experience, with IDEA Certified Installers and service technicians on staff.

1.6 DELIVERY, STORAGE, AND HANDLING

A. Store products in manufacturer's unopened packaging until ready for installation.

B. Protect materials from exposure to moisture. Do not deliver until after wet work is complete and dry.

C. Store materials in a dry, warm, ventilated weathertight location.

1.7 PROJECT CONDITIONS

A. Maintain environmental conditions (temperature, humidity, and ventilation) within limits recommended by manufacturer for optimum results. Do not install products under environmental conditions outside manufacturer's absolute limits.

1.8 COORDINATION

A. Coordinate Work with other operations and installation of adjacent materials to avoid damage to installed materials.

1.9 WARRANTY

A. Manufacturer’s Warranty: Provide manufacturer’s two (2) year limited warranty.

PART 2 - PRODUCTS

2.1 MANUFACTURERS

A. Acceptable Manufacturer: Overhead Door Corp., 2501 S. State Hwy. 121, Suite 200, Lewisville, TX 75067. ASD. Tel. Toll Free: (800) 275-3290. Phone: (469) 549-7100.

Fax: (972) 906-1499. Web Site: www.overheaddoor.com.
E-mail: info@overheaddoor.com.

B. Requests for substitutions will be considered in accordance with provisions of Section 01 25 00.

2.2 OVERHEAD COILING COUNTER FIRE DOORS

A. Overhead Coiling Counter Fire Doors: Model 641 Counter Fire Doors.

1. Label: Provide rolling fire doors certified with the following listing.

   a. UL 1-1/2-Hour Class B Label for installation in non-masonry walls, face mounted or between jambs. ULC 1-1/2-Hour Class B Label for installation in non-masonry walls, face mounted or between jambs.
   b. FM 60-Minute Class B Label when installed on 1-hour fire-rated CMU gypsum or wallboard walls.

2. Curtain: Interlocking slats, Type F-158 fabricated of 22 gauge stainless steel. Endlocks shall be attached to ends of alternate slats to maintain curtain alignment and prevent lateral slat movement.

3. Finish: Slats and hood shall be stainless steel with No. 4 satin finish.

4. Bottom Bar:

   a. Single stainless steel angle bottom bar.
   b. Single stainless steel angle bottom bar with 1/4 inch (6 mm) foam astragal.
   c. Tubular locking bottom bar.

5. Guides:

   a. Stainless steel shapes.
   b. Stainless steel shapes with brush smoke seals.
   c. Fastening Guides to Masonry Fire Walls: UL listed expansion anchors, or by through-bolts on soft brick or hollow block walls, or by bolts on steel jambs.
   d. Fastening Guides to Non-Masonry Fire Walls: Comply with the manufacturer's listing.

6. Brackets: Black powder coated steel to support counterbalance, curtain and hood.

7. Counterbalance: Helical torsion spring type. Counterbalance shall be housed in a steel tube or pipe barrel.

8. Hood:

   a. Galvanized painted steel. Hood support provided for wall openings over 13 feet 6 inch (4.11 m) wide.
   b. FM approved hood shall be equipped with thermally controlled, internal flame baffle.
   c. Provide with UL Listed exterior brush smoke seal.

9. Manual Operation:

    a. Manual push.
    b. Crank operation.

10. Automatic Closure:

    a. Standard Fire Door: UL approved release mechanism equipped with a 165 degree fusible link.

11. Locking

    a. Two interior bottom bar slides bolt for manually operated doors.
    b. Cylinder lock for manually operated doors.

12. Wall Mounting Condition:

    a. Face-of-wall mounting.
    b. Between jambs mounting.

13. Plastic Laminated Fire Rated Countertops: Provide counter fire doors at plastic laminated fire rated countertops.

    a. Label: Plastic laminated fire rated countertops shall bear Warnock Hersey International 1-1/2 hour label for countertops up to 8 feet by 4 feet (2.44 m by 1.22 m). Sizes over 8 feet by 4 feet (2.44 m by 1.22 m) will bear an Warnock Hersey International Oversize Label.
    b. Shape: Provide shape as indicated on the Drawings. To include: I or T copable for face mounted doors; Rectangular H (no cope), I or T copable for between mounted doors. No aprons or additional pieces shall be allowed.
    c. Core: Interior core of Georgia Pacific Firestop composite and high density particleboard.
    d. Finish: Top, bottom and all edges shall be covered with plastic laminate.
    e. Color: Top and all edges as selected by the Architect from any color from Formica, Wilsonart or Nevamar brands of plastic laminate.
    f. Mounting Hardware: Provide with all necessary mounting hardware

14. Except as otherwise indicated, provide standard metal threshold unit of type, size and profile as detailed or scheduled.

PART 3 - EXECUTION

3.1 EXAMINATION:

A. Verify opening sizes, tolerances and conditions are acceptable.

B. Examine conditions of substrates, supports, and other conditions under which this work is to be performed.

C. If substrate preparation is the responsibility of another installer, notify Architect of unsatisfactory preparation before proceeding.

3.2 PREPARATION

A. Clean surfaces thoroughly prior to installation.

B. Prepare surfaces using the methods recommended by the manufacturer for achieving the best result for the substrate under the project conditions

3.3 INSTALLATION

A. Install in accordance with manufacturer's instructions.

B. Install rolling counter fire doors in compliance with requirements of NFPA 80. Test fire-release system and reset components after testing.

C. Use anchorage devices to securely fasten assembly to wall construction and building framing without distortion or stress.

D. Securely and rigidly brace components suspended from structure. Secure guides to structural members only.

E. Fit and align assembly including hardware; level and plumb, to provide smooth operation.

F. Coordinate installation of sealants and backing materials at frame perimeter as specified in Section 07 92 00.

G. Install perimeter trim and closures

3.4 ADJUSTING

A. Test for proper operation and adjust as necessary to provide proper operation without binding or distortion.

B. Release device(s) shall be tested and witnessed for proper operation with the door manufacturer recommendations

C. Adjust hardware and operating assemblies for smooth and noiseless operation.

3.5 FIELD QUALITY CONTROL

A. Functional testing of fire door and window assemblies shall be performed by IDEA Certified personnel with knowledge and understanding of the operating components of the type of door being subject to testing.

3.6 CLEANING

A. Clean curtain and components using non-abrasive materials and methods recommended by manufacturer.

B. Remove labels and visible markings.

C. Touch-up, repair or replace damaged products before Substantial Completion

3.7 PROTECTION

A. Protect installed products until completion of project.

END OF SECTION

SECTION 08 54 13 - FIBERGLASS WINDOWS

PART 1 - GENERAL

1.1 SUMMARY

A. Section includes glazed fiberglass-framed windows.

B. Related Sections:

1. Section 07 25 00 Weather Barriers
2. Section 07 06 00 Flashing and Sheet Metal
3. Section 07 92 00 Joint Sealants

1.2 SUBMITTALS

A. Product Data: For each type of product.

B. Shop Drawings: Include plans, elevations, sections, accessories, and details of installation, including anchor, flashing, and sealant installation.

C. Samples: Color chart for selection.

1.3 WARRANTY

A. Manufacturer's Warranty: Manufacturer agrees to repair or replace fiberglass windows that fail in materials or workmanship within 10 years from date of Substantial Completion.

1.4 QUALITY ASSURANCE

A. Overall Standards: Comply with ANSI/AAMA/101/I.S.2, except where noted herein.

B. Manufacturer Qualifications:

1. Minimum 10 years experience in producing vinyl windows.
2. Member AAMA & NFRC.

C. Certifications for Insulated Glass Units:

1. Insulated glass units are certified to ASTM E2188/E2190 per the Associated Laboratories Incorporated (ALI) guidelines.

D. AAMA: Windows shall be Silver Label certified with label attached to frame per AAMA requirements.

E. NFRC: Windows shall be NFRC certified with temporary U-factor label applied to glass and an NFRC tab added to permanent AAMA frame label.

1.5 DELIVERY, STORAGE AND HANDLING

A. Comply with Manufacturer's/Dealer's ordering instructions and lead time requirements to avoid construction delays.

B. Delivery: Deliver materials in Manufacturer's standard packaging for protection of product.

C. Storage & Protection: Store products away from exposure to environmental conditions that may be harmful to materials.

D. Store materials off ground in an upright position. Provide cover from weather and construction activity.

E. Follow Manufacturer's instructions on label applied to units.

PART 2 - PRODUCTS

2.1 FIBERGLASS WINDOWS

A. Milgard Manufacturing, Tacoma, WA; Ultra Series (Basis of Design); Cascadia Windows; or approved equal.

B. Operating Types and Sizes: As shown in the drawings.

C. Frames: fiberglass complying with AAMA 305 Glass Fiber Reinforced Thermoset Profile and with exposed exterior fiberglass surfaces finished with manufacturer's standard enamel coating.

1. Exterior Color: As selected by Architect from manufacturer's full range.
2. Interior Finish: Matching exterior color and finish.

D. General Performance Requirements:

1. Products and systems provided must be manufactured, fabricated, and installed to the following performance criteria:
2. Comply with ANSI/AAMA/NWWDA 101/I.S.2, except as noted herein
3. Performance Class: LC
4. Performance Grade: 50 PSF
5. U-Factor (NFRC 100): Per WSEC, See Drawings
6. SHGC – Solar Heat Gain Coefficient (NFRC 200): Per WSEC, See Drawings

E. Structural Requirements: Products and systems provided must be capable of withstanding wind loads based on testing units representative of those indicated for Project that pass AAMA/NWWDA 101/I.S.2/NAFS, Uniform Structural Load Test:

1. Design Wind Loads: Determine design wind loads, according to ASCE, Section 6, applicable to Product from basic wind speeds (MPH) at 33 feet above grade, based upon mean roof heights indicated on Elevations/Drawings
2. Basic Wind Speed: Per Structural General Notes, See Drawings.
3. Importance Factor: Per Structural General Notes, See Drawings.
4. Exposure Category: Per Structural General Notes, See Drawings.
5. Wind Load Requirement: Per Structural General Notes, See Drawings.

F. Glass: Clear annealed glass, ASTM C 1036, Type 1, Class 1, q3.

G. Glazing System: Manufacturer's standard factory-glazing insulated Low-E system that produces weathertight seal.

H. Accessories:

1. Manufacture’s Standard insect screen at all operable units.
2. Operation hardware extension at upper operable units.

I. Fasteners: Noncorrosive and compatible with window members, trim, hardware, anchors, and other components.

1. Exposed Fasteners: Do not use exposed fasteners to greatest extent possible. For application of hardware, use fasteners that match finish hardware being fastened.

2.2 FABRICATION

A. Fabricate fiberglass windows in sizes indicated. Include a complete system for installing and anchoring windows.

B. Glaze fiberglass windows in the factory.

C. Complete fabrication, assembly, finishing, hardware application, and other work in the factory to greatest extent possible. Disassemble components only as necessary for shipment and installation. Allow for scribing, trimming, and fitting at Project site.

PART 3 - EXECUTION

3.1 INSTALLATION

A. Comply with manufacturer's written instructions.

B. Install windows level, plumb, square, true to line, without distortion, anchored securely in place to structural support, and in proper relation to wall flashing and other adjacent construction to produce weathertight construction.

C. Clean exposed surfaces immediately after installing windows. Remove excess sealants, glazing materials, dirt, and other substances.

D. Remove and replace if glass has been broken, chipped, cracked, abraded, or damaged during construction period.

END OF SECTION 085413

SECTION 08 70 00 – FINISH HARDWARE

PART 1 - GENERAL

1.1 SUMMARY

A. Finish Hardware is Bidder Designed.

B. Work under this section includes the complete finish hardware requirements for the project. Quantities listed are for the contractor's convenience only and are not guaranteed. Items not specifically mentioned, but necessary to complete the work shall be furnished, matching the items specified in quality and finish.

C. Related Sections:

1. Section 08 11 00 Metal Doors and Frames
2. Section 08 14 00 Wood Doors

1.2 QUALITY ASSURANCE

A. Product Qualification:

1. To assure a uniform high quality of materials for the project, it is intended that only specified items be furnished. Comparable products may be accepted upon prior approval of architect.
2. Hardware to be new, free of defects, blemishes and excessive play. Obtain each kind of hardware (Mechanical latch and locksets, exit devices, hinges and closers) from one manufacturer except where specified.
3. Fire-Rated opening in compliance with NFPA80. Hardware UL10C/UBC-7-2 (positive pressure) compliant for given type/size opening and degree of label. Provide proper latching hardware, non-flaming door closers, approved bearing hinges and smoke seal. Furnish openings complete.

B. Supplier Qualifications:

1. Hardware supplier will be a direct factory contract supplier who employs a certified Architectural Hardware Consultant (AHC) available at all reasonable times during the course of the work for project hardware consultation to owner, architect and contractor.
2. Supplier will be responsible for detailing, scheduling and ordering of finish hardware.
3. Conduct pre-installation conference at jobsite. Initiate and conduct with supplier, installer and related trades. Coordinate materials and techniques and sequence complex hardware items and systems installation.
4. Key Conference shall be initiated and conducted with owner to determine system, keyway(s) and structure.

C. Installer Qualifications:

1. Installer to have not less than 3 years' experience specializing in installation of work in this section. Company must maintain qualified personnel trained and experienced in installing hardware.

1.3 REFERENCES

A. NFPA80 – Fire Doors and Windows

B. NFPA101 – Life Safety Code

C. NFPA105 – Smoke and Draft Control Door Assemblies

D. ANSI A117.1 – Accessible and Usable Buildings and Facilities

1.4 SUBMITTALS

A. Hardware schedule: Submit digital copies of schedule. Organize vertically formatted schedule into Hardware Sets with index of doors and headings, indication complete designations of every item required for each door or opening. Include the following:

1. Type, style, function, size, quantity and finish of hardware items.
2. Name, part number and manufacture of each item.
3. Fastenings and other pertinent information.
4. Explanation of abbreviations, symbols and codes contained in schedule.
5. Door and frame sizes, materials and degrees of swing.

B. Product Data: Submit digital copies for each product indicated.

C. Templates: Obtain and distribute templates for doors, frames, and other works specified to be prepared for installing door hardware.

D. Wiring/Riser diagrams: As required for electric hardware indicated.

E. Maintenance Data: For each type of door hardware to include in maintenance manuals specified in Division 1.

F. Keying Schedule: Prepared by or under the supervision of supplier, after receipt of the approved finish hardware schedule, detailing Owner's final keying instructions for locks.

G. Samples: Upon request submit material samples.

1.5 DELIVERY, STORAGE, AND HANDLING

A. Deliver, store, handle and protect products to project site under provisions of Division 1 and as specified herein.

B. Tag each item or package separately, with identification related to the final Door Hardware Schedule, and include basic installation instructions with each item or package.

C. Deliver keys to Owner by registered mail.

1.6 WARRANTY

A. The finish hardware shall have a limited warranty against defects in workmanship and operation for a period of one year from date of substantial completions and the following items are as shown:

1. Closers: Ten years
2. Exit Devices: Ten years
3. Locksets: Ten years

PART 2 - PRODUCTS

2.1 MATERIAL AND FABRICATION

A. Provide all door hardware for complete work, in accordance with the drawings and as specified herein.

B. Provide items and quantities not specifically mentioned to ensure a proper and complete operational installation.

2.2 MANUFACTURERS

A. Approval of products from manufacturers indicated as “Acceptable Manufacturer” is contingent upon those products providing all functions and features and meeting all requirements of scheduled manufacturer’s product.

ITEM	ACCEPTABLE MANUFACTURERS
Hinges	McKinney, Hager, Bommer, Ives
Flush Bolts & Coordinators	Burns, DCI, Ives
Locksets & Deadlocks	Corbin-Russwin, Schlage, Dorma, Best
Exit Devices & Mullions	Corbin-Russwin, Precision, Precision
Cylinders & Keying	Corbin-Russwin, Dorma, Best
Door Closers	NortonDorma, Corbin-Russwin, Stanley Commercial
Protection Plates	Rockwood, Burns, DCI, Ives
Overhead Stops	Rixon, Dorma, Glynn-Johnson
Thresholds & Weatherstrip	Pemko, NGP, Reese, Zero International
Wall & Floor Stops	Rockwood, ABH
Silencers	Rockwood

2.3 HANGING

A. Conventional Hinges: Hinge open width minimum, but of sufficient throw to permit maximum door swing. Steel or stainless steel pins:

1. Three hinges per leaf to 7 feet, 6-inch height. Add one for each additional 30 inches in height or any fraction thereof.
1. Provide 4 ½ x 4 ½ for 1 ¾" thick doors up to 36". Provide 5 x 4 ½ on doors 36" and over.
2. Exterior outswing doors to have non removable (NRP) pins.
3. Pin tips, flat button, finish to match leaves
4. Interior doors over 36" – Heavy weight
5. Interior doors up to 36" – Standard weight

2.4 LOCKSETS, LATCHSETS, DEADBOLTS

A. Heavy Duty Cylindrical Locks

1. Provide cylindrical locks conforming to ANSI A156.2 Series 4000, Grade 1.
2. Provide locks with standard 2-3/4 inches (70 mm) backset, unless noted otherwise, with a 1/2 inch (13 mm) latch throw. Provide proper latch throw for UL listing at pairs.
3. Provide locksets with separate anti-rotation thru-bolts, and no exposed screws.
4. Provide independently operating levers with two external return spring cassettes mounted under roses to prevent lever sag.
5. Provide standard ASA strikes unless extended lip strikes are necessary to protect trim.
6. Lever Trim: Solid cast levers without plastic inserts, and wrought roses on both sides.

    a. Lever Design: ADA Compliant

B. Cylindrical Locks

1. Provide cylindrical locks conforming to ANSI A156.2 Series 4000, Grade 2.
2. Provide locks with standard 2-3/4 inches (70 mm) backset, unless noted otherwise, with a 1/2 inch (13 mm) latch throw. Provide 2-3/8 inches (60 mm) backset where noted of if door or frame detail requires. Provide proper latch throw for UL listing at pairs.
3. Provide locksets with separate anti-rotation thru-bolts, and no exposed screws. Provide levers that operate independently, and have internal return springs to prevent lever sag.
4. Provide standard ASA strikes unless extended lip strikes are necessary to protect trim.
5. Lever Trim: Solid cast levers without plastic inserts, and wrought roses on both sides.

    a. Lever Design: ADA Compliant

C. Tubular Locksets - Schlage F Series or equivalent

1. Provide tubular locks conforming to ANSI A156.2 Series 4000, Grade 2.
2. Provide locks with standard 2-3/8 inches (60 mm) adjustable to 2-3/4 inches (70 mm) backset with 1/2 inch (13 mm) latch throw. Provide 2 ¾ inches (70 mm) backset, unless 2-3/8 inches (60 mm) is required by door or frame detail, or noted otherwise.
3. Provide locksets that fit standard 2-1/8 inches (54 mm) diameter bore without use of thru-bolts.
4. Standard Rose Size: 2-1/2 inches (64 mm) in diameter.
5. Door Thickness: Locksets adjustable to fit in 1-3/8 inches (35 mm) or 1-3/4 inches (44 mm) door thickness.
6. Provide standard T-strikes unless extended lip strikes are necessary to protect trim.
7. Lever Trim: Solid cast levers without plastic inserts, and wrought roses on both sides.
8. Lever Design: ADA Compliant

D. Auxiliary Locks:

1. Provide deadbolt series conforming to ANSI/BHMA A156 and function as specified.
2. Provide deadbolts with standard 2-3/4 inches (70 mm) backset. Provide 2-3/8 inches (60 mm) where noted or if door or frame detail requires. Provide deadbolt with full 1 inch (25 mm) throw, constructed of steel alloy.
3. Provide manufacturer’s standard strike.

2.5 EXIT DEVICES

A. Panic and Fire Exit Devices

1. Provide exit devices tested to ANSI/BHMA A156.3 Grade 1, and UL listed for Panic Exit or Fire Exit Hardware.
2. Exit Devices: Touchpad type, fabricated of brass, bronze, stainless steel, or aluminum, plated to standard architectural finishes to match balance of door hardware.
3. Touchpad: Extend minimum of one half of door width. Match exit device finish or provide compatible finish. Provide compression springs in devices, latches, and outside trims or controls, tension springs also acceptable.
4. Provide manufacturer's standard strikes.
5. Provide exit devices cut to door width and height. Locate exit devices at height recommended by exit device manufacturer, allowable by governing building codes, and approved by Architect.
6. Mount mechanism case flush on face of doors, or provide spacers to fill gaps behind devices. Where glass trim or molding projects off face of door, provide glass bead kits.
7. Where lever handles are specified as outside trim for exit devices, provide heavy-duty lever trims with forged or cast escutcheon plates. Provide vandal-resistant levers that will travel to 90-degree down position when more than 35 pounds of torque are applied, and which can easily be re-set.

    a. Lever Style: Match lever style of locksets.

8. Provide UL labeled fire exit hardware for fire rated openings.

2.6 KEYS, KEYING, AND KEY CONTROL

A. See Keying Requirements in this section

2.7 CLOSERS

A. Heavy Duty Surface Closers

1. Provide door closers conforming to ANSI/BHMA A156.4 Grade 1 requirements by BHMA certified independent testing laboratory. ISO 9000 certify closers. Stamp units with date of manufacture code.
2. Provide door closers with fully hydraulic, full rack and pinion action with aluminum cylinder.
3. Closer Body: 1-1/2 inch (38 mm) diameter with 5/8 inch (16 mm) diameter heat-treated pinion journal.
4. Hydraulic Fluid: Fireproof, passing requirements of UL10C, and requiring no seasonal closer adjustment for temperatures ranging from 120 degrees F to -30 degrees F.
5. Spring Power: Continuously adjustable over full range of closer sizes, and providing reduced opening force as required by accessibility codes and standards.
6. Hydraulic Regulation: By tamper-proof, non-critical valves, with separate adjustment for latch speed, general speed, and backcheck.
7. Pressure Relief Valve (PRV) Technology: Not permitted.
8. Provide special templates, drop plates, mounting brackets, or adapters for arms as required for details, overhead stops, and other door hardware items interfering with closer mounting.

B. Surface Closers

1. Provide door closers conforming to ANSI/BHMA A156.4 Grade 1 requirements by BHMA certified independent testing laboratory.
2. Provide door closers with fully hydraulic, full rack and pinion action with aluminum cylinder.
3. Closer Body: 1-1/4 inch (32 mm) diameter, with 5/8 inch (16 mm) diameter heat-treated pinion journal.
4. Hydraulic Fluid: Fireproof, passing requirements of UL10C, and requiring no seasonal closer adjustment for temperatures ranging from 120 degrees F to -30 degrees F.
5. Spring Power: Continuously adjustable over full range of closer sizes, and providing reduced opening force as required by accessibility codes and standards.
6. Hydraulic Regulation: By tamper-proof, non-critical valves, with separate adjustment for latch speed, general speed, and backcheck.
7. Pressure Relief Valve (PRV) Technology: not permitted.
8. Provide special templates, drop plates, mounting brackets, or adapters for arms as required for details, overhead stops, and other door hardware items interfering with closer mounting.

2.8 OTHER HARDWARE

A. Door stops: Provide stops to protect walls, casework or other hardware.

1. Except as otherwise indicated, provide stops at each leaf of every swinging door leaf.
2. Where wall or floor stops are not appropriate, provide overhead holders.

B. Weatherstrip and Gasket

1. Provide continuous weather-strip gasketing on exterior doors and provide smoke, light, or sound gasketing on interior doors where indicated or scheduled.
2. Provide non-corrosive fasteners as recommended by the manufacturer for application indicated.

C. Thresholds

1. Except as otherwise indicated, provide standard metal threshold unit of type, size and profile as detailed or scheduled.

D. Silencers

1. Interior hollow metal frames, 3 for single doors, 2 for pairs of doors.

E. Kickplates

1. Four beveled edges, .050 inches minimum thickness, height and width as scheduled. Sheet-metal screws of bronze or stainless steel to match other hardware.

2.9 HARDWARE FINISH

A. Provide the following finishes unless noted differently in hardware groups:

Hinges	630 Stainless Steel Exterior (U532D), 652 Dull Chrome Interior
Locksets	626 Dull Chrome
Exit Devices	626 Dull Chrome
Closers	689 Aluminum
Kickplates	630 Stainless Steel
Other Hardware	626 Dull Chrome
Thresholds	Aluminum
Weatherstrip/Sweeps	Aluminum

2.10 KEYING REQUIREMENTS

A. All keyed cylinders shall be subject to a new masterkey system integrated with the Parish.

B. Furnish cylinders with construction cores. Following construction supply permanent keyed cores.

C. Cylinders to be furnished with visual key control with key code. Stamped on the face of the keys and marked on the back or side of the cylinders.

D. Key Quantities
   6 EA Master Keys
   10 EA Construction Keys
   3 EA Change Keys per keyed alike group

PART 3 - EXECUTION

3.1 ACCEPTABLE INSTALLERS:

A. Factory trained, certified, and carries a factory-issued card certifying that person as a “Certified Installer”. Alternative: can demonstrate suitably equivalent competence and experience.

3.2 PREPARATION

A. Ensure that walls and frames are square and plumb before hardware installation.

B. Locate hardware per SDI-100 and applicable building, fire, life-safety, accessibility, and security codes. Notify Architect of any code conflicts before ordering materials.

3.3 INSTALLATION

A. Do not install surface mounted items until finishes have been completed on substrate. Set units level, plumb and true to line and location. Adjust and reinforce attachment substrate for proper installation and operation.

B. Locate floor stops not more than 4 inches from the wall.

C. Drill pilot holes for fasteners in wood doors and/or frames.

3.4 ADJUSTING

A. Adjust and check for proper operation and function. Replace units, which cannot be adjusted to operate freely and smoothly.

B. Hardware damaged by improper installation or adjustment methods to be repaired or replaced to Owner’s satisfaction.

3.5 FOLLOW UP INSPECTION

A. Installer to provide letter of agreement to Owner that approximately 6 months after substantial completion, installer will visit project with representative of the manufacturers of the locking devices and door closers to accomplish the following:

1. Re-adjust locks and closers
2. Evaluate maintenance procedures and recommend changes or additions, and instruct Owner's personnel.
3. Identify items that have deteriorated or failed.
4. Submit written report identifying problems and likely future problems.

3.6 DEMONSTRATION

A. Demonstrate electrical, electronic and pneumatic hardware system including adjustment and maintenance procedures

3.7 PROTECTION/CLEANING

A. Cover installed hardware, protect from paint, cleaning agents, weathering, carts/barrows, etc. Remove covering materials and clean hardware just prior to substantial completion. Clean adjacent wall, frame and door surfaces soiled from installation/reinstallation process.

3.8 DOOR HARDWARE GROUPS

A. Hardware Group #01 – Doors # 101, 103, 115,

3 ea. Hinges	TA2714 4.5 x 4.5 US26D
1 ea. Storeroom Lock	ML2057 NSA 630
1 ea. Cylinder	Cylinder as Required to Match Owners Key System
1 ea. Kick Plate	K1050 10" x 2" LTDW B4E CSK US32D
1 ea. Wall Stop	409 US32D
3 ea. Silencers	608

B. Hardware Group #02 – Doors # 102,

3 ea. Hinges	TA2713 4.5 x 4.5 US32D NRP
1 ea. Storeroom Lock	ML2057 NSA 630 LC
1 ea. Cylinder	Cylinder as Required to Match Owners Key System
1 ea. Closer	PR7500 689
1 ea. Threshold	272A FHSL25
1 ea. Gasketing	S88D (Head & Jambs)
1 ea. Sweep	315CN
1 ea. Rain Drip	346C
1 ea. Pipe Stop & Holder	1804 US32D
1 ea. Latch Guard	320RKW US32D

C. Hardware Group #03 – Doors # 105, 106, 107,

3 ea. Hinges	TA2714 4.5 x 4.5 US32D (5 x 4.5 on Opening at 107)
1 ea. Lockset	ML2055 NSA 630 LC
1 ea. Cylinder	Cylinder as Required to Match Owners Key System
1 ea. Floor Stop	409 US32D
3 ea. Silencers	608

D. Hardware Group #04 – Doors # 108A, 110B, 117C, 117D,

8 ea. Hinges	TA2713 4.5 x 4.5 US32D NRP
1 ea. Exit Device	ED5470 TH957 630 M55
1 ea. Exit Device	ED5470 TH950 630 M55
1 ea. Cylinder	Cylinder as Required to Match Owners Key System
2 ea. Closer	PR7500 689
2 ea. Overhead Stop	6-X36 630
2 ea. Kick Plate	K1050 10” x 2” LTDW B4E CSK US32D
1 ea. Threshold	272A FHSL25
1 ea. Meeting Stile Seal	S772
1 ea. Gasketing	S88D (Head & Jambs)
1 ea. Sweep	315CN

E. Hardware Group #05 – Doors # 108B, 110A,

8 ea. Hinges	TA2714 4.5 x 4.5 US26D
2 ea. Exit Device	ED5470 TH950 630 M55
2 ea. Closer	PR7500 689
2 ea. Overhead Stop	6-X36 630
2 ea. Kick Plate	K1050 10” x 2” LTDW B4E CSK US32D
2 ea. Silencers	608

F. Hardware Group #06 – Doors # 111, 112,

3 ea. Hinges	TA2714 5 x 4.5 US26D
1 ea. Pull	110x70C US32D
1 ea. Push Plate	70C 4x16 US32D
1 ea. Closer	PR7500 689
1 ea. Kick Plate	K1050 10” x 2” LTDW B4E CSK US32D
1ea. Wall Stop	409 US32D
3 ea. Silencers	608

G. Hardware Group #07 – Doors # 114A,

3 ea. Hinges	TA2714 4.5 x 4.5 US32D
1 ea. Lockset	ML2055 NSA 630 LC
1 ea. Cylinder	Cylinder as Required to Match Owners Key System
1 ea. Closer	PR7500
1 ea. Kick Plate	K1050 10” x 2” LTDW B4E CSK US32D
1 ea. Floor Stop	409 US32D
3 ea. Silencers	608
1 ea. Magnetic Hold Open	(per Bidder)

H. Hardware Group #08 – Doors # 114E,

3 ea. Hinges	TA2713 4.5 x 4.5 US32D NRP
1 ea. Storeroom Lock	ML2055 NSA 630 LC
1 ea. Cylinder	Cylinder as Required to Match Owners Key System
1 ea. Closer	PR7500DA 689 (Delayed Action Closing)
1 ea. Threshold	272A FHSL25
1 ea. Gasketing	S88D (Head & Jambs)
1 ea. Sweep	315CN
1 ea. Rain Drip	346C
1 ea. Pipe Stop & Holder	1804 US32D
1 ea. Latch Guard	320RKW US32D

I. Hardware Group #09 – Doors # 116A, 116B,

6 ea. Hinges	TA2714 5 x 4.5 US26D
2 ea. Flush Bolts	555 US26D
1 ea. Dust Proof Strike	570 US26D
1 ea. Lockset	ML2055 NSA 630 LC
1 ea. Cylinder	Cylinder as Required to Match Owners Key System
2 ea. Overhead Stop	55-X26 652
2 ea. Silencers	608

J. Hardware Group #10 – Doors # 117A, 117B,

8 ea. Hinges	TA2714 4.5 x 4.5 US26D
1 ea. Exit Device	ED5470 N955 630 M55
1 ea. Exit Device	ED5470 N950 630 M55
1 ea. Cylinder	Cylinder as Required to Match Owners Key System
2 ea. Closer	PR7500 689
2 ea. Wall Stop	409 630
2 ea. Kick Plate	K1050 10” x 2” LTDW B4E CSK US32D
2 ea. Silencers	608

K. Hardware Group #11 – Doors # 117E,

8 ea. Hinges	TA2713 4.5 x 4.5 US32D NRP
1 ea. Exit Device	ED5470 TH957 630 M55
1 ea. Exit Device	ED5470 TH950 630 M55
1 ea. Cylinder	Cylinder as Required to Match Owners Key System
2 ea. Closer	PR7500 689
2 ea. Overhead Stop	6-X36 630
2 ea. Kick Plate	K1050 10” x 2” LTDW B4E CSK US32D
1 ea. Threshold	272A FHSL25
1 ea. Meeting Stile Seal	S772
1 ea. Gasketing	S88D (Head & Jambs)
1 ea. Sweep	315CN

L. Hardware Group #012 – Doors # 113, 114B

3 ea. Hinges	TA2714 4.5 x 4.5 US32D (5 x 4.5 On Openings 113 and 114B)
1 ea. Lockset	ML2055 NSA 630 LC
1 ea. Cylinder	Cylinder as Required to Match Owners Key System
1 ea. Closer	PR7500 689
1 ea. Overhead Stop	6-X36 630
1 ea. Kick Plate	K1050 10” x 2” LTDW B4E CSK US32D
3 ea. Silencers	608
1 ea. Magnetic Hold Open	(per Bidder)

M. Hardware Group #013 – Doors # 114D,

1 ea. Cylinder	Cylinder as Required to Match Owners Key System – US26D Finish
1 ea. Hardware	Balance By Door Mfg.

END OF SECTION

SECTION 08 80 00 - GLAZING

PART 1 - GENERAL

1.1 SUMMARY

A. Section Includes
   1. Glazing at interior and exterior locations
   2. Fire rated glazing

B. Related Sections
   1. 08 11 00 Metal Doors and Frames
   2. 08 14 00 Wood Doors
   3. 08 54 13 Fiberglass Windows

1.2 REFERENCES

A. ASTM International (ASTM).
   1. C 920 - "Specification for Elastomeric Joint Sealants."
   2. E2010-01: “Standard Test Method for Positive Pressure Fire Tests of Window Assemblies.”

B. Flat Glass Marketing Association (FGMA).
   1. "Sealant Manual"

C. Glazing Association of North America (GANA)
   1. “Glazing Manual”

D. International Building Code (IBC).

E. National Fenestration Rating Council (NFRC)
   1. NFRC100 “Procedure for Determining Fenestration Product U-Factors”

F. National Fire Protection Association (NFPA).
   1. NFPA 80 - "Fire Doors and Windows."
   2. NFPA 257 – “Fire Tests of Windows Assemblies”

G. Underwriters Laboratories, Inc. (UL).
   1. UL9 – “Fire Tests of Window Assemblies”

1.3 SYSTEM DESCRIPTION

A. Performance Requirements:
   1. Installed glass shall be able to withstand a wind load specified by IBC for project location.
   2. Meet Energy requirements of the Washington State Energy Code and the Drawings.

1.4 SUBMITTALS

A. Comply with requirements of Section 01 33 00.

B. Product data: Submit manufacturer's technical data for each glazing material required, including installation and maintenance instructions.

C. Certificates of compliance from glass and glazing materials manufacturers attesting that glass and glazing materials furnished for project comply with requirements. Separate certification will not be required for glazing materials bearing manufacturer's permanent label designating type and thickness of glass, provided labels represent a quality control program involving a recognized certification agency or independent testing laboratory acceptable to authority having jurisdiction.

D. Product Test Listings: From UL indicating fire-rated glass complies with requirements, based on comprehensive testing of current product.

E. Samples: Submit, for verification purposes, approx. 8-inch by 10-inch sample for each type of glass indicated.

1.5 QUALITY ASSURANCE

A. Qualifications:
1. Glass and glazing shall conform with recommendations of GANA "Glazing Manual."

B. Regulatory Requirements:
1. Glass and glazing shall conform with applicable requirements of IBC Chapter 24.
2. Tempered safety glass shall bear an identifying mark, and shall be accompanied by certification that it conforms to Federal Safety Standard 16 CFR 1201.
3. Exterior glass shall be selected to conform with applicable requirements of the Washington State Energy Code (WSEC) to suite window types, manufacturers and targeted performance requirements established for the project.

PART 2 - PRODUCTS

2.1 MATERIALS

A. Glass:
1. Manufacturer's: Use manufacturer's that are compatible with specified window systems.
2. Tempered Glass: Provide tempered glass at locations required by the International Building Code.
3. Typical interior glazing: Single pane clear float, ¼" thick, tempered.
4. Fire rated glazing: TGP Firelite, 3/16" thick. Rating to suit assembly shown on drawings.
5. Glazing at Fiberglass Windows: See specification section 08 54 13.
6. Glazing at Exterior Metal Doors: 1" clear insulating glass, low-e, argon filled, warm edge spacer. Glazing performance to meet WSEC min. U-Value.
7. Glazing at South Wall Hall windows: 1" clear insulating glazing with inner pane of laminated glass. Performance to meet WSEC minimum U-Values.

B. Glazing Materials:
   1. Types and Sizes: As recommended by glass manufacturer, unless otherwise shown or specified.
   2. Tape: Butyl rubber, Pecora Corporation "Extru-Seal Tape" G-66 and BB-50, Tremco "Tremco 440 Tape."
   3. Tape at fire rated assemblies: As recommended by fire rating glazing manufacturer.
   4. Glazing Compound and Sealant: For use in aluminum frames, non-staining types of color to match frames; for use in other frames when exposed to view, either gray or neutral color as selected.
      a. Glazing Compound: Pecora Corporation "M-242."
      b. Sealant: For butt glazing conditions only, Tremco "Proglaze", General Electric Company "Silglaze Sealant", Sonneborn "Omniglaze", silicone sealant in conformance with FS TT- S-001543A. Sealant to have V.O.C. rating of 250 g/L or less.
   5. Glazing and Sealant at fire rated assemblies: As recommended by fire rating glazing manufacturer. Sealant to have V.O.C. rating of 250 g/L or less.
   6. Setting Blocks and Spacers: Neoprene, of hardness as recommended by glass manufacturer. EPDM and silicone is permitted at fire rated glazing to suit manufacturer’s requirements. Note: test compatibility with sealant before installation.

PART 3 - EXECUTION

3.1 INSTALLATION

A. Install materials in accordance with manufacturer's instructions, recommendations of GANA, FGMA, and regulatory requirements.

B. Tolerances: Conform to manufacturer's specified limits.

C. Make exposed surfaces of glazing compounds and sealants smooth.

D. Completed exterior installations shall be watertight.

E. Attach cross streamers away from glass face. Do not apply to glass surface.

3.2 CLEANING

A. Upon completion of glazing Work, clean excess glazing compound and sealant from glass and adjacent surfaces.

B. Leave manufacturers' labels intact and in place until time of final inspection and cleaning.

END OF SECTION

SECTION 08 90 00 - LOUVERS AND VENTS

PART 1 - GENERAL

1.1 SUBMITTALS

A. Manufacturer's information on materials, fabrication, finishes, and installation.

B. Shop Drawings showing details of fabrication and installation.

1.2 DELIVERY, STORAGE, AND HANDLING

A. Deliver, store, and handle in accordance with manufacturer's instructions.

PART 2 - PRODUCTS

2.1 MATERIALS

A. Stationary Louvers: The Airolite Company, Model K609; or approved equal; extruded aluminum, Alloy 6063-T5, louver depth 4 inches.
   1. Frame: 0.081" ((2.06 mm).
   2. Blades: 0.081" (2.06 mm), positioned at 45 degree angle, spaced 5 inches on center.
   3. Birdscreen: 1/2 inch by 1/2 inch mesh, 19 gage galvanized, in removable frame, mounted on inside.
   4. Finish: Manufacturer's standard Kynar coating in color as selected.
   5. Sizes as shown.
   6. Provide sheet metal closure behind louvers in areas beyond metal duct interface.

B. Custom Stationary Louvers: Construction Specialties; Industrial Louvers, Inc. or approved equal, extruded aluminum, louver depth 4 inches.
   1. Frame: 0.081" ((2.06 mm).
   2. Blades: 0.081" (2.06 mm), positioned at 45 degree angle, spaced 5 inches on center.
   3. Birdscreen: 1/2 inch by 1/2 inch mesh, 19 gage galvanized, in removable frame, mounted on inside.
   4. Finish: Manufacturer's standard Kynar coating in color as selected.
   5. Sizes as shown.
   6. Provide sheet metal closure behind louvers in areas beyond metal duct interface.

PART 3 - EXECUTION

3.1 EXAMINATION

A. Verify that openings to receive louvers are satisfactory for their installation.

3.2 INSTALLATION

A. Install plumb and true in accordance with manufacturer's instructions, reviewed Shop Drawings, and as shown and specified.

B. Apply continuous bead of sealant around exterior frames. Sealant is specified in Section 07 92 00.

END OF SECTION

SECTION 09 22 16 – NON-STRUCTURAL METAL STUD FRAMING

PART 1 - GENERAL

1.1 SUMMARY

A. Provide metal framing components as part of shown assemblies.

B. Related Sections.
   1. Section 09 29 00 – Gypsum Board.

1.2 REFERENCES

A. ASTM International (ASTM).
   1. A 653 - "Specification for Steel Sheet, Zinc-Coated (Galvanized) or Zinc-Iron Alloy-Coated (Galvannealed) by the Hot-Dip Process."
   2. A 1011 - "Specification for High Strength Steel Castings in Heavy Sections."
   3. C 645 - "Specification for Non-Load (Axial) Bearing Steel Studs, Runners (Tracks), and Rigid Furring Channels for Screw Application of Gypsum Board."
   4. C 754 - "Specification for Installation of Steel Framing Members to Receive Screw-Attached Gypsum Panel Products."

B. American Welding Society (AWS).
   1. D1.3 - "Specification for Welding Sheet Steel in Structures."

C. Steel Stud Manufacturers Association (SSMA).
   1. "Specification for Metal Lath and Furring."

1.3 SYSTEM DESCRIPTION

A. Steel Stud Materials
   1. Provide all non-structural framing members, unless otherwise indicated, of gage thickness as determined by supplier/installer based on design performance calculations for each applicable wall condition, except no lighter than 20 gage. All furring, backing and/or blocking shall be 16 gage unless otherwise noted.
   2. Form all framing members 16 gage and heavier from steel corresponding to ASTM A1011, Grade 50, with minimum yield of 50,000 psi.
   3. Form all 18 gage and lighter framing members, including track, bridging, end closures and accessories from steel corresponding to ASTM A 653, Grade A, minimum yield of 33,000 psi.
   4. Form all framing members including accessories from steel having G-60 galvanized or A-60 galvannealed coating.

PART 2 - PRODUCTS

2.1 MATERIALS

A. All supplied by one manufacturer, U.S. Gypsum Co., Western Metal Lath, Angeles Metal System unless otherwise specified.

B. Materials shall comply with ASTM C 645.

C. Metal Studs: 20 gage minimum galvanized steel, non- bearing, with punched webs and perforated flanges to receive screws.

D. Wide Flange Studs if required: 16 gage steel, with punched webs and perforated flanges to receive screws; paint with rust inhibitive primer.

E. C-Studs: 16 gage galvanized steel, with punched webs and perforated flanges to receive screws.

F. Resilient Channels: USG, RC-1; or approved; 25 gage corrosion resistant steel.

G. Runner Tracks: 16 gage galvanized steel, un-punched.

H. Backing Plates: Steel sheet or plate of gages or thickness required or scheduled, galvanized or painted with rust inhibitive primer.

I. Channels: 16 gage steel, 3/4 inch furring channels and 1-1/2 inch runner channels, painted.

J. Metal Furring: Roll formed 25 gage galvanized steel, hat shaped channels.

K. Fasteners: To suit stud, track, or channel gage.
   1. Sheet Metal Screws:
      a. 3/8 inch Type S pan head for fastening 25 gage material.
      b. 1/2 inch Type S-16 pan head cadmium plated for fastening wide flange studs to door frame clips, and similar 16 gage material.
   2. Powder-Actuated Devices: 1/4 inch diameter with 1-1/2 inch concrete penetration as specified in Section 05 50 00.
   3. Concrete Nails: Case hardened stub nails 3/4 inch long.

L. Wire:
   1. 18 gage soft annealed galvanized steel tie wire.
   2. 10 gage soft annealed galvanized steel hanger wire.
   3. 8 gage soft annealed galvanized steel hanger wire.

M. Welding Electrodes: AWS low hydrogen type, as required.

N. Miscellaneous Accessories: Manufacturer's standard, suitable for the intended use.

O. Shaft Wall: Manufacturer’s standard to suit rated shaft wall construction.

PART 3 - EXECUTION

3.1 INSTALLATION

A. Install Work in accordance with applicable requirements of SSMA, AWS, and ASTM C 754. Select appropriate stud sizes, connections, and bracing for a design basis of 5 PSF lateral load and a deflection limit of L/240.

B. Limit tolerance for bow and alignment to 1/8 inch in 10 feet.

C. Use C Studs for exterior walls supporting lath and plaster.

D. Use 16 gague studs at partitions supporting ceramic tile, plywood, at electric panels, backing plates, fire extinguisher cabinets, and free ends of partitions.

E. Use metal studs at interior partition framing supporting gypsum board not requiring wide flange studs.

F. Use 16 gauge studs at heads and jambs of door frames and at borrowed light openings. Stiffen as shown.

G. Furred Spaces: Provide metal furring or furring channels at 16 inch centers vertically or as shown. Fasten at top and bottom, and tie to horizontal furring channels at 4 foot centers. Fasten furring brackets to concrete with powder actuated devices, [concrete nails].

H. Partition Stiffeners: Provide horizontal furring channel stiffeners at 5 foot centers maximum vertically at all metal studs in interior partitions.

I. Provide backing plates as scheduled and detailed, of sufficient length to fasten each end to metal framing. Provide backing plate support for each point of fastening of any unit to be anchored.

J. Fasten runner tracks at 2 foot intervals and 6 inches from ends.
   1. To Concrete Slab: With powder actuated devices [concrete nails].
   2. To Steel Framing: By welding, or by approved mechanical fastener.
   3. To Wood Framing: With concrete nails.

K. Secure studs to runner tracks with sheet metal screws to suit stud gage.

L. Provide welded, bolted, or screwed connections as shown or required.

M. Partition Bracing: For partitions exceeding 10 feet in length NOT connected to structure above provide two 10 gage wires or C-Stud diagonals, one each way perpendicular to plane of partition, at 10 foot centers maximum. Splay at 45 degrees vertically. If using stud bracing, provide deflection clips at structure.

N. Install accessories and miscellaneous specialties to plumb, true, and level lines, including other materials furnished and located as part of the Work of other Sections.

O. Ceiling Furring for GWB Ceilings:
   1. Space hanger wires at 4 feet maximum centers connected to structural framing with 3/8 inch by 3 inch long tie wire screw eyes. Space runner channels at 4 foot centers and saddle tie hanger wire top and bottom with 2 loops secured with no less than 3 turns around itself.
   2. Provide hangers within 6 inches of ends of runner channels. Provide runner channels within 6 inches of walls and partitions to support ends of metal furring.
   3. Lay out runner channels transverse to direction of joists where spacings permit.
   4. Space metal furring for gypsum board at 16 inch centers. Saddle tie to runner channels with 2 loops of tie wire secured with no less than 3 turns around itself.

END OF SECTION

SECTION 09 24 00 - CEMENT PLASTERING

PART 1 - GENERAL

1.1 SUMMARY

A. Section Includes:

1. Exterior vertical plasterwork (stucco).
2. Exterior horizontal and nonvertical plasterwork (stucco).
3. Shop Drawing: verify all proposed control joints and interface details to other materials.

1.2 SUBMITTALS

A. Product Data: For each type of product.

B. Samples: For each type of factory-prepared finish coat and for each color and texture specified.

PART 2 - PRODUCTS

2.1 PERFORMANCE REQUIREMENTS

A. Fire-Resistance Ratings: Where indicated, provide cement plaster assemblies identical to those of assemblies tested for fire resistance according to ASTM E119 by a qualified testing agency.

2.2 METAL LATH

A. Expanded-Metal Lath: ASTM C847, cold-rolled carbon-steel sheet with ASTM A653/A653M, G60 (Z180), hot-dip galvanized-zinc coating.

1. Manufacturers:
   a. Cemco; 800-775-2362, cemcosteel.com
   b. ClarkDietrich; 513-870-1100, clarkdietrich.com
   c. Phillips Manufacturing; 800-822-5055, phillipsmfg.com
   d. MarinoWARE; 800-627-4661, marinware.com

B. Paper Backing: FS UU-B-790a, Type I, Grade D, Style 2 vapor-permeable paper or Grade B, Style 1a vapor-retardant paper.

1. Provide paper-backed lath unless otherwise indicated.

2.3 ACCESSORIES

A. General: Comply with ASTM C1063, and coordinate depth of trim and accessories with thicknesses and number of plaster coats required.

B. Metal Accessories:

1. Manufacturers:
   a. Cemco; 800-775-2362, cemcosteel.com
   b. ClarkDietrich; 513-870-1100, clarkdietrich.com
   c. Phillips Manufacturing; 800-822-5055, phillipsmfg.com
   d. MarinoWARE; 800-627-4661, marinware.com
   e. Brand X Metals; 888-856-5434, brandxmetals.com
2. Foundation Weep Screed: Fabricated from hot-dip galvanized-steel sheet, ASTM A653/A653M, G60 (Z180) zinc coating.
3. Cornerite: Fabricated from metal lath with ASTM A653/A653M, G60 (Z180), hot-dip galvanized-zinc coating.
4. External- (Outside-) Corner Reinforcement: Fabricated from metal lath with ASTM A653/A653M, G60 (Z180), hot-dip galvanized-zinc coating.
5. Cornerbeads: Fabricated from zinc or zinc-coated (galvanized) steel.

   a. Smallnose cornerbead with expanded flanges; use unless otherwise indicated.
   b. Smallnose cornerbead with perforated flanges; use on curved corners.
   c. Smallnose cornerbead with expanded flanges reinforced by perforated stiffening rib; use on columns and for finishing unit masonry corners.
   d. Bullnose cornerbead, radius 3/4 inch (19 mm) minimum, with expanded flanges; use at locations indicated on Drawings.

6. Casing Beads: Fabricated from zinc or zinc-coated (galvanized) steel.; square-edged style; with expanded flanges.
7. Control Joints: Fabricated from zinc or zinc-coated (galvanized) steel.; one-piece-type, folded pair of unperforated screeds in M-shaped configuration; with perforated flanges and removable protective tape on plaster face of control joint.
8. Expansion Joints: Fabricated from zinc or zinc-coated (galvanized) steel.; folded pair of unperforated screeds in M-shaped configuration; with expanded flanges.
9. Two-Piece Expansion Joints: Fabricated from zinc or zinc-coated (galvanized) steel.; formed to produce slip-joint and square-edged reveal that is adjustable from 1/4 to 5/8 inch (6 to 16 mm) wide; with perforated flanges.

C. Plastic Accessories: Manufactured from high-impact PVC.

1. Manufacturers:
   a. Phillips Manufacturing; 800-822-5055, phillipsmfg.com
   b. Vinyl Corp (division of ClarkDietrich); 800-648-4695, vinylcorp.com
   c. Plastic Components, Inc; 800-327-7077, plasticcomponents.com
   d. Alabama Metal Industries, 800-366-2642, amicoglobal.com
2. Cornerbeads: With perforated flanges.

   a. Smallnose cornerbead; use unless otherwise indicated.

b. Bullnose cornerbead, radius 3/4-inch (19-mm) minimum; use at locations indicated on Drawings.

3. Casing Beads: With perforated flanges in depth required to suit plaster bases indicated and flange length required to suit applications indicated.

   a. Square-edge style; use unless otherwise indicated.
   b. Bullnose style, radius 3/4-inch (19-mm) minimum; use at locations indicated on Drawings.

4. Control Joints: One-piece-type, folded pair of unperforated screeds in M-shaped configuration; with perforated flanges and removable protective tape on plaster face of control joint.
5. Expansion Joints: Two-piece type, formed to produce slip-joint and square-edged 1/2-inch- (13-mm-) wide reveal; with perforated concealed flanges.

2.4 MISCELLANEOUS MATERIALS

A. Water for Mixing and Finishing Plaster: Potable and free of substances capable of affecting plaster set or of damaging plaster, lath, or accessories.

B. Fiber for Base Coat: Alkaline-resistant glass or polypropylene fibers, 1/2 inch (13 mm) long, free of contaminants, manufactured for use in cement plaster.

C. Bonding Compound: ASTM C932.

D. Fasteners for Attaching Metal Lath to Substrates: ASTM C1063.

E. Wire: ASTM A641/A641M, Class 1 zinc coating, soft temper, not less than 0.0475-inch (1.21-mm) diameter unless otherwise indicated.

F. Sound-Attenuation Blankets: ASTM C665, Type I (blankets without membrane facing) produced by combining thermosetting resins with mineral fibers manufactured from glass, slag wool, or rock wool.

   1. Fire-Resistance-Rated Assemblies: Comply with mineral-fiber requirements of assembly.

2.5 PLASTER MATERIALS

A. Portland Cement: ASTM C150/C150M, Type I.

   1. Color for Finish Coats: Gray.

B. Masonry Cement: ASTM C91, Type N.

   1. Color for Finish Coats: Gray.

C. Plastic Cement: ASTM C1328.

D. Colorants for Job-Mixed Finish Coats: Colorfast mineral pigments that produce finish plaster color to match Architect's sample.

E. Lime: ASTM C206, Type S; or ASTM C207, Type S.

F. Sand Aggregate: ASTM C897.

1. Color for Job-Mixed Finish Coats: In color matching Architect's sample.

G. Perlite Aggregate: ASTM C35.

H. Acrylic-Based Finish Coatings: Factory-mixed acrylic-emulsion coating systems formulated with colorfast mineral pigments and fine aggregates; for use over cement plaster base coats. Include manufacturer's recommended primers and sealing topcoats for acrylic-based finishes.

1. Manufacturers:
   a. Elrey Stucco Solutions; 866-516-0061, elrey.com
   b. Omega Products International; 800-600-6634, omega-products.com
   c. Stuc-o-Flex International, Inc.; 800-305-1045, stucoflex.com.
2. Color: As selected by Architect from manufacturer's full range.

2.6 PLASTER MIXES

A. General: Comply with ASTM C926 for applications indicated.

1. Fiber Content: Add fiber to base-coat mixes after ingredients have mixed at least two minutes. Comply with fiber manufacturer's written instructions for fiber quantities in mixes, but do not exceed 1 lb of fiber/cu. yd. (0.6 kg of fiber/cu. m) of cementitious materials.

B. Base-Coat Mixes for Use over Metal Lath: Scratch and brown coats for three-coat plasterwork as follows:

1. Portland Cement Mixes:

   a. Scratch Coat: For cementitious material, mix 1 part portland cement and 0 to 3/4 parts lime. Use 2-1/2 to 4 parts aggregate per part of cementitious material.
   b. Brown Coat: For cementitious material, mix 1 part portland cement and 0 to 3/4 parts lime. Use 3 to 5 parts aggregate per part of cementitious material, but not less than volume of aggregate used in scratch coat.

2. Masonry Cement Mixes:

   a. Scratch Coat: Mix 1 part masonry cement and 2-1/2 to 4 parts aggregate.
   b. Brown Coat: Mix 1 part masonry cement and 3 to 5 parts aggregate, but not less than volume of aggregate used in scratch coat.

3. Portland and Masonry Cement Mixes:

a. Scratch Coat: For cementitious material, mix 1 part portland cement and 1 part masonry cement. Use 2-1/2 to 4 parts aggregate per part of cementitious material.
b. Brown Coat: For cementitious material, mix 1 part portland cement and 1 part masonry cement. Use 3 to 5 parts aggregate per part of cementitious material, but not less than volume of aggregate used in scratch coat.

4. Plastic Cement Mixes:

a. Scratch Coat: Mix 1 part plastic cement and 2-1/2 to 4 parts aggregate.
b. Brown Coat: Mix 1 part plastic cement and 3 to 5 parts aggregate, but not less than volume of aggregate used in scratch coat.

5. Portland and Plastic Cement Mixes:

a. Scratch Coat: For cementitious material, mix 1 part plastic cement and 1 part portland cement. Use 2-1/2 to 4 parts aggregate per part of cementitious material.
b. Brown Coat: For cementitious material, mix 1 part plastic cement and 1 part Portland cement. Use 3 to 5 parts aggregate per part of cementitious material, but not less than volume of aggregate used in scratch coat.

C. Job-Mixed Finish-Coat Mixes:

1. Portland Cement Mix: For cementitious materials, mix 1 part portland cement and 3/4 to 1-1/2 parts lime. Use 1-1/2 to 3 parts aggregate per part of cementitious material.
2. Masonry Cement Mix: Use 1 part masonry cement and 1-1/2 to 3 parts aggregate.
3. Portland and Masonry Cement Mix: For cementitious materials, mix 1 part Portland cement and 1 part masonry cement. Use 1-1/2 to 3 parts aggregate per part of cementitious material.
4. Plastic Cement Mix: Use 1 part plastic cement and 1-1/2 to 3 parts aggregate.

D. Factory-Prepared Finish-Coat Mixes: For acrylic-based finish coatings, comply with manufacturer's written instructions.

PART 3 - EXECUTION

3.1 INSTALLATION, GENERAL

A. Prepare smooth, solid substrates for plaster according to ASTM C926.

B. Fire-Resistance-Rated Assemblies: Install components according to requirements for design designations from listing organization and publication indicated on Drawings.

C. Sound-Attenuation Blankets: Where required, install blankets before installing lath unless blankets are readily installed after lath has been installed on one side.

3.2 INSTALLING METAL LATH

A. Metal Lath: Install according to ASTM C1063.

3.3 INSTALLING ACCESSORIES

A. Install according to ASTM C1063 and at locations indicated on Drawings.

B. Reinforcement for External (Outside) Corners:

1. Install cornerbead at exterior locations.
2. Install cornerbead at interior corner locations.

C. Control Joints: Locate as indicated on Drawings.

3.4 PLASTER APPLICATION

A. General: Comply with ASTM C926.

B. Walls; Base-Coat Mixes for Use over Metal Lath: For scratch and brown coats, for three-coat plasterwork with 3/4-inch (19-mm) total thickness, as follows:

1. Portland cement mixes.
2. Masonry cement mixes.
3. Portland and masonry cement mixes.
4. Plastic cement mixes.
5. Portland and plastic cement mixes.

C. Ceilings; Base-Coat Mixes for Use over Metal Lath: For scratch and brown coats, for three-coat plasterwork and having 1/2-inch (13-mm) total thickness, as follows:

1. Portland cement mixes.
2. Masonry cement mixes.
3. Portland and masonry cement mixes.
4. Plastic cement mixes.
5. Portland and plastic cement mixes.

D. Walls; Base-Coat Mix: For base (scratch) coat, for two-coat plasterwork and having 3/8-inch (10-mm) thickness on masonry, as follows:

1. Portland cement mix.
2. Masonry cement mix.
3. Portland and masonry cement mix.
4. Plastic cement mix.
5. Portland and plastic cement mix.

E. Ceilings; Base-Coat Mix: For base (scratch) coat, for two-coat plasterwork and having 1/4-inch (6-mm) thickness on concrete, as follows:

1. Portland cement mix.

2. Masonry cement mix.
3. Portland and masonry cement mix.
4. Plastic cement mix.
5. Portland and plastic cement mix.

F. Plaster Finish Coats: Apply to provide brocade (knock-down dash) and sacked (California mission) finishes to match Architect's sample.

G. Acrylic-Based Finish Coatings: Apply coating system, including primers, finish coats, and sealing topcoats, according to manufacturer's written instructions.

H. Concealed Exterior Plasterwork: Where plaster application is used as a base for adhered finishes, omit finish coat.

I. Concealed Interior Plasterwork:

1. Where plaster application is concealed behind built-in cabinets, similar furnishings, and equipment, apply finish coat.
2. Where plaster application is concealed above suspended ceilings and in similar locations, omit finish coat.
3. Where plaster application is used as a base for adhesive application of tile and similar finishes, omit finish coat.

3.5 PLASTER REPAIRS

A. Repair or replace work to eliminate cracks, dents, blisters, buckles, crazing and check cracking, dry outs, efflorescence, sweat outs, and similar defects and where bond to substrate has failed.

END OF SECTION 092400

SECTION 09 28 43 – GYPSUM SHEATHING

PART 1 - GENERAL

1.1 SUMMARY

A. Section Includes:
   1. Non-paper surfaced exterior gypsum sheathing.

1.2 SUBMITTALS

A. Product Data: For each type of product indicated.

1.3 DELIVERY, STORAGE, AND HANDLING

A. Store materials protected against damage from weather, direct sunlight, surface contamination, corrosion, construction traffic, or other causes.

B. Stack sheathing flat on leveled supports off the ground, under cover, and fully protected from weather.

PART 2 - PRODUCTS

2.1 MATERIALS

A. Glass-Mat Gypsum Sheathing Board: ASTM C 1177/C 1177M; "Dens-Glass Gold" by G-P Gypsum Corporation or approved equal.

B. Type and Thickness: 5/8 inch thick Type X.

C. Size: 48 by 96 inches.

2.2 ACCESSORY MATERIALS

A. Fasteners: Self drilling, self tapping; pan head; length recommended by sheathing manufacturer for thickness of sheathing board to be attached and type of framing, with organic-polymer or other corrosion-protective coating having a salt-spray resistance of more than 800 hours according to ASTM B 117.

B. Primer: As recommended by manufacturer for substrates applied to.

PART 3 - EXECUTION

3.1 EXAMINATION

A. Prior to starting work, carefully inspect installed work of other trades and verify that such work is complete to the point where work of this Section may properly commence.

B. Do not begin installation until all unsatisfactory conditions are resolved.

C. Verify that framing is ready for installation of sheathing.

3.2 GYPSUM SHEATHING INSTALLATION

A. Comply with GA-253 and manufacturer's written instructions.

B. Install square edge boards perpendicular to framing. Apply sheathing with joints staggered. All edges shall be firmly supported.

C. Install glass mat gypsum sheathing with glass mat facing towards exterior.

D. Screw to framing. Space fasteners 8 inches o.c. in field and 4 inches o.c. at ends along each framing member.

E. Do not bridge movement joints.

F. If scheduling requirements prevent timely installation of the cladding systems, provide temporary covering of the sheathing as necessary to maintain the manufacturer's warranty.

END OF SECTION

SECTION 09 29 00 – GYPSUM BOARD

PART 1 - GENERAL

1.1 SUMMARY

A. Provide all gypsum board and acoustical insulation Work shown and specified.

B. Related Sections:
1. 07 92 00 – Joint Sealants.
2. 09 28 43 – Gypsum Sheathing.

1.2 REFERENCES

A. ASTM International (ASTM).
1. A 653 - "Specification for Steel Sheet, Zinc-Coated (Galvanized) or Zinc-Iron Alloy-Coated (Galvannealed) by the Hot-Dip Process."
2. B 633 - "Specification for Electrodeposited Coatings of Zinc on Iron and Steel."
3. C 475 - "Specification for Joint Compound and Joint Tape for Finishing Gypsum Board."
4. C 665 - "Specification for Mineral Fiber Blanket Thermal Insulation for Light Frame Construction and Manufactured Housing."
5. C 1396 - "Specification for Gypsum Board."
6. E 497 - "Practice for Installing Sound-Isolating Lightweight Partitions."

B. Gypsum Association (GA).
1. GA 216 - "Recommended Specifications for the Application and Finishing of Gypsum Board."

C. International Building Code (IBC).

D. Northwest Wall and Ceiling Bureau (NWCB).

E. Underwriters Laboratories, Inc. (UL).

F. South Coast Air Quality Management District (SCAQMD)
1. Rule 1168 – Low / No VOC Adhesives and Caulks
   a. Maximum allowed VOC Levels (G/L) as indicated

VOC Limit Product Type	G/L
Drywall and Panel Adhesives	50
Multipurpose Construction Adhesives	70
Architectural Sealants, Including Caulk	250

1.3 QUALITY ASSURANCE

A. Regulatory Requirements:
1. Comply with IBC Chapters 7 and 25.
2. Rated gypsum board shall be in conformance with UL fire resistance and fire hazard classifications.

1.4 DELIVERY, STORAGE, AND HANDLING

A. Noise Barrier Batts shall be kept dry during shipping, storage, and handling.

PART 2 - PRODUCTS

2.1 MATERIALS

A. General: All materials shall be supplied by one manufacturer. United States Gypsum, CertainTeed, Georgia-Pacific, Gold Bond.

B. Gypsum Board: Conform with requirements of ASTM C 1396, grade manufactured for finished wall surfaces with tapered longitudinal edges. Furnish in 48 inch widths and lengths which will result in a minimum footage of joints.
   1. Type X, 5/8 inch thick, where indicated on drawings where indicated on drawings.
   2. USG FiberRock Aquatough AR or approved equal, 5/8 inch thick, at all Restrooms, Kitchen, fire sprinkler room, water service room, and Janitor's closets. Use Type X where indicated in drawings.
   3. 1" thick fire rated shaftwall.

C. Gypsum Board Accessories:
   1. Screws:
      a. Wood Framing: Type W, 1-1/4 inch long.
   2. Corner Bead: Fine mesh expanded steel wing type, zinc coated in conformance with ASTM A 653 G90 coating designation, or ASTM B 633.
   3. Control Joint: Steel, perforated wing type, with single bead, zinc coated in conformance with ASTM A 653 G90 coating designation, or ASTM B 633.
   4. Metal Trim: Steel, of configuration and size as shown or required, zinc coated in conformance with ASTM A 653, G90 coating designation, or ASTM B 633.

D. Joint Treatment: Joint tape and joint compound for embedding and finishing shall be products of one manufacturer and in conformance with ASTM C 475.

E. Adhesive: As recommended by gypsum board manufacturer.

F. Waterproof Sealer: In accordance with gypsum board manufacturer's recommendations.

G. Acoustical Insulation: Owens-Corning Fiberglas Corporation, Noise Barrier Batts, ASTM C 665, 3 -1/2 inches thick.

PART 3 - EXECUTION

3.1 EXAMINATION

A. Verify that framing is accurately spaced and aligned. Correct framing members out of alignment, bowed or warped, to provide true, plumb surfaces before applying gypsum board.

3.2 INSTALLATION

A. Install materials in accordance with GA 216, manufacturer's instructions, requirements of regulatory agencies, and as shown or approved equal. Comply with Adhesives per SCAQMD standards.

B. Apply gypsum board first to ceilings and then to partitions. Apply vertically to partitions. Joints on opposite sides of same partition shall occur on different studs. Install gypsum board in moderate contact, not forced into place.

C. Apply gypsum board as close as possible to floor surface to provide full backing for resilient base. If floor level is inconsistent, creating voids greater than 1/4 inch, mud in voids to align flush with face of gypsum board.

D. Attach gypsum board to framed panel edges and intermediate supports with screws at 12 inches on center for ceilings, and 16 inches on center for partitions.

E. Accessories: Provide corner beads at vertical and horizontal external corners. Provide metal trim where gypsum board abuts partition or ceiling of dissimilar construction.

F. Acoustical Partitions:
   1. Friction fit noise barrier batts in place until interior finish is applied. In areas where noise barrier batt insulation will be applied in heights over 8 feet, provide supplementary support until interior finish is applied. Carefully fit insulation around outlets, junction boxes, and other irregularities.
   2. Install gypsum board 1/4 to 3/8 inch above floor and fill resultant space with acoustical sealer.
   3. Provide a minimum clearance of 1/4 inch along perimeters of penetrations; fill resultant space with acoustical sealer.
   4. Achieve maximum sound insulation through careful installation in jointing, sealing, taping, and staggering of joints. Conform with ASTM E 497.

G. Finishing:
   1. Provide taping and finishing using proper hand tools such as broad knives or trowels with straight and true edges or mechanical tools designed for this purpose.
   2. Seal all screw heads at WR gypsum board with waterproof sealer.
   3. Apply joint compound at all joints, fasteners, and metal trim in accordance with GA 216, and NWCB Finish Level 4.
   4. Reinforce all joints, corner beads and metal trim with tape. Center all tape on joint and seat in joint compound. Apply skim coat to cover tape. Allow tape to dry before second coat is applied.
   5. Apply second coat of joint compound over embedding coat, cover tape and feather 2 inches beyond edges leaving joint flush.
   6. When second coat is dry apply third thin coat of finishing compound feathered 2 inches beyond second coat.
   7. Finish all nail, screw depressions, gouges, and scratches with 3 coats of joint compound. Leave surface of gypsum board flush, smooth, and free of tool marks and ridges.

8. Fire tape only, all gypsum board surfaces in ceiling plenums. Finish all other gypsum board surfaces in accordance with manufacturer's recommendations.
9. Sand finish coat when dry to leave surface flush, smooth, and ready for painting specified in section 09 90 00.

H. With final application of joint compound and sanding, leave gypsum board surfaces uniformly smooth to comply with NWCB Finish Level 4. Provide light dash texture finish for all exposed gypsum board.

I. Prime paint gypsum board, with latex primer-sealer specified in Section 09 90 00, before and after application of texture coat.

END OF SECTION

SECTION 09 51 00 – ACOUSTICAL CEILINGS

PART 1 - GENERAL

1.1 SUMMARY

A. Work Includes:
1. Installation of suspension system grid and acoustical tiles.

1.2 REFERENCES

A. American Society for Testing and Materials (ASTM).
1. C 423 - "Test Method for Sound Absorption and Sound Absorption Coefficients by the Reverberation room Method."
2. C636 – “Standard Specification for the manufacture, performance, and testing of Metal Suspension Systems for Acoustical Tile and Lay-in Panel Ceilings.”
3. E 84 - "Test Method for Surface Burning Characteristics of Building Materials."

B. Federal Specifications (FS).
1. SS-S-118B - "Sound Controlling (Acoustical) Tiles and Panels."

1.3 SUBMITTALS

A. Product Data: Submit manufacturer’s technical data for each type of acoustical ceiling unit required. Include installation information for tile and adhesive.

1.4 DELIVERY, STORAGE, AND HANDLING

A. Deliver acoustical ceiling units to project site in original, unopened packages and store them in a fully enclosed space where they will be protected against damage from moisture, direct sunlight, surface contamination, and other causes.

B. Before installing acoustical ceiling units, permit them to reach room temperature and a stabilized moisture content.

C. Handle acoustical ceiling units carefully to avoid chipping edges or damaged units in any way.

1.5 WARRANTY

A. Acoustical panel: Submit a written warranty executed by the manufacturer, agreeing to repair or replace acoustical panels that fall within the warranty period. Failures include but are not limited to: Sagging and Warping

B. Warranty Period: Manufacturer’s standard warranty; 10 years.

1.6 MAINTENANCE

A. Extra Materials: Deliver extra materials to Owner. Furnish extra materials described below that match products installed. Packaged with protective covering for storage and identified with appropriate labels.
   1. Acoustical Ceiling Units: Furnish minimum one unopened carton (40 tiles) of each tile product.

PART 2 - PRODUCTS

2.1 MANUFACTURERS

A. Specific brand names are listed as standards of quality, appearance, and utility.

2.2 MATERIALS

A. Suspension System: Chicago Metallic Corporation, 1200 System; Armstrong, Prelude XL; USG Interiors, Inc., DX System; or approved equal.
   1. General: All components shall be products of the same manufacturer.
   2. Type: 15/16 inch exposed, fire-rated, single web, direct hung, for use with 24 inch by 48 inch acoustical panels as shown.
   3. Perimeter Angles and Corner Pieces: Same material as that of suspension system.
   4. Hanger Wire and Ties: Galvanized, soft annealed mild steel wire complying with ASTM C 636, 12 gage minimum.
   5. Miscellaneous Accessories: Manufacturer's standard as required for use with suspension system provided.
   6. Finish: As selected from manufacturer's standard.

B. ACT-1 – Mineral Fiber Ceiling Panels: Manufacturer: Armstrong Cirrus Second Look II; or approved substitution; 24” x 48” by 9/16 inch thick, noncombustible mineral fiber, fire-rated, beveled tegular lay-in panels. Factory applied washable white vinyl latex paint finish. Minimum NCR of 0.65 or better.

C. ACT-2 – Cleanable Mineral Fiber Panels: Armstrong, Clean Room VL, unperforated, 24 x 48 x 15/16” thick, non-combustible square edge lay-in panels, factory applied finish.

D. ACT-3 – Direct Applied Acoustical Panels: Armstrong, Invisacoustics, #1212FP 24 x 48 x ¾” thick square edge, with factory applied paintable smooth scrim; surface mounted to ceiling GWB.

PART 3 - EXECUTION

3.1 SUSPENDED INSTALLATION

A. Layout and direction of acoustical panels as shown. Center in rooms and spaces with continuous joints, parallel to partitions. Broken or discontinuous jointing not acceptable.

B. Install acoustical panels in accordance with manufacturer's instructions.

C. Install no panel or tile less than 1/2 the width of field tile except where required for irregularly shaped areas.

D. Replace discolored, damaged, or improperly installed acoustical panel and tile units.

E. Seismic Restraints: Install in strict accordance with State defined IBC requirements. See detail on drawing set.

3.2 SURFACE MOUNTED INSTALLATION

A. Site Conditions
1. Ensure site condition relative humidity is less than 70%. Building areas to receive ceilings shall be free of construction dust and debris.
2. The area of installation, adhesive, and panels should be conditioned at 65°F or above for 48 hours prior, during, and 48 hours after the installation is complete.
3. InvisAcoustics panels attached to the deck with adhesives must be installed where the building is enclosed and the HVAC system is functioning and in continuous operations for the life of the product. All wet work (plastering, concrete, etc.) must be complete and dry.
4. These products are not recommended for exterior applications where standing water is present, or where moisture will come into direct contact with the ceiling.

B. Cleaning/Maintenance
1. Use a clean, dry, soft, white cloth to wipe off any dirt or greasy fingerprints. If this does not clean the panel, use a damp, clean, soft, white cloth or sponge with a mild detergent to wipe the panel. Remove any remaining moisture with a dry cloth.

C. Area Preparation: Surfaces must be dry and free of dust, grease, oil, dirt or any other material that may deter adhesion. If the paint is flaking or peeling it must be removed. Existing finish paint must be well-bonded and not flaking or peeling.
1. Painted Surfaces: Avoid applying to a newly painted ceiling. Glossy painted surfaces must be abraded. For painted or sealed surfaces, install a small test area and observe after 12 hours. For plaster ceilings, plaster must be painted, non-chipping, and smooth.
2. Surface Flatness: To ensure a finished installation that is level, it is recommended that the ceiling surface for attachment be free of irregularities and be level within 1/4" in 12'.

D. Drywall / Concrete / Plaster Installations
1. For drywall, concrete, and plaster installations with InvisAcousticsTM panels, reference the follow sections. The Titebond® GREENchoice Acoustical Ceiling Tile Adhesive provides a secure bond and does not require any supplemental mechanical attachment as long as these instructions are followed.

2. The Trowel Line Method (ceilings level within 1/4" in 12') Panels should have at least a 1/4"-3/8" reveal between edges. This will help alleviate slight differences in the levelness of adjacent panel faces. See Section 4.7 for more details on panel spacing.
3. Your glue lines should be 20" long and 4" wide. **NOTE:** The max distance between glue centerlines on any panel is 24". For panels whose edges may overhang, maximum allowable overhang is 7" from the centerline of glue to the edge of the panel.
4. Utilizing the trowel, ensure that the adhesive is uniformly spread to cover your specified area.
5. Once in position, push the panel against the ceiling applying even hand pressure to the board where the adhesive is located in the center first, followed immediately by the edges of the panel. By attaching the center first, you can still pivot the panel slightly left or right before adhering the edges. This ensures that the panel can be aligned correctly first before the edges are solidified into place. Avoid excessive pressure to minimize panel flexing that will disturb the previously pressed areas of adhesive and result in release of the adhesive.
6. Any slight adjustments to the panel placement should be done immediately to not weaken the adhesive bond once it has started to set. Once the panel is evenly pressed into position, the adhesive should provide an immediate bond to hold the panel in place while the adhesive sets.
7. Press a sponge float across all areas of the panel where glue was applied to ensure all glue spots and lines are properly compressed and adhere to the deck. Lastly, measure adjacent panel edges to check levelness as panels are installed; the levelness of the finish face of adjacent panels should be within 1/8" to ensure a satisfactory visual.
8. For wall installations, follow steps 1 – 6 and apply the same methods in the vertical. The bottom edge of the panel should be at least 6' from the floor to avoid damage.
   a. **NOTE:** Panel creep may occur as the glue is setting. Panels should creep no more than 1/8" during installations.
   b. InvisAcoustics Direct-Apply panels have the following requirements:
      • Glue line end to panel edge: 2" max.
      • Glue center line to panel edge: 6" max.
      • Distance between center line of the glue rows: 18" max.

3.3 CLEANING

A. Comply with manufacturer's instructions for cleaning and touch-up of minor finish damage. Remove and replace Work that cannot be successfully cleaned and repaired to permanently eliminate evidence of damage.

END OF SECTION

SECTION 09 62 40 – MODULAR ATHLETIC FLOORING

PART 1 - GENERAL

1.1 DESCRIPTION

A. Scope
   1. The complete installation of modular sports surfacing system including the interlocking suspended high-impact polypropylene copolymer tile of proprietary formulation, supportive acoustical underlayment and striping.

B. Related Work (specified in other sections)
   1. Cast-in-Place Concrete Slab – Section 03 30 00
      a. The Contractor shall furnish and install the concrete subfloors.
      b. The slab shall be steel troweled to a medium-dense finish to a tolerance of ±1/8" (3.2mm) in any 10' (3m) radius. Floor Flatness and Floor Levelness (FF and FL) numbers are not recognized. High spots shall be ground level and low spots filled with approved leveling compound.

1.2 REFERENCES

A. ASTM International (ASTM).
   1. ASTM G-21

1.3 SUBMITTALS

A. Sport Court® Response HG Specifications.

B. One sample of specified system, with actual color selections.

C. Sport Court Modular Sports Flooring Installation Guide.

D. Sport Court Modular Sports Flooring Care and Maintenance Guide.

E. Sport Court Response HG Warranty.

1.4 QUALITY ASSURANCE

A. Supplier:
   1. Manufacturer shall be ISO 9001:2008 & ISO 14001:2004 Certified to assure proper quality and environmental control.
   2. Manufacturer ideally is a Zero Waste company.
   3. Product must have factory applied urethane coating.

B. Installer
   1. The complete installation of the flooring system, as described in these specifications, shall be carried out by an experienced installer (Flooring Contractor), and the work shall be performed in accordance with current manufacturer installation instructions.
   2. Installer (Flooring Contractor) shall be liable for all matters related to installation for a period of one year after the floor has been substantially installed and completed.

3. Bidder must provide all sample tile, accessory products, and documentation.

1.5 DELIVERY, STORAGE AND HANDLING

A. Materials must be delivered in manufacturer's original, unopened and undamaged packaging with identification labels intact.

B. Store material on a clean, dry, and flat surface, protected from exposure to harmful weather conditions or possible damage.

C. Storage conditions shall be 55°F to 80°F (13°C to 27°C).

1.6 SITE CONDITIONS

A. In order to prevent damage and not void the warranty, installation of modular materials shall not commence until all other finishes and overhead mechanical trades have completed their work in the modular floor areas.

B. Permanent heat, light and ventilation shall be installed and operating during and after installation.

C. Subfloors shall be clean, dry and free from dirt, dust, oil, grease, paint, old adhesive residue, or other foreign materials.

D. Flooring installation shall not begin until the levelness of requirements of concrete subfloors have been met.

E. The installation area shall be closed to all traffic and activity for a period to be set by the flooring contractor.

F. Product shall be conditioned at temperatures between 55°F to 80°F (13°C to 27°C) and shall be maintained for 72 hours prior to, during, and 72 hours after installation.

G. Environmental Limitations
1. Comply with the Manufacturers requirements.
2. Adhere to all MSDS requirements for materials employed in the work.
3. Protect all persons from exposure to hazardous materials at all times.

H. After modular floors are installed and the game lines (if requested) painted, the area is to be closed to allow curing time for the system, typically 3-5 days. No other trades or personnel are allowed on the floor until it has been accepted by the Owner.

1.7 WARRANTY

A. The Manufacturer provides a limited warranty of fifteen (15) years on the materials it has supplied. (A copy of the full warranty, with its Terms and Exclusions shall be provided as part of the Submittal Package).

PART 2 - PRODUCTS

2.1 MATERIALS

A. The Basis-of-Design Supplier is Sport Court, Response HG, Suspended Flooring
   1. Solid-top design tiles
   2. Metric-sized: 25cm x 25cm x 12.7mm (9.842” x 9.842” x 1⁄2”).
   3. High-impact polypropylene copolymer suspended modules.
   4. 281 individual hexagonal cell support structure.
   5. Proprietary Maple or solid color in-mold foil transfer with a 4 layer factory applied, wear resistant polyurethane clear coat.
   6. The tile shall have a patented positive locking system.

B. Standard Colors: Color to be selected from standard colors and wood grain finish.

C. Color Consistency: ΔECMC < 1.0

D. Weight: 0.61 ± 0.01 lbs. (278 ± 5 grams)

E. Packaging: Product is shipped in pre-assembled sheets (2x4 tiles per sheet, 6 sheets per box).

F. Product Test Results
   1. Force Reduction (DIN 18032-2):
      0.06” (1.5mm) – 10% - 15%
      0.12” (3mm) – 20% - 25%
      0.20” (5mm) – 25% - 30%
      0.35” (7mm) – 30% - 35%
   2. Ball Rebound (DIN 18032-2):
      0.06” (1.5mm) – >95%
      0.12” (3mm) – >95%
      0.20” (5mm) – >95%
      0.35” (7mm) – >95%
   3. Flatness: 0.0” +0.029” /-0.0” (0.0mm +0.74mm /-0.0mm)
   4. Lateral ForgivenessTM: +0.045” / -0.0” (+1.14mm / -0.0mm)

G. Load Bearing Capacity: 220 psi (1.52 MPa)

H. Dynamic Load
   1. All systems must be able to show verification of passing a minimum 1,000,000 cycles in dynamic load testing with minimum 200 lbs. (91 kg) loading without deviation from flatness specification.

I. Underlayment (if selected by Owner) – Multi-purpose recycled rubber underlayment having a thickness of 0.06” (1.5mm), 0.12” (3mm), 0.20” (5mm), or 0.28” (7mm), and a Durometer of 60 ± 5 on the Shore A scale.

J. Sanitary Information
   1. Resistance to fungi (when tested in compliance with ASTM G-21 and MIL standard 810-D procedure 508.3). All basic organisms tested (ATCC #6205-11797) and were found to have zero growth.

2. Resistance to the following:
   a. Bacteria and mildew resistance
   b. Gram-positive bacterial Staphylococcus Aureus
   c. Gram-negative Klebsiella Pneumoniae
   d. Pink-staining organism
   e. STV Reticulum
   f. Surface fungi growth prior to and following leaching

K. Game Line Paint – as selected by Owner
   1. Paint - aliphatic polyurethane as supplied by Sport Court. Select from standard colors.

PART 3 - EXECUTION

3.1 INSPECTION

A. Inspect concrete slab for contamination, dryness and levelness. Report any discrepancies to the General Contractor.

B. Concrete slab shall be broom cleaned, mopped and dust free by the General Contractor.

C. Installer shall document all working conditions as specified in PART 1 –GENERAL prior to starting installation. Report any discrepancies to General Contractor

3.2 INSTALLATION

A. Underlayment – Rubber underlayment shall be unrolled and allowed to relax. All butt joints shall be properly trimmed, fitted, and seamed together with an approved all-purpose tape.

B. Floor shall be installed to pre-approved layout.

C. Minimum clearance at all vertical obstructions of 3/4 inch (19mm) is required

D. Floor surface shall be clean and dust free.

E. Game Lines
   1. Use only high quality masking tape approved by Manufacturer
   2. Lines shall be painted using Sport Court recommended aliphatic polyurethane paint.
   3. Provide game lines as indicated on drawings.
   4. Room temperature shall be >55°F (13°C) and rising during paint installation.

F. Wall Base (per Section 09 65 00) - Install cove base anchored to walls with base cement.

G. Remove all excess and waste materials from the area of work. Dispose of empty containers in accordance with federal and local statutes

END OF SECTION

SECTION 09 67 23 - RESINOUS FLOORING

PART 1 GENERAL

1.1 SUMMARY

A. Section Includes:
   1. Decorative resinous flooring systems.

1.2 ADMINISTRATIVE REQUIREMENTS

A. Preinstallation Meetings: Conduct meeting at project site.
   1. Require attendance of parties directly affecting Work of this Section, including Contractor, Architect, Installer, and manufacturer's representative. Review surface preparation, application, cleaning, protection, and coordination with other Work.

1.3 SUBMITTALS

A. Product Data: For each type of product.
   1. Include manufacturer's technical data, application instructions, and recommendations for each resinous flooring component required.

B. Samples for Verification: For each resinous flooring system required, 6 inches square, applied to a rigid backing by Installer for this Project.

C. Installer Certificates: Signed by manufacturer certifying that Installers comply with specified requirements.

D. Material Certificates: For each resinous flooring component, from manufacturer.

E. Maintenance Data: For resinous flooring to include in maintenance manuals.

1.4 QUALITY ASSURANCE

A. Installer Qualifications: An authorized representative who is trained, approved, and certified by resinous flooring manufacturer as qualified to apply resinous flooring systems indicated with experience in performing this type of work.

1.5 DELIVERY, STORAGE, AND HANDLING

A. Deliver materials in original packages and containers, with seals unbroken, bearing manufacturer's labels indicating brand name and directions for storage and mixing with other components.

1.6 FIELD CONDITIONS

A. Environmental Limitations: Comply with resinous flooring manufacturer's written instructions for substrate temperature, ambient temperature, moisture, ventilation, and other conditions affecting resinous flooring application.

B. Lighting: Provide permanent lighting or, if permanent lighting is not in place, simulate permanent lighting conditions during resinous flooring application.

C. Close spaces to traffic during resinous flooring application and for 24 hours after application unless manufacturer recommends a longer period.

PART 2 PRODUCTS

2.1 PERFORMANCE CRITERIA

A. Organic Chemical Emissions from Indoor Sources Using Environmental Chambers."

B. Flammability: Self-extinguishing according to ASTM D635.

2.2 MANUFACTURERS

A. Source Limitations: Obtain primary resinous flooring materials, including primers, resins, hardening agents, grouting coats, and topcoats, from single source from single manufacturer. Obtain secondary materials, including patching and fill material, joint sealant, and repair materials, of type and from manufacturer recommended in writing by manufacturer of primary materials.

2.3 RESINOUS FLOORING

A. Resinous Flooring System: Abrasion-, impact-, and chemical-resistant, aggregate-filled, and resin-based monolithic floor surfacing designed to produce a seamless floor and integral cove base.
   1. Basis of Design Product: Subject to compliance with requirements, provide MasterTop 1234 by BASF Construction Systems or comparable product by one of the following:
      a. Sherwin-Williams Company: General Polymers Ceramic Carpet #400 Decorative Broadcast System.
      b. Sika Corporation; Flooring: Sikafloor Quartzite Broadcast System.
      c. Stonhard, Inc.: Stonshield SLT.

B. System Characteristics:
   1. Color and Pattern: ¼" Limestone Flake.
   2. Wearing Surface: Textured for slip resistance.
   3. Overall System Thickness: 1/4 inch.
   4. Federal Agency Approvals: USDA approved for food-processing environments.

C. Primer: Type recommended by resinous flooring manufacturer for substrate and resinous flooring system indicated.
   1. Formulation Description: 100 percent solids.

D. Patching and Fill Material: Resinous product of or approved by resinous flooring manufacturer and recommended by manufacturer for application indicated.

E. Topcoats: Sealing or finish coats.
   1. Resin: Epoxy.
   2. Formulation Description: 100 percent solids.
   3. Type: Clear.
   4. Number of Coats: 2.
   5. Thickness of Coats: Nominal 1/8 inch.
   6. Finish: Manufacturer standard gloss.

7. Adhesive Strength: ASTM D 4541.
8. Moisture-Vapor Transmission: 0.4 perms per ASTM E 96.
9. Hardness, Shore D: 85 per ASTM D 2240.

F. System Chemical Resistance: Test specimens of cured resinous flooring system are unaffected when tested according to ASTM D1308 for 50 percent immersion in the following reagents for no fewer than seven days

PART 3 EXECUTION

3.1 PREPARATION

A. Prepare and clean substrates according to resinous flooring manufacturer's written instructions for substrate indicated. Provide clean, dry substrate for resinous flooring application.

B. Close off Work area with temporary walls and plastic sheeting to contain dust, debris, and fumes during application.
   1. Protect surrounding areas and surfaces not scheduled to be coated from damage during surface preparation and application of coatings.
   2. Setup and maintain venting system of exhaust fans and temporary ducting to draw fresh air from building interior and vent fumes to exterior of building away from building occupants.
   3. Temporally deactivate buildings HVAC system if necessary to prevent circulation of fumes to occupied spaces. If interior air supply is not adequate for proper ventilation, connect tented Work area to exterior air supply so as to prevent fumes from being picked up and spread inside of building.
   4. Maintain temporary partition and venting system until flooring system has set and fumes and odors have dissipated from building.

C. Existing Slab Surface Preparation: Completely remove embedded accumulations of paint, wax, sealers, toppings, hardened concrete layers, laitance, power trowel finishes, and similar surface characteristics that inhibit coating bond leaving a bare concrete surface having a profile of CSP-4 as described by International Concrete Repair Institute.
   1. Clean contaminated surfaces with appropriate degreaser, detergent, or other cleaner/surfactant followed by thoroughly rinsing with fresh water to remove accumulation prior to mechanical cleaning efforts.
   2. Accessible Concrete Floor Surfaces: Mechanically blast cleaned using a mobile steel shot dust recycling machine.
   3. Mechanically abrade floor areas inaccessible to mobile blast cleaning machines to same degree of cleanliness, soundness, and profile using vertical disc scarifier, needle guns, scabblers, or suitably effective equipment.
   4. Chip and bush hammer depressions around floor drains 1/2 inch deep at drain and transition uniformly up to existing top of slab 6 inches away from drain in every direction.
   5. Saw cut existing concrete slab 1/4 inch deep at junctures with areas of other floor finishes or exposed slab. Chip and bush hammer depressions along saw cuts that transition uniformly from 1/4 inch deep at saw cut up to existing top of slab 2 inches away on side to receive new flooring.
   6. Cracks and joints greater than 1/16 inch wide: Chisel or chip-out and remove loose or unsound concrete, opening the crack or joint to a minimum 1/2 inch by 1/2 inch.
   7. Patching areas of excessively rough, spalled, or similarly defective or unsound concrete: Chisel or chip-out concrete, exposing newly fractured aggregate throughout area to be patched. Saw-cut entire perimeter of patch area 1/4 inch deep.

8. Vacuum all traces of spent abrasives and removed matter.
9. Perform 1 bond test for every 1,000 square feet to verify adequacy of surface preparation. Make initial test after a small area has been mechanically profiled and adjust process as necessary to achieve acceptable results. Comply with the following:
   a. Mix 6 oz. of primer to be used in application with No. 10 to No. 12 mesh, dry quartz sand until an easily trowelable mixture is obtained. Add 10 percent by volume Powder Hardener and mix well. Apply palm-sized patties, 1/8 to 1/4 inch thick.
   b. After 1 hour at 68 degree F, cure patties tack-free and cool to ambient temperature of concrete. Remove patties with hammer and chisel and examine fracture or delamination plane. Attach concrete with fractured aggregate to entire underside of patty. If only laitance or a small amount of concrete is attached, or if interface between patty and substrate is tacky, further substrate preparation is required.
   c. If further surface preparation is required, repeat bond tests when completed.
   d. If no amount or method of surface preparation produces satisfactory bond tests, report conditions to Owner and manufacturer.
10. Complete installation before contamination of surface by water, dust, or other contaminants.

D. Concrete Substrates: Provide sound concrete surfaces free of laitance, glaze, efflorescence, curing compounds, form-release agents, dust, dirt, grease, oil, and other contaminants incompatible with resinous flooring.
   1. Roughen concrete substrates as follows:
      a. Shot-blast surfaces with an apparatus that abrades concrete surface, contains dispensed shot within apparatus, and recirculates shot by vacuum pickup.
      b. Comply with ASTM C811 requirements unless manufacturer's written instructions are more stringent.
   2. Repair damaged and deteriorated concrete according to resinous flooring manufacturer's written instructions.
   3. Verify that concrete substrates are dry and moisture-vapor emissions are within acceptable levels according to manufacturer's written instructions.
      a. Anhydrous Calcium Chloride Test: ASTM F1869. Proceed with application of resinous flooring only after substrates have maximum moisture-vapor-emission rate of 3 lb of water/1,000 square feet of slab area in 24 hours.
   4. Alkalinity and Adhesion Testing: Verify that concrete substrates have pH within acceptable range. Perform tests recommended by manufacturer. Proceed with application only after substrates pass testing.

E. Patching and Filling: Use patching and fill material to fill holes and depressions in substrates, and to slope flooring, according to manufacturer's written instructions.
   1. Control Joint Treatment: Treat control joints and other nonmoving substrate cracks to prevent cracks from reflecting through resinous flooring according to manufacturer's written instructions.

F. Resinous Materials: Mix components and prepare materials according to resinous flooring manufacturer's written instructions.

3.2 APPLICATION

A. Apply components of resinous flooring system according to manufacturer's written instructions to produce a uniform, monolithic wearing surface of thickness indicated.

1. Coordinate application of components to provide optimum adhesion of resinous flooring system to substrate, and optimum intercoat adhesion.
2. Cure resinous flooring components according to manufacturer's written instructions. Prevent contamination during application and curing processes.
3. Expansion and Isolation Joint Treatment: At substrate expansion and isolation joints, comply with resinous flooring manufacturer's written instructions.

B. Primer: Apply primer over prepared substrate at manufacturer's recommended spreading rate.

C. Integral Cove Base: Apply cove base mix to wall surfaces before applying flooring. Apply according to manufacturer's written instructions and details, including those for taping, mixing, priming, troweling, sanding, and topcoating of cove base. Round internal and external corners.
   1. Integral Cove Base: 6 inches high, unless indicated otherwise.

D. Topcoats: Apply topcoats in number indicated for flooring system and at spreading rates recommended in writing by manufacturer and to produce wearing surface indicated.

E. Immediately remove coatings that fall on surrounding areas and surfaces not scheduled to be coated.

3.3 REPAIR

A. Materials and Surfaces Not Scheduled to Be Coated: Repair or replace damaged materials and surfaces not scheduled to be coated.

B. Damaged Coatings: Touch-up or repair damaged coatings. Touch-up of minor damage shall be acceptable where result is not visibly different from adjacent surfaces. Recoat entire surface where touch-up result is visibly different, either in sheen, texture, or color.

C. Coating Defects: Repair according to manufacturer's instructions coatings that exhibit film characteristics or defects that would adversely affect performance or appearance of coating systems.

3.4 FIELD QUALITY CONTROL

A. Material Sampling: Owner may, at any time and any number of times during resinous flooring application, require material samples for testing for compliance with requirements.
   1. Owner will engage an independent testing agency to take samples of materials being used. Material samples will be taken, identified, sealed, and certified in presence of Contractor.
   2. Testing agency will test samples for compliance with requirements, using applicable referenced testing procedures or, if not referenced, using testing procedures listed in manufacturer's product data.
   3. If test results show applied materials do not comply with specified requirements, pay for testing, remove noncomplying materials, prepare surfaces coated with unacceptable materials, and reapply flooring materials to comply with requirements.

3.5 PROTECTION

A. Protect resinous flooring from damage and wear during the remainder of construction period. Use protective methods and materials, including temporary covering, recommended in writing by resinous flooring manufacturer.

END OF SECTION

SECTION 09 68 00 - CARPETING

PART 1 - GENERAL

1.1 SUMMARY

A. Section includes replacement of existing flooring with carpeting where indicated on drawings.

B. Related Sections:
1. Section 03 54 16: Hydraulic Underlayment
2. Section 09 65 00: Resilient Flooring.

1.2 SUBMITTALS

A. Manufacturer's Data.

B. Samples: One 12 inch square piece of each specified carpet.

C. Maintenance Materials: Two complete cartons of approximately 20 tiles each carton, for each carpet used in the project.

1.3 QUALITY ASSURANCE

A. Installer Qualifications: Installer of at least 10 projects equal in yardage to Work specified. Minimum 5 years experience.

B. South Coast Air Quality Management District (SCAQMD)
1. Rule 1168 – Low / No VOC Adhesives and Caulks
   a. Maximum allowed VOC Levels (G/L) as indicated

VOC Limit Product Type	G/L
Indoor Carpet Adhesives	50
Carpet Pad Adhesives	50
Multipurpose Construction Adhesives	70
Architectural Sealants, Including Caulk	250

PART 2 - PRODUCTS

2.1 MATERIALS

A. CPT-1 Carpet Tile:
1. Manufacturer: Shaw
2. Product Line: Diffuse and Disperse 24" x 24" modular carpet tile
3. Style: Disperse 59576
4. Color: Formations #75335.
5. Installation Pattern: Quarter Turn
6. Gauge/Weight: 1/12 / 16 oz Per Square Yard
7. Backing: ECO*Worx Tile

B. CPT-2 Carpet Tile:
1. Manufacturer: Shaw
2. Product Line: Diffuse and Disperse 24” x 24” modular carpet tile
3. Style: Disperse 59576
4. Color: Formations #75335.
5. Installation Pattern: Quarter Turn
6. Gauge/Weight: 1/12 / 16 oz Per Square Yard
7. Backing: ECO*Worx Tile

C. Walk Off Mat:
1. Manufacturer: Mats Inc.
2. Product Line: Super No 52
3. Style: 6’-7’W roll goods x ½” thick, 93 oz/sq. yd.
4. Color: to be selected
5. Material: 100%, Solution Dyed polypropylene fiber
6. Backing: Oxforce Highdensity Rubber
7. Installation Method: Glue down.

D. Adhesive: Low VOC as recommended by Manufacturer.

E. Accessories:
1. Metal Carat Edge Trim: Schluter, 3/8” Reno U, 5/16” Reno U, 3/8” Reno TK Stainless Steel “E” Type Finish.
2. Water Vapor Control System: Provide at Slab-on-Grade location per specification Section 09 96 66.

PART 3 - EXECUTION

3.1 EXAMINATION

A. Prior to start of Work inspect all surfaces, verify that surfaces are clean, dry, sound, level, and free from oil, grease, wax or other foreign matter that would impair installation.

B. Inspect and Test substrate to confirm compliance with manufacturer requirements, and per Section 09 96 66.

3.2 PREPARATION

A. Fill cracks more than 1/16 inch wide, and depressions, with crack filler per 03 54 16.

B. Seal all concrete floors located under carpet.

3.3 INSTALLATION

A. Install per manufacturer’s recommendation.

B. Install carpet within allowable temperature range recommended by manufacturer.

3.4 CLEANING

A. Remove spots and smears of cement from carpet immediately with solvent.

B. Remove rubbish, wrapping paper, selvage, and scraps less than 2 feet square or less than 8 inches in least dimension.

C. Upon completion, vacuum with commercial beater bar type vacuum cleaner. Protect from soiling and damage until acceptance by Owner.

D. After each area of carpet has been installed, protect from soiling and damage until acceptance by Owner.

END OF SECTION

SECTION 09 74 13 – WOOD WALL COVERINGS

PART 1 GENERAL

1.1 SUMMARY

A. Section Includes:
   1. Wood Wall Coverings
   2. Trim and accessories.

B. Related Sections
   1. Section 06 20 00: Finish Carpentry
   2. Divisions 22 & 23: Mechanical
   3. Divisions 26 – 28: Electrical

1.2 SYSTEM DESCRIPTION

A. Panelized Linear Wood System

B. Subsurface:
   1. Acoustical: Fiberglass backing with NRC .70 or greater.
   2. Scrim: Black.

1.3 REFERENCES

A. ASTM C 423: Standard Test Method for Sound Absorption and Sound Absorption Coefficients by the Reverberation Room Method; 1990.

B. ASTM E 84: Standard Test Method for Surface Burning Characteristics of Building Materials; 1991.

C. AWI (QSI): Architectural Woodwork Quality Standards Illustrated; 2003.

1.4 SUBMITTALS

A. Submit according to the Conditions of the Contract and Division 1 Specification section.

B. Shop Drawings: Wall elevations showing panel layout and dimensions.

C. Product Data: Manufacturer's product specifications and data as required to show compliance with Contract Documents. Include Edge details.

D. Samples: System components, including panel sample and attachment methods.

E. Manufacturer's Instructions: Include installation requirements, special procedures, and perimeter conditions requiring special attention.

1.5 QUALITY ASSURANCE

A. Installer Qualifications:
   1. Company specializing in work of this Section with minimum 3 years documented experience.
   2. Authorized installer licensed by manufacturer prior to Bid Date.

1.6 REGULATORY REQUIREMENTS

A. Conform to provisions of Division 1.

B. Fire Rating: IBC / UL Class A, tested ASTM E84, including for components.
1. Fire Hazard Classification Class A.
2. Flame Spread Rating: 0 - 25.

C. South Coast Air Quality Management District (SCAQMD)
1. Rule 1168 – Low / No VOC Adhesives and Caulks
a. Maximum allowed VOC Levels (G/L) as indicated

VOC Limit Product Type	G/L
Wood Flooring Adhesives	100
Drywall and Panel Adhesives	50
Multipurpose Construction Adhesives	70
Structural Glazing Adhesives	100
Architectural Sealants, Including Caulk	250

1.7 DELIVERY, STORAGE, AND HANDLING

A. Conform to provisions of Division 1 and manufacturer's instructions.

B. Store materials off ground and protect from dirt and dust of construction operations.

C. Handle materials in a manner that will protect them from damage and soiling.

1.8 ENVIRONMENTAL REQUIREMENTS

A. Do not install panelized linear wood systems until spaces are enclosed and weather tight, wet work in spaces is complete and dry, work at and above ceilings is complete, and ambient temperature and humidity conditions are maintained at the levels indicated for Project when occupied for its intended use.

B. Temperature Range: Between 60 degrees F and 80 degrees F.

1.9 COORDINATION

A. Conform to Division 1 for coordination with work of other Sections.

B. Division 6 for wood framing systems

C. Division 9 for gypsum board substrate

D. Division 9 for primer sealer and painting of adjacent finishes.

1.10 WARRANTY

A. Special Warranty: Manufacturer and Installer agree to repair or replace components of panalized linear wood systems that fail in performance, materials, or workmanship within specified warranty period.
   1. Failures include, but are not limited to, the following:
      a. Damaged wood.
      b. Warping of wood.
      c. Un-level installations.

B. Warranty Period: 1 years from date of Substantial Completion.

PART 2 PRODUCTS

2.1 MANUFACTURERS

A. 9Wood., specified for type and quality.
   1. Website: http://9wood.com
   2. Approved Alternate: Rulon, with Solid Beech Wood www.rulon.com

2.2 SYSTEM COMPONENTS
   1. Wood Panels: 1100 Cross Piece Grille, Series 1000 SKU 1100-08
      a. Species: Solid Hemlock (No Veneer)
      b. Member Size: ¾" x 1 3/8"
      c. Edge Profile: Square
      d. Reveal: 1/2"
      e. Members/LF: 8 Members/LF
      f. Assembly Style: Cross Piece Backer with additional rod at wall installation
      g. Panel Sizes: "1' x 8', cut in field
      h. Fire Rating: Class 1(A) Fire Rating
      i. Finish: Custom Stain for Interior Finish to match sample provided by architect.
      j. Reveal Scrim: Black reveal scrim"

PART 3 EXECUTION

3.1 EXAMINATION

A. Verify conditions ready to receive work of this Section before beginning work.

B. Do Not Begin Installation before:
   1. Building has been enclosed and is weather tight.
   2. Wet work has been completed and is dry.
   3. Painting is completed and wall base and floor covering are installed.
   4. Other work generating moisture or dust has been completed, and room is dry and clean.
   5. Adjacent and related work of other trades has been completed including ceilings, doors, and windows.
   6. Ambient temperature and humidity are in accordance with Environment Requirements specified this Section, and are continuously maintained at values indicated for final acceptance of building or occupancy of space.

3.2 PREPARATION

A. Field measured each wall area to establish exact layout of units as shown on Drawings.

3.3 INSTALLATION

A. Conform to manufacturer's instructions and provisions of Contract Documents.

B. Installation of Linear Wood in accordance with manufacturer’s installation instructions and in compliance with all local codes and regulations. Install with undamaged edges and fitted accurately to suspension system runners and edge moldings. Scribe and cut panels at borders and penetrations to provide a neat, precise fit, as required.

C. Provide mounting strips and necessary blocking at wall installation locations. Miter edges at corners to be neat and precise.

3.4 ADJUSTING

A. Inspect and correct fabric not aligned or otherwise not presenting uniform appearance as instructed by Architect.

3.5 CLEANING

A. Comply with manufacturer’s instructions for cleaning and touchup of minor finish damage. Remove and replace wood ceiling and wall components that cannot be successfully cleaned or repaired.

END OF SECTION

SECTION 09 77 13 - STRETCHED-FABRIC WALL SYSTEMS

PART 1 GENERAL

1.1 SUMMARY

A. Section Includes: Field fabricated acoustical stretched fabric wall system secured by retention clips.

B. Related Sections
1. Section 06 10 00 - Rough Carpentry
2. Section 06 20 00 - Finish Carpentry
3. Section 09 29 00 - Gypsum Board

1.2 SYSTEM DESCRIPTION

A. Stretched Fabric System: Acoustically porous fabric locked in place and wrapping edges of concealed vinyl retention channels.

B. Subsurface:
1. Acoustical: Semi-rigid fiberglass panels.
2. Tackable Acoustic: Semi- rigid fiberglass core with high density fiberglass face.

1.3 PERFORMANCE REQUIREMENTS

A. Acoustical Fabric Wall Systems - Noise Reduction Coefficient (NRC):
1. Tested ASTM C423 with Type A mounting.
2. Minimum NRC 0.80, 1 inch thick semi-rigid fiberglass, or other accepted acoustical subsurface.
3. Minimum NRC 0.95 for 2 inch thick semi-rigid fiberglass, or other accepted acoustical subsurface.

1.4 REFERENCES

A. Reference Standards: Current edition at date of Bid.

B. ASTM International (ASTM):
1. ASTM C423 - Test Method for Sound Absorption and Sound Absorptive Coefficients by the Reverberation Room Method
2. ASTM E84 - Test Method for Surface Burning Characteristics of Building Materials

C. Underwriter's Laboratory (UL):
1. UL 723 - UL Standard for Safety Test for Surface Burning Characteristics of Building Materials

1.5 SUBMITTALS

A. Submit under provisions of Section 01 33 00.

B. Shop Drawings: Wall elevations with proposed locations of fabric seams and fabric panel layout and dimensions.

C. Product Data: Manufacturer's product specifications and data as required to show compliance with Contract Documents. Include Edge details.

D. Samples: System components, including semi-rigid vinyl retention channel, fiberglass core, fiberglass facing, mineral board, attachment devices, and other system components.

E. Manufacturer's Instructions: Include installation requirements, special procedures, and perimeter conditions requiring special attention.

1.6 QUALITY ASSURANCE

A. Installer Qualifications:
1. Company specializing in work of this Section with minimum 3 years documented experience.
2. Authorized installer licensed by manufacturer prior to Bid Date.

1.7 REGULATORY REQUIREMENTS

A. Conform to provisions of Section 01 42 00.

B. Fire Rating: IBC / UL Class A, tested ASTM E84, including for components.
1. Fire Hazard Classification Class A.
2. Flame Spread Rating: 0 - 25.

1.8 DELIVERY, STORAGE, AND HANDLING

A. Conform to manufacturer's instructions for delivery, storage, and handling.

B. Store materials off ground and protect from dirt and dust of construction operations.

C. Handle materials in a manner that will protect them from damage and soiling.

1.9 ENVIRONMENTAL REQUIREMENTS

A. Do not install stretched-fabric systems until spaces are enclosed and weathertight, wet work in spaces is complete and dry, work at and above ceilings is complete, and ambient temperature and humidity conditions are maintained at the levels indicated for Project when occupied for its intended use.

B. Temperature Range: Between 60 degrees F and 80 degrees F.

C. Relative Humidity: Not more than 80 percent.

D. Lighting: Do not install stretched-fabric systems until a permanent level of lighting or a lighting level of not less than 50 foot candles is provided on surfaces to receive stretched-fabric systems.

E. Air-Quality Limitations: Protect stretched-fabric systems from exposure to airborne odors such as tobacco smoke, and install systems under conditions free from odor contamination of ambient air.

1.10 COORDINATION

A. Conform to Section 01 31 00 for coordination with work of other Sections.

B. Section 06 10 00 and 06 20 00 for wood framing systems

C. Section 09 29 00 for gypsum board substrate

1.11 WARRANTY

A. Special Warranty: Manufacturer and Installer agree to repair or replace components of stretched-fabric systems that fail in performance, materials, or workmanship within specified warranty period.
   1. Failures include, but are not limited to, the following:
      a. Acoustical performance.
      b. Fabric sagging, distorting, or releasing from panel edge.
      c. Warping of core.

B. Warranty Period: 5 years from date of Substantial Completion.

PART 2 PRODUCTS

2.1 MANUFACTURERS

A. FabricMate Systems Inc., specified for type and quality, or approved equal.
   1. Website: http://www.fabricmate.com

2.2 SYSTEM COMPONENTS

A. Retention Channels: One piece, rigid PVC, fire rated, rigid vinyl channels with pressure retention or interlocking action as framework for stretched fabric
   1. Dimensions: Depths as indicated on drawings, 3/4 inch face, 1 inch flange, and 0.055 inch thick.
   2. Profiles: As indicated on Drawings.
   3. Edge Shape: As indicated on Drawings. As accepted by Architect from manufacturer's complete selection.

B. Acoustical Substrate Backing Material:
   1. Product: FabricMate Systems; RE-Core.
      a. Thickness: ½", 1" and 2" increments, overall assembly thickness as indicated in the drawings.
      b. NRC: 1" = .75, 2"= .85. Type A mounting
      c. Flammability: ASTM E84 Class A
      d. Density: 1" = 6.8 pcf minimum.

C. Acoustically Porous Fabric Facing:
   1. 100 percent polyester, unbacked, Class A tested ASTM E84.

D. Edge Profile:
   1. Type 1: Profile FS150 1 inch high square profile front loading.

2.3 FINISHES

A. Stretched Wall Fabric Wall System:
   1. Guilford of Maine, fabric and color as selected from Manufacturer standard options.

PART 3 EXECUTION

3.1 EXAMINATION

A. Verify conditions ready to receive work of this Section before beginning work.

B. Do Not Begin Installation before:
   1. Building has been enclosed and is weathertight.
   2. Wet work has been completed and is dry.
   3. Painting is completed and wall base and floor covering are installed.
   4. Other work generating moisture or dust has been completed, and room is dry and clean.
   5. Adjacent and related work of other trades has been completed including ceilings, doors, and windows.
   6. Ambient temperature and humidity are in accordance with Environment Requirements specified this Section, and are continuously maintained at values indicated for final acceptance of building or occupancy of space.

3.2 PREPARATION

A. Field measured each wall area to establish exact layout of units as shown on Drawings.

3.3 INSTALLATION

A. Conform to manufacturer's instructions and provisions of Contract Documents.

B. Rigid Vinyl Retention Channels: Fasten to perimeters of wall areas to receive fabric.
   1. Secure in place with manufacturer's approved heavy duty, 1 inch diverging staples located at not more than 2 inches on center, or as instructed by manufacturer and approved by Architect.
   2. Install be plumb, straight and in proper alignment.
   3. Install furring behind retention channel to match thickness of panel as indicated in drawings.

C. Acoustical Semi-Rigid Fiberglass Subsurface:
   1. Install continuous and flush against edge of retention channel for tight continuous joints.
   2. Install continuous, unbroken, and flush to top of retention channel framework and back side of fabric.
   3. Install multiple layers to match overall thickness as indicated in drawings.

D. Fabric:
   1. Cut from roll to maintain sequence of pattern and direction of weave for sequential, uniform appearance.
   2. Install into jaws of rigid vinyl retention channels according to manufacturer's instructions.
   3. Stretch taught and smooth, free of wrinkles and other defects.
   4. Install fabric grain plumb, vertically and horizontally aligned.

3.4 ADJUSTING

A. Inspect and correct fabric not aligned or otherwise not presenting uniform appearance as instructed by Architect.

B. Replace fabric installations damaged or soiled during course of construction.

3.5 CLEANING

A. Clean exposed surfaces of fabric wall system. Trim and remove loose threads.

B. Remove surplus materials, rubbish, and debris resulting from installation and leave areas of installation in a neat, clean condition.

3.6 PROTECTION

A. Cover fabric wall system with drop cloth or other protective covering as approved if site conditions warrant.

END OF SECTION

SECTION 09 90 00 - PAINTING AND COATING

PART 1 - GENERAL

1.1 SUMMARY

A. Unless otherwise shown or specified paint all surfaces exposed in the finished Work.

B. Surfaces Not to be Painted: Materials with factory applied finish or integral color, hardware, finished metals, glass, plastic laminate, resilient flooring, lighting fixtures, Code-Required labels.

C. Related Sections:
   1. Section 07 19 00 – Water Repellents

1.2 REFERENCES

A. Master Painters Institute (MPI): “MPI Architectural Painting Specification Manual.”

1.3 SYSTEM DESCRIPTION

A. Performance Requirements:
   0. Flame Spread: Provide paint products conforming to the following classifications:
      a. Class A: 0 - 25.
      b. Class B: 26 - 75.
      c. Class C: 76 - 200.
   1. Provide product ratings at designated locations as follows:
      a. Enclosed Vertical Exitways, Corridors, and Other Exitways: Class A.
      b. Rooms or Other Areas: Class B.

1.4 SUBMITTALS

A. Product Data: Complete material list showing product name, number, manufacturer's name, intended use and function on the Project.

B. Samples:
   1. Except as noted below: 8-1/2 by 11 inches in size of each color and finish required, upon materials corresponding with those to be finished on the Project. Approved samples shall constitute standards for color and finish for acceptance or rejection of completed Work.
   2. Exterior Siding: Provide 3 variations of each color selected on 2’x2’ panels of siding mocked up to represent siding layout.

1.5 QUALITY ASSURANCE

A. Qualifications: Preparation and painting Work shall conform with recommended practices and quality standards of the MPI.

B. Paints and Coats shall be Low/No VOC Paints and Primers as indicated.
1.

Paint Type	Maximum VOC Limit
Coatings, Flats & Non-Flats	50 g/L
Primer or Undercoat & Sealers	100 g/L
Opaque Floor Coatings	50 g/L
Rust Preventative Coatings	100 g/L
Clear Wood Finishes	275 g/L

1.6 PROJECT CONDITIONS

A. Environmental Requirements: Comply with manufacturers' recommendations for environmental conditions under which paint and painting systems shall be applied.

B. Do not allow rags to accumulate. At the end of each day's Work remove from Site rags and papers used for painting or cleanup operations. During the day's Work keep used rags in approved closed metal containers.

1.7 MAINTENANCE

A. Extra Materials: Furnish extra stock at the rate of one gallon for each body color or type used, and one gallon of each accent color or type used.

PART 2 - PRODUCTS

2.1 MANUFACTURERS

A. Acceptable Manufacturers: Sherwin Williams – Substitutions upon approval.

2.2 MATERIALS

A. Paints: Comply with MPI and finish systems specified.

B. Putty: Conform to FS TT-P-791A(3), colored to match paint and stain finishes, as applicable.

C. Cementitious Filler: Nonshrink formulation, white Portland cement with fine silicate aggregate, zinc- oxide pigment, and reinforcing chemical binder as approved.

D. Spackling Compound: Standard gypsum board compound.

E. Unspecified materials such as turpentine, linseed oil, or mineral spirits shall be products of reputable manufacturers and as recommended by paint manufacturers.

F. Materials for Undercoats and Finish Coats: Ready mixed, and shall not be changed, except thinning of undercoats (when required), reinforcing, or coloring, all of which shall be performed in accordance with manufacturers' recommendations.

2.3 PAINTING SYSTEMS

A. General:
1. Finish systems codes specified are for MPI Premium Grade finishes unless otherwise noted.
2. Each system establishes procedure, quality, and number of coats. All coats listed are in addition to shop prime coats. Additional coat or coats will be required if system specified does not cover.
3. Specified coats for any one paint system shall be products of the same manufacturer.
4. Provide Low/No VOC interior paints and coatings per ESDS 6.1.

B. Mechanical and Electrical:
1. Exposed HVAC ducts, conduit and uncovered piping in finished spaces: MPI System No. INT. 5.3J, waterborne, 3 coats.
   One coat galvanized primer MPI #107.
   Two coats acrylic enamel #43.
2. Pipe and duct covering: MPI System No. INT. 10.1A waterborne, 4 coats.
   One coat latex primer sealer #50.
   Two coats interior latex #43.
3. Inside of ducts, visible from finished space MPI System No. INT. 5.3J, waterborne, 3 coats.
   One coat black galvanized primer MPI #107.
   Two coats flat black acrylic enamel MPI #53.
4. Exterior galvanized metal: MPI System No. EXT. 5.3B, solvent base, 3 coats.
   One coat cementitious primer MPI #107.
   Two coats exterior alkyd MPI #10.
5. Miscellaneous:
   Finish registers, grilles, exposed conduit, electrical cabinets, and similar items to match adjacent surfaces.

C. Exterior:
1. Ferrous metal, (not galvanized): MPI System No. EXT. 5.1D, solvent base, 3 coats.
   One coat alkyd metal primer MPI #107.
   Two coats alkyd MPI #10.
2. Galvanized metal: MPI System No. EXT. 5.3B, solvent base, 3 coats.
   One coat cementitious primer MPI #107.
   Two coats alkyd MPI #15 at satin locations MPI#11 at gloss locations.
3. Wood Siding and Trim: Sherwin Williams, no substitutions.
   One coat: Exterior Latex wood primer, B42W8041.
   Two coats: A-100 Exterior Latex Satin, A82 Series.
4. Cementitious Composition Board: Sherwin Williams, No substitutions.
   One coat: Loxon Concrete and Masonry Primer Sealer, A24W8300.
   Two coats: A-100 Exterior Latex Satin, A82 Series.

D. Interior: Provide for up to 4 colors, to highlight architectural features as directed, which may require one additional coat in addition to coats specified. Gloss as selected.
1. Gypsum board, typical: Sherwin Williams, 4 coats.
   Primer Pre-texture at exterior walls: Interior Latex Moisture Vapor Barrier primer #B72WI.

Primer Pre-texture at non-exterior walls: Promar 400 Zero VOC Latex Primer, B28W4600.
Primer Post-texture: Promar 400 Zero VOC Latex Primer, B28W4600.
Top 2 coats: Promar 400 Zero VOC Latex Eg-Shel, B20-4600 series.

2. Gypsum Board, Unit Kitchens, and Bathrooms: Sherwin Williams, no substitutions, 4 coats.
   Primer Pre-texture at exterior walls: Interior Latex Moisture Vapor Barrier primer #B72WI.
   Primer Pre-texture at non-exterior walls: Promar 400 Zero VOC Latex Primer, B28W4600.
   Primer Post-texture: Promar 400 Zero VOC Latex Primer, B28W4600.
   Top 2 coats: Promar 400 Zero VOC Latex Semi-Gloss B31-4600 series.
3. Exposed Wood (where paint is scheduled): Sherwin Williams, no substitutions, 3 coats.
   One coat primer: Promar 400 Zero VOC Latex Primer, B28W4600.
   Two coats: Promar 400 Zero VOC Latex Semi-Gloss B31-4600.
4. Hollow Metal Doors and Frames: MPI System No. INT. 5.1E, solvent base, 3 coats.
   One coat alkyd metal primer MPI #107.
   Two coats alkyd Pro Industrial 0 VOC, semi-gloss.
5. Ferrous Metal (Not Galvanized): MPI System No. INT. 5.1E, solvent base, 3 coats.
   One coat alkyd metal primer MPI #107.
   Two coats alkyd Pro Industrial 0 VOC, semi-gloss.
6. Galvanized Metal: MPI System No. INT. 5.3C, solvent base, 3 coats.
   One coat cementitious primer MPI #107.
   Two coats alkyd Pro Industrial 0 VOC, semi-gloss.
7. Wood Doors (where paint is scheduled): Sherwin Williams, 3 coats.
   One coat primer: Promar 400 Zero VOC Latex Primer, B28W4600.
   Two coats: Promar 400 Zero VOC Latex Semi-Gloss B31-4600 series.
8. Wood Doors to receive natural finish: MPI System No. INT. 6.3H, solvent base, 4 coats.
   One coat lacquer sanding sealer #84.
   Three coats clear lacquer #87, flat.

E. Interior Concrete Slab
   1. Base Coat Densifiber: Formula One Lithium Densifiber MP, Scofield, Sika Corporation.
   2. Floor Top Coat: Formula One Finish Coat, Scofield, Sika Corporation.

PART 3 - EXECUTION

3.1 PREPARATION

A. Rooms and spaces shall be broom clean before commencing painting Work.

B. Prepare surfaces in accordance with materials manufacturers' and MPI recommendations. Clean, remove foreign matter, patch holes, cracks, and imperfections with compound recommended by manufacturer of paint to be applied to these surfaces. All areas to be painted shall be brought to true, even surfaces.

C. Remove hardware, nameplates, switchplates, and other items which are not to be painted. Protect by masking or other means those items which cannot be removed.

D. Mix paints only over a removable surface in well ventilated areas and in accordance with manufacturers' instructions.

3.2 APPLICATION

A. Apply material evenly, free from sags, runs, crawls, holidays, or defects. Mix to proper consistency, brush out smooth, leaving minimum of brush marks; material shall be flowed on. Avoid lapping material on adjacent surfaces.

B. Apply paint by brushes, roller and back brush, or spray and back brush; sheepskin daubers may be used to reach surfaces which are inaccessible to paint brushes.

C. On smooth surfaces carefully sand all finishes for good adhesion of subsequent coats.

D. Apply putty, caulk, or spackle after surfaces are primed and primer is dry. Spot prime areas as required.

E. Tint all pigmented undercoats to approximately same shade as final coat. Noticeably decrease depth of shade in successive coats.

F. Shop primed metal surfaces of all mechanical and electrical equipment shall receive 2 finish coats of paint to match adjoining wall or ceiling surfaces.

G. At completion of Work of other Sections, touch up damaged finishes as required.

3.3 PATCHING

A. Repaint entire surface of patched surfaces to nearest change in plane.

3.4 CLEANING

A. Clean up spilled and splattered paint daily.

B. On completion carefully clean all glass, hardware, and similar surfaces to remove all misplaced paint and stain spots or spills. Leave Work in condition acceptable to Architect.

C. Leave premises in a clean and orderly condition.

END OF SECTION

SECTION 09 96 66 - WATER VAPOR CONTROL SYSTEMS

PART 1 – GENERAL

1.1 SUMMARY

A. This Section includes the furnishing, testing, and application of systems for the reduction of moisture vapor transmission and alkalinity control for Interior concrete slabs requiring the installation of VCT, vinyl flooring, rubber flooring, wood, carpet, and/or epoxy flooring systems.

B. Install only at areas of new interior concrete slab work at grade where resilient flooring is intended.

1.2 SUBMITTALS

A. General: Submit each item in this Article according to the requirements and Conditions of the Contract in Division 1. Specification Sections.

B. Product data for each type of product and process specified which shall include:
   1. Manufacturer's Specification
   2. Installation Instructions
   3. Independent Test Data
   4. Certification Requirements
   5. Warranty Information

C. Submit anhydrous calcium chloride testing according to ASTM F 1869 (latest revision) and/or RH Probe Test according to ASTM F 2170 (latest revision). Tests shall be performed by the Independent Inspector and results provided to the Architect, Owner, General Contractor, and Water Vapor Reduction System Manufacturer's Representative.

1.3 QUALITY ASSURANCE

A. Qualifications of Applicator

   1. Employ an Applicator currently approved by the manufacturer, experienced in surface preparation and application of the material and subject to inspection of the manufacturer.

B. Manufacturer's Qualifications

   1. Manufacturer shall have no less than ten (10) years experience in manufacturing water vapor reduction systems. The water vapor reduction system must be specifically formulated and marketed for water vapor reduction and alkalinity control without change of system design for a minimum period of five (5) years.
   2. Manufacturer shall provide the Owner with their standard fifteen (15) year warranty at no additional cost. Applicator of water vapor reduction system shall provide standard installation warranty for workmanship.
   3. Manufacturer must provide independent lab test reports documenting performance per the following:

a. ASTM E 96, Water Vapor Transmission (wet method) Performance shall be documented by an independent testing laboratory at a minimum of 97% water vapor transmission reduction compared to untreated concrete.
b. ASTM E96- Perm Rating - Standard Test Method for Water Vapor Transmission of Materials – Perm Rate results must not exceed 0.1 Perms (when tested under laboratory conditions).
c. ASTM D 1308; Insensitivity to alkaline environment up to, and including, pH 14. A 14 day test is required with no degradation of sample reported.
d. Certify acceptance and exposure to continuous topical water exposure after final cure.

1.4 DELIVERY, STORAGE AND HANDLING

A. Deliver products to the job site in their original unopened containers, clearly labeled with the manufacturer's name and brand designation.

B. Store products in an approved ventilated dry area; protect from dampness, freezing, and direct sun light. Product should not be stored in areas with temperatures in excess of 90° F or below 50° F.

C. Handle product in a manner that will prevent breakage of containers and damage products.

1.5 PROJECT/SITE CONDITIONS

A. ENVIRONMENTAL CONDITIONS
1. Do not apply moisture vapor reduction system to surfaces that may be exposed to excessive weather conditions (such as rain, wind, etc) until the material has fully cured, or when water is accumulated on the surface of the concrete. Protect freshly applied coating accordingly when material is applied outdoors.
2. Do not apply water vapor reduction system when temperature is lower than 50°F or expected to fall below this temperature within 24 hours from time of application.

B. PROTECTION: Protect water vapor reduction system to prevent damage from active rain or topical water for a minimum period of 24 hours from time of application.

1.6 SCHEDULING

A. Before installation of Resilient Flooring, rubber flooring, wood, carpet and/or epoxy flooring systems over the interior concrete slabs, anhydrous calcium chloride testing ASTM F 1869 (latest revision) and/or RH Probe Tests ASTM F 2170 shall be performed by the Independent Inspector as outlined In Article 3.1 below.

B. The Independent Inspector will coordinate with the Owner scheduling water vapor reduction system testing and allowing enough time to test, submit and install the water vapor reduction system before installation of floor finish.

C. The Independent Inspector will allow for as much time as is reasonable for the

concrete slab to dry before installing anhydrous calcium chloride tests and/or RH Probe Tests. All mastics, glues, and/or contaminants shall be removed to provide a clean, sound, concrete substrate prior to installing anhydrous calcium chloride tests as per ASTM F 1869 (latest revision).

D. The water vapor reduction system must allow installation as early as 7 days after concrete placement.

PART 2 – PRODUCTS

2.1 MANUFACTURERS

A. Water vapor reduction system, which may be incorporated in the work, shall be the product of a single manufacturer. Manufacturer's offering approved products:
   1. KOSTER VAP I® 2000 System by KOSTER American Corporation;
      Corporate Headquarters: 2585 Aviator Drive, Virginia Beach, VA 23453
      Phone: (757) 425-1206 – Fax: (757) 425-9951
      Web address: www.kosterusa.com

B. Terminology hereafter is based upon the products of KOSTER American Corporation.

2.2 MATERIALS

A. General: Use materials of one manufacturer throughout the project as hereinafter specified.
   1. System consists of one (1) coat of KOSTER VAP I® 2000. The Owner shall specify a floor covering system and adhesive having the ability to withstand water vapor transmission levels up to 3lbs/1000 ft^2/24 hr. The water vapor reduction system shall be required to reduce water vapor emissions by a minimum of 97% after final cure, as well as alkalinity reduction to acceptable pH levels.

B. 100% solids KOSTER VAP I® 2000 epoxy coating, containing specifically formulated chemicals and resins to provide the following characteristics and properties in a one coat system. No multi-coat systems are allowed. System must contain 100% solid epoxy system.
   1. ASTM E 96, Water Vapor Transmission (wet method) Performance shall be documented by an independent testing laboratory at a minimum 97% for water vapor transmission reduction compared to untreated concrete.
   2. ASTM E 96 Permeance Rating – product cannot exceed a 0.1 permeance rating (when tested under laboratory conditions).
   3. ASTM D 1308; Insensitivity to alkaline environment up to, and including, pH 14 in a bath test.
   4. Certify acceptance and exposure to continuous topical water exposure after final cure.
   5. Water Vapor reduction system shall be a single coat, stand alone system with no requirements for additional components such as sand broadcast for adhesion of flooring systems.
   6. System must reduce Calcium Chloride readings of up to 25lbs/1000 ft2/24 hrs by 97% in one coat. System must be able to perform as required with RH

Probe readings of 100%.

C. KOSTER VAP I® 06 Primer –(non-porous substrate primer)

2.3 AREA NOT REQUIRING VAPOR REDUCTION SYSTEM

A. Water vapor reduction system is not required on interior concrete slabs without floor finishes.

PART 3 – EXECUTION

3.1 EXAMINATION OF SUBSTRATE BEFORE APPLICATION

A. Calcium Chloride and/or RH Probe test requirements:
   1. Anhydrous calcium chloride testing shall be performed by the Independent Inspector as outlined in Section 01410 - Quality Requirements.
   2. Provide anhydrous calcium chloride tests according ASTM F 1869 (latest revision) protocols. Provide RH Probe Tests according to ASTM F 2170 protocols.
   3. Only conduct calcium chloride tests at the same temperature and humidity expected during normal use. If this is not possible, then the test conditions should be 75°F +/-10°F and 50% (+/-10%) relative humidity. Maintain these conditions 48 hours prior to and during testing. Water vapor transmission levels are directly affected by ambient room temperature and readings conducted without a sustained ambient temperature are NOT acceptable.
   4. The Independent Inspector shall provide test results with a marked up floor finish plan showing test results. The Independent Inspector shall provide a written clarification on status of the ambient air temperature and humidity before and during the testing procedures.

B. Testing for contaminants that inhibit adhesion
   1. On existing slabs (primarily), testing for concrete deficiencies and contaminates such as un-reacted water-soluble silicates, chlorides, A.S.R. (alkali-silica reaction), oil contamination, etc. is strongly recommended by KOSTER to avoid bonding issues. These conditions may cause bonding concerns with all epoxy and finished floor coatings, including the KOSTER VAP I® 2000. This testing should be performed by the owner's independent testing agency using standard coring methods. Also, the history of the slab installation should be reviewed. Concrete should conform to ACI Committee 201 Report "Guide to Durable Concrete."

C. Testing adhesion of the final flooring to the vapor barrier:
   1. The Independent Inspector shall verify proper adhesion of flooring adhesives, coatings, and leveling compounds to the final vapor reduction coating system for acceptability. Contact Manufacturer's Representatives for recommendations.

3.2 PREPARATION

A. Inspect all surfaces with regard to their suitability to receive moisture vapor reduction system with manufacturer’s representative.

B. Clean all surfaces to receive moisture vapor reduction system. Shot blast all floors to a Concrete Surface Profile (CSP) #3 or #4 and clean surfaces with an industrial vacuum cleaner and remove all residues from the substrate. Grinding is allowed only in areas not accessible by shot blasting. Remove ALL defective materials, and foreign matter such as dust, adhesives, leveling compounds, paint, dirt, floor hardeners, bond breakers, oil, grease, curing agents, form release agents, efflorescence, laitance, shot blast beads, etc. Repair all cracks, expansion joints, control joints, and open surface honeycombs and fill in accordance with Manufacturer’s recommendations. If concrete additives such as chlorides or any other water-soluble compounds that may contaminate surfaces have been used in the concrete mix do not use this product on that floor without written approval from KOSTER American Corporation. Reinforcing fibers that are visible after shot blasting must be removed and vacuumed leaving no fibers left on the concrete surfaces. Provide an uncontaminated, sound surface. DO NOT ACID ETCH!

C. Repair concrete prior to moisture vapor reduction system installation by using KOSTER SB Bonding Emulsion with approved concrete repair materials. Comply with all requirements as listed in Manufacturer's technical data information. Consult with vapor reduction manufacturer.

D Ensure surfaces to be treated with moisture vapor reduction system have NOT previously been treated with other materials such as underlayments, screeds, penetrating sealants, silicates, etc. If this is the case, consult with the Manufacturer’s Representative prior to any application of moisture vapor reduction system.

E. Any testing for concrete deficiencies or contamination such as alkali silica reaction, unreacted silicates, organic residue, etc. is recommended and is the responsibility of the Building owner.

F. Shot blast a small test area and review surface profile with the finished flooring applicator. As the KOSTER VAP I® 2000 is not a leveling material, make sure the flooring installer is aware that a feather finish or leveling material may be required to smoothen or level the surface of the KOSTER VAP I® 2000 treated concrete prior to the flooring installation.

3.3 MIXING

A. Use clean containers and mix thoroughly as per Manufacturer's requirements to obtain a homogeneous mixture. Use a low speed motor less than 400 rpm and a two bladed Jiffy-type mixing blade only. DO NOT AERATE. Mix ratios are measured by volume.

B. KOSTER VAP I® 2000 Mix Ratio: Mix Component A and B at a ratio of 2.4:1 by volume.

3.4 APPLICATION

A. KOSTER VAP I® 2000 System Application: The coverage rates for this Single Coat system depends on the surface profile and porosity of the concrete substrate as well as the measured level of moisture, from Section 3.1 Examination. On average, a coverage rate of 100-150 ft2/gal. may be expected. (See additional application instructions in KOSTER technical data sheets for specific coverage rates.)

B. After mixing, pour material on the substrate in a ribbon. Empty can completely.

C. Spread KOSTER VAP I® 2000 using a squeegee and back-roll with a 3/8 inch nap epoxy-rated roller leaving NO areas untreated.

D. Allow to cure a minimum of 12 hours before installing flooring system.

E. After shot blasting and installation of the KOSTER VAP I® 2000 vapor reduction system, a self-leveling cementitious underlayment system or patching compound may be used in conjunction with the KOSTER VAP I® 06 Primer (if required by the Owner, floor covering installer, or floor covering manufacturer to smoothen or level surfaces). Never apply KOSTER VAP I® 2000 over any new or existing cementitious underlayment system (especially if it is calcium sulfate based), unless approved in writing by the KOSTER American Technical Staff, (no exceptions).

F. When water based adhesives are used in the floor covering installation, use an approved underlayment system together with a non-porous substrate primer prior to the installation of the flooring system. Please consult the adhesive manufacturer for their minimum recommended thickness of cementitious underlayment to absorb excess moisture in the adhesive. Note: this applies only to certain water based adhesives. Most adhesives will bond directly to the KOSTER VAP I® 2000. Consult with KOSTER American Corporation for general guidelines.

3.4 CLEANING

A. Clean all tools and equipment with Xylene (or similar material) immediately after use when using the KOSTER VAP I® 2000.

B. Remove all debris resulting from water vapor reduction system installation from project site.

3.5 PROTECTION

A. Protect each coat during specified cure period from any kind of traffic, topical water and contaminants.

END SECTION 09 96 66

SECTION 10 14 00 - SIGNAGE

PART 1 GENERAL

1.1 SUMMARY

A. Section Includes:
1. Interior Signs.
2. Accessible Parking Signs.
3. Building Address Numbers.

1.2 QUALITY ASSURANCE

A. Regulatory Requirements: Products shall meet requirements of the Americans With Disabilities Act Accessibility Guidelines (ADAAG) and local amendments and modifications.

B. Installer: Installation shall be performed by installer specialized and experienced in work similar to that required for this project.

1.3 SUBMITTALS

A. Product Data: Submit product data for specified products. Include material details for each sign specified.

B. Shop Drawings: Submit shop drawings showing layout, profiles, and product components, including dimensions, anchorage, and accessories.

C. Samples: Submit supplier's standard color chart for selection purposes and selected colors for verification purposes.

D. Installation: Submit supplier's installation instructions.

E. Closeout Submittals:
1. Submit operation and maintenance data for installed products, including precautions against harmful cleaning materials and methods.
2. Submit warranty documents specified herein.

1.4 DELIVERY, STORAGE, AND HANDLING

A. General
1. Comply with manufacturer's ordering instructions and lead time requirements to avoid construction delays.
2. Deliver products in manufacturer's original, unopened, undamaged containers with identification labels intact.
3. Store products protected from weather, temperature, and other harmful conditions as recommended by supplier.
4. Handle products in accordance with manufacturer's instructions.

1.5 WARRANTY

A. Manufacturer's Warranty: Submit manufacturer's standard warranty document executed by authorized company official.

PART 2 PRODUCTS

2.1 SIGNAGE SYSTEMS

A. Interior Signs
1. .090 aluminum with painted two tone acrylic polyurethane satin finish.
2. Graphics to be ADA direct print tactile/braille.
3. Dimensions and text as shown on drawings.
4. Colors as selected.
5. Attach to wall with VHB tape and silicone adhesive on back side.

B. Miscellaneous
1. Accessible Parking Signs: Aluminum industrial strength with 3M engineer grade reflective vinyl graphics. Comply with Washington State, ICC A117.1, UFAS and ADAAG requirements for graphics and mounting height.
2. Building Address Numbers: White vinyl self-adhered to meet City and Fire Department requirements.

PART 3 EXECUTION

3.1 EXAMINATION

A. Site Verification of Conditions: Verify installation conditions previously established under other sections are acceptable for product installation in accordance with manufacturer's instructions.

B. Scheduling of installation by Owner or it’s representative implies that substrate and conditions are prepared and ready for product installation. Proceeding with installation implies installer’s acceptance of substrate and conditions.

3.2 INSTALLATION

A. Install product in accordance with supplier’s instructions.

B. Install product in locations indicated using mounting methods recommended by sign manufacturer and free from distortion, warp, or defect adversely affecting appearance.

C. Install product level, plumb, and at heights indicated.

D. Install product at heights to conform to Americans with Disabilities Act Accessibility Guidelines (ADAAG) and applicable local amendments and regulations.

E. Install signs within the following tolerances and in accordance with manufacturer's recommendations:
   1. Exterior: Within 1 inch vertically and horizontally of intended location.
   2. Interior: Within 1/4 inch vertically and horizontally of intended location.

3.3 CLEANING, PROTECTION, AND REPAIR

A. Repair scratches and other damage which might have occurred during installation. Replace components where repairs were made but are still visible to the unaided eye from a distance of 5 feet.

B. Remove temporary coverings and protection to adjacent work areas. Clean installed products in accordance with manufacturer's instructions prior to Owner's acceptance. Remove construction debris from project in accordance with provisions in Division 1.

3.4 SIGN SCHEDULE

A. Schedule: Refer to Drawings for sizes, locations, and layout of signage types, sign text copy, and graphics.

END OF SECTION

SECTION 10 21 13 - METAL TOILET PARTITIONS

PART 1 - GENERAL

1.1 SUMMARY

A. Section Includes:
   1. Steel toilet compartment partitions for following applications:
      a. Toilet enclosures.
      b. Privacy screens.
      c. Urinal screens.

B. Related Sections:
   1. Section 06 10 00 – Rough Carpentry
   2. Section 10 28 00 – Toilet Accessories

1.2 REFERENCES

A. ASTM International (ASTM):

   1. ASTM A 653/A 653M - Standard Specification for Steel Sheet, Zinc-Coated (Galvanized) or Zinc-Iron Alloy-Coated (Galvannealed) by the Hot-Dip Process.
   2. ASTM A 666 - Standard Specification for Annealed or Cold-Worked Austenitic Stainless Steel Sheet, Strip, Plate, and Flat Bar.
   3. ASTM A 743/A 743M - Standard Specification for Castings, Iron-Chromium, Iron-Chromium-Nickel, Corrosion Resistant, for General Application.
   4. ASTM B 86 - Standard Specification for Zinc and Zinc-Aluminum (ZA) Alloy Foundry and Die Castings.
   5. ASTM B 221 - Specification for Aluminum and Aluminum-Alloy Extruded Bars, Rods, Wire, Profiles, and Tubes.
   6. ASTM E 84 - Standard Test Method for Surface Burning Characteristics of Building Materials.

B. International Code Council (ICC)/American National Standards Institute (ANSI):

   1. ICC/ANSI A117.1 - Accessible and Usable Buildings and Facilities, as applicable to toilet compartments designated as accessible.

1.3 SUBMITTALS

A. Product Data: Manufacturer's data sheets for each type of product indicated. Include fabrication details, description of materials and finishes.

   1. Product Test Reports: When requested by Architect, submit documentation by qualified independent testing agency indicating compliance of products with requirements.

B. Shop Drawings: Include overall product dimensions, floor plan, elevations, sections, details, and attachments to other work. Include choice of options with details.

C. Samples for Selection: Furnish samples of manufacturer's full range of colors for initial selection.

D. Samples for Verification: Furnish physical sample of material in selected color.

1. Size: 2 by 2 inch (52 by 52 mm) minimum, in type of finish specified.

1.4 INFORMATIONAL SUBMITTALS

A. Warranty: Sample of special warranty.

1.5 CLOSEOUT SUBMITTALS

A. Maintenance and cleaning instructions.

1.6 QUALITY ASSURANCE

A. Manufacturer Qualifications: Approved manufacturer listed in this section, with minimum 5 years experience in the manufacture of toilet compartments.

B. Installers Qualifications: Experienced Installer regularly engaged in installation of toilet compartments for minimum 3 years.

C. Source Limitations: Obtain toilet compartment components and accessories from single manufacturer.

D. Accessibility Requirements: Comply with requirements of ICC/ANSI 117.1, and with requirements of authorities having jurisdiction.

E. Surface-Burning Characteristics: As determined by testing identical products according to ASTM E 84 by qualified testing agency. Identify products with appropriate markings of applicable testing agency.

1. Flame-Spread Index: 0.
2. Smoke-Developed Index: 0.

1.7 DELIVERY, STORAGE, AND HANDLING

A. Do not deliver toilet compartments to site until building is enclosed and HVAC systems are in operation.

1. Deliver toilet compartments in manufacturer's original packaging.
2. Store in an upright condition.

1.8 WARRANTY

A. Special Manufacturer's Warranty: Provide manufacturer's standard form in which manufacturer agrees to repair or replace products that fail in materials or workmanship during the following period after substantial completion:

1. Powder Coated Steel Toilet Partitions: Against rust-out: 15 years.

PART 2 - PRODUCTS

2.1 MANUFACTURERS

A. Basis-of-Design Manufacturer: Subject to compliance with requirements, provide products of The Mills Company, Marion, OH 43302.

1. Contact Information: (800)272-3539, fax (262)251-5817; Email info@BradleyCorp.com; Website www.bradleycorp.com.

2. Substitutions allowed upon approval.

2.2 MATERIALS

A. Metallic Coated Steel Sheet: ASTM A 653/A 653M, galvannealed commercial steel sheet suitable for exposed applications. Provide with mill phosphatized surface. Provide smooth material, without creases or ripples.

B. Zinc Aluminum Magnesium and Copper Alloy (Zamac): ASTM B 86.

C. Stainless Steel Sheet: ASTM A 240 or A 666, 300 series.

D. Stainless Steel Castings: ASTM A 743/A 743M.

E. Aluminum: ASTM B 221.

2.3 STEEL TOILET COMPARTMENTS

A. Toilet Compartment Type:

1. Floor anchored.

a. Basis of Design Product: Bradley, Mills Partitions, Floor Braced, Series 500.

B. Privacy Screen Type:

1. Floor anchored.

a. Basis of Design Product: Bradley, Mills Partitions, Floor Braced, Series 500.

C. Urinal Screen Style:

1. Wall hung with brackets:

a. Basis of Design Product: Bradley, Mills Partitions, Model No. 4.

D. Door, Panel, and Pilaster Construction, General: Form edges with interlock to provide watertight fit without crown molding. Braze corners and finish smooth.

1. Provide exposed surfaces free of pitting, visible seams and fabrication marks, stains, telegraphing of core material, or other imperfections.
2. Core Material: Manufacturer's standard sound-deadening, water resistant honeycomb in thickness required to provide finished thickness for doors, panels and pilasters.

E. Door Construction: 1 inch (25 mm) thick, constructed from 0.0313 inch/22 ga (0.794 mm) galvannealed steel.

1. Provide each door with internal 0.0625 inch/16 ga (1.59 mm) and 0.0781 inch/14 ga (1.98 mm) welded reinforcements at top and bottom hinge locations, with factory installed concealed true gravity cam hinges.

F. Panel Construction: 1 inch (25 mm) thick, constructed from 0.0313 inch/22 ga (0.794 mm) galvannealed steel.

1. Grab-Bar Reinforcement: Provide concealed internal reinforcement for grab bars mounted on units.

G. Pilaster Construction: 1 1/4 inch (32 mm) thick, constructed from 0.0375 inch/20 gauge (0.953 mm) galvannealed steel.

1. Provide pilaster with internally welded bracket suitable to accept minimum 3 inch (76 mm) long, 5/16 inch (7.9 mm) stainless steel hex bolt for leveling.

H. Headrail: Extruded anodized aluminum headrail with anti-grip profile. Provide fasteners for attachment to pilaster and stainless steel brackets to secure to wall.

I. Shoes: 4 inches (102 mm) high minimum, Type 304 stainless steel with No. 4 satin brushed finish. Secured to the inside face of the pilaster with stainless steel torx-head fasteners.

J. Urinal-Screen Construction: Matching toilet compartment panel construction

K. Brackets (Fittings):

1. Stirrup Type: Ear or U-brackets; stainless steel at toilet compartments.
2. Full-Height (Continuous) Type: Manufacturer's standard design; stainless steel at urinal screens.

L. Steel Sheet Finish: Manufacturer's standard powder coat finish, with one color in each room.

1. Color: As selected by Architect from manufacturer's full range.

2.4 HARDWARE

A. Hardware, Standard Duty: Manufacturer's standard chrome-plated zamac castings, including corrosion-resistant, tamper-resistant fasteners:

1. Hinges: Self-closing [wrap-around gravity-type] [continuous spring-loaded type] adjustable to hold doors open at any angle up to 90 degrees, with emergency access by lifting door.
2. Latch and Keeper: [Concealed slide latch] [Surface-mounted slide latch] with [wrap-around] [flat] rubber-faced combination door strike and keeper, with provision for emergency access, meeting requirements for accessibility at accessible compartments.
3. Coat Hook: Combination hook and rubber-tipped stop, sized to prevent door from hitting compartment-mounted accessories. Provide wall bumper where door abuts wall. Provide formed L-shaped hook without stop at outswing doors.
4. Door Pull: Standard unit on outside of inswing doors. Provide pulls on both sides of outswing doors.

2.5 FABRICATION

A. Floor-Anchored Units: Provide manufacturer's standard corrosion-resistant anchoring assemblies with leveling adjustment nuts at pilasters for structural connection to floor. Provide shoes at pilasters to conceal anchorage.

B. Door Size and Swings: Unless otherwise indicated, provide 26-inch- (660-mm-) wide, in-swinging doors for standard toilet compartments and 36-inch- (914-mm-) wide, out-swinging doors with a minimum 32-inch- (813-mm-) wide clear opening for compartments designated as accessible.

PART 3 - EXECUTION

3.1 EXAMINATION

A. Examine work area to verify that measurements, substrates, supports, and environmental conditions are in accordance with manufacturer's requirements to allow installation.

1. Proceed with installation once conditions meet manufacturer's requirements.

3.2 INSTALLATION

A. General: Comply with manufacturer's written installation instructions. Install units rigid, straight, level, and plumb. Secure units in position with manufacturer's recommended anchoring devices.

B. Install toilet partitions and screens in spaces with operating, temperature controlled HVAC systems. Shield partitions and screens from direct sunlight.

C. Clearances: Install with clearances indicated on Drawings. Where clearances are not indicated, allow maximum 1/2 inch (13 mm) between pilasters and panels, and 1 inch (25 mm) between panels and walls.

D. Stirrup Brackets: Secure panels to walls and to pilasters with no fewer than two brackets attached and near top and bottom of panel. Locate wall brackets so holes for wall anchors occur in masonry or tile joints. Align brackets at pilasters with brackets at walls.

3.3 ADJUSTING

A. Hardware Adjustment: Adjust and lubricate hardware according to hardware manufacturer's written instructions for proper operation. Set hinges on in-swinging doors to hold doors open approximately 15 degrees from closed position when unlatched. Set hinges on out-swinging doors to return doors to fully closed position.

3.4 FINAL CLEANING

A. Remove packaging and construction debris and legally dispose of off-site.

B. Clean partition and screen surfaces with materials and cleansers in accordance with manufacturer's recommendations.

END OF SECTION

SECTION 10 22 26 - OPERABLE PARTITIONS

PART 1 - GENERAL

1.1 SUMMARY

A. Section Includes:

1. Manually operated, paired panel operable partitions.

B. Related Sections include the following:

1. Division 6 Sections for wood framing and supports, and all blocking at head and jambs as required.

2. Refer to drawings for opening requirements.

1.2 QUALITY ASSURANCE

A. Installer Qualifications: An experienced installer who is certified in writing by the operable partition manufacturer, as qualified to install the manufacturer's partition systems for work similar in material, design, and extent to that indicated for this Project.

B. Preparation of the opening shall conform to the criteria set forth per ASTM E557 *Standard Practice for Architectural Application and Installation of Operable Partitions*.

1.3 SUBMITTALS

A. Certified Installer Qualifications

B. Product Data: Material descriptions, construction details, finishes, installation details, and operating instructions for each type of operable partition, component, and accessory specified.

C. Shop Drawings: Show location and extent of operable partitions. Include plans, elevations, sections, details, attachments to other construction, and accessories. Indicate dimensions, weights, conditions at openings, and at storage areas, and required installation, storage, and operating clearances. Indicate location and installation requirements for hardware and track, including floor tolerances required and direction of travel. Indicate blocking to be provided by others.

D. Setting Drawings: Show imbedded items and cutouts required in other work, including support beam punching template.

E. Samples: Color samples demonstrating full range of finishes available by Architect. Verification samples will be available in same thickness and material indicated for the work.

1.4 DELIVERY, STORAGE, AND HANDLING

A. Clearly mark packages and panels with numbering systems used on Shop Drawings. Do not use permanent markings on panels.

B. Protect panels during delivery, storage, and handling to comply with manufacturer's direction and as required to prevent damage.

1.5 WARRANTY

A. Provide written warranty by manufacturer of operable partitions agreeing to repair or replace any components with manufacturing defects.

B. Warranty period: Two (2) years.

C. Installer Warranty of one (1) year.

PART 2 - PRODUCTS

2.1 MATERIALS

A. Modernfold, Inc. Greenfield, In; Acousti-Seal #932.

2.2 OPERATIONS

A. Acousti-Seal #932: Series of paired flat panels hinged together in pairs, manually operated, top supported with operable floor seals.

B. Final Closure: Hinged Panel Closure.

2.3 PANEL CONSTRUCTION

A. Nominal 3-inch (76mm) thick panels in manufacturer's standard 24-inch widths. All panel horizontal and vertical framing members fabricated from minimum 18-gage or 16-gage formed steel with overlapped and welded corners for rigidity. Top channel is reinforced to support suspension system components. Frame is designed so that full vertical edges of panels are of formed steel and provide concealed protection of the edges of the panel skin.

B. Panel Skin Options:

1. 1/2-inch (13mm) tackable 100% recycled gypsum board, class "A" rated single material or composite layers continuously bonded to panel frame. Acoustical ratings of panels with this construction:47 STC.

C. Hinges for Closure Panels, Pass Doors, and Pocket Doors shall be:

1. Full leaf butt hinges, attached directly to panel frame with welded hinge anchor plates within panel to further support hinge mounting to frame. Lifetime warranty on hinges. Hinges mounted into panel edge or vertical astragal are not acceptable.

D. Panel Trim: No vertical trim required or allowed on edges of panels; minimal groove appearance at panel joints.

E. Panel Weights: Approximately 7 LBS/Square Foot.

2.4 PANEL FINISHES

A. Panel face finish shall be Reinforced vinyl with woven backing weighing not less than 21 ounces (595 g) per lineal yard. Standard color/finish to be selected.

B. Panel trim: Exposed panel trim of one consistent color from manufacturer's standard offering.

2.5 SOUND SEALS

A. Vertical Interlocking Sound Seals between panels: Roll-formed steel astragals, with reversible tongue and groove configuration in each panel edge for universal panel operation. Rigid plastic or aluminum astragals or astragals in only one panel edge are not acceptable.

B. Horizontal Top Seals: Continuous contact extruded vinyl bulb shape with pairs of non-contacting vinyl fingers to prevent distortion without the need for mechanically operated parts.

C. Horizontal Bottom Seals (select one):

1. Modernfold IA2 bottom seal: Automatic operable seals providing nominal 2-inch (51mm) operating clearance with an operating range of +1/2-inch (13mm) to –1-1/2-inch (38mm) which automatically drop as panels are positioned, without the need for tools or cranks.

2.6 SUSPENSION SYSTEM

A. #17 Suspension System

1. Suspension Tracks: Minimum 11-gage, 0.12-inch (3 mm) roll-formed steel track, suitable for either direct mounting to a wood header or supported by adjustable steel hanger brackets, supporting the load-bearing surface of the track, connected to structural support by pairs of 3/8-inch (9.5mm) diameter threaded rods. Aluminum track is not acceptable.
   a. Exposed track soffit: Steel, integral to track, and pre-painted off-white.
2. Carriers: One all-steel trolley with steel-tired ball bearing wheels per panel (except hinged panels). Non-steel tires are not acceptable.
3. Warranty period: Five (5) years

PART 3 - EXECUTION

3.1 INSTALLATION

A. General: Comply with ASTM E557, operable partition manufacturer's written installation instructions, Drawings and approved Shop Drawings.

B. Install operable partitions and accessories after other finishing operations, including painting have been completed.

C. Match operable partitions by installing panels from marked packages in numbered sequence indicated on Shop Drawings.

D. Broken, cracked, chipped, deformed, or unmatched panels are not acceptable.

3.2 CLEANING AND PROTECTION

A. Clean partition surfaces upon completing installation of operable partitions to remove dust, dirt, adhesives, and other foreign materials according to manufacturer's written instructions.

B. Provide final protection and maintain conditions in a manner acceptable to the manufacturer and Installer that insure operable partitions are without damage or deterioration at time of Substantial Completion.

3.3 ADJUSTING

A. Adjust operable partitions to operate smoothly, easily, and quietly, free from binding, warp, excessive deflection, distortion, nonalignment, misplacement, disruption, or malfunction, throughout entire operational range. Lubricate hardware and other moving parts..

3.4 EXAMINATION

A. Examine flooring, structural support, and opening, with Installer present, for compliance with requirements for installation tolerances and other conditions affecting performance of operable partitions. Proceed with installation only after unsatisfactory conditions have been corrected.

3.5 DEMONSTRATION

A. Demonstrate proper operation and maintenance procedures to Owner's representative.

B. Provide Operation and Maintenance Manual to Owner's representative.

END OF SECTION 10 22 26

SECTION 10 26 00 – WALL PROTECTION

PART 1 – GENERAL

1.1 SUMMARY

A. This section includes the following types of wall protection systems:
   1. Wall Protection Paneling
   2. Corner Guards

B. Related Sections: The following sections contain requirements related to this section:
   1. Section 06 10 00: Rough Framing.
   2. Section 06 20 00: Finish Carpentry

1.2 REFERENCES

A. Building codes (IBC, Washington State Code Amendment and Life Safety)

B. American Society for Testing and Materials (ASTM)

C. Underwriters Laboratories (UL)

1.4 SUBMITTALS

A. General: Submit the following in accordance with conditions of contract and specification section 01 33 00 “Submittal Procedures”.

B. Product data and detailed specifications for each system component and installation accessory required, including installation methods for each type of substrate.

C. Shop drawings showing locations, extent and installation details of crash rails. Show methods of attachment to adjoining construction.

D. Samples for verification purposes: Submit the following samples, as proposed for this work, for verification of color, texture, pattern and end cap attachment and alignment.
   1. 12" (304.8mm) long sample of each model specified including end cap or intermediate transitions and mounting hardware.

E. Product test reports from a qualified independent testing laboratory showing compliance of each component with requirements indicated.

F. Maintenance data for wall protection system components for inclusion in the operating and maintenance manuals specified in Division 1.

1.5 QUALITY ASSURANCE

A. Installer qualifications: Engage an installer who has experience in installation of systems similar in complexity to those required for this project.

B. Manufacturer's qualifications: experience in the production of specified products and a record of successful in-service performance.

C. Code compliance: Assemblies should conform to all applicable codes including IBC, State Code Amendments and Life Safety.

D. Fire performance characteristics: Provide wall protection system components with UL label indicating that they are identical to those tested in accordance with ASTME84 (CAN/ULC S102.2) for Class 1 characteristics listed below:
   1. Flame spread: 25 or less
   2. Smoke developed: 450 or less

E. Impact Strength: Provide assembled wall protection units that have been tested in accordance with the applicable provisions of ASTM F476.

F. Chemical and stain resistance: Provide wall protection system components with chemical and stain resistance in accordance with ASTM D-1308.

G. Color match: Provide wall protection components that are color matched in accordance with the following:
   1. Delta Ecmc of no greater than 1.0 using CIELab color space.

H. Single source responsibility: Provide all components of the wall protection system manufactured by the same company to ensure compatibility of color, texture and physical properties.

1.6 DELIVERY, STORAGE AND HANDLING

A. Deliver materials to the project site in unopened original factory packaging clearly labeled to show manufacturer.

B. Store materials in original, undamaged packaging in a cool, dry place out of direct sunlight and exposure to the elements. A minimum room temperature of 40°F (4°C) and a maximum of 100°F (38°C) should be maintained.

C. Material must be stored flat.

1.7 PROJECT CONDITIONS

A. Materials must be acclimated in an environment of 65°-75°F (18°-24°C) for at least 24 hours prior to beginning the installation.

B. Installation areas must be enclosed and weatherproofed before installation commences.

PART 2 - PRODUCTS

2.1 WALL PANEL MANUFACTURERS

A. Interior surface protection products specified herein and installed on the submittal

drawings shall be manufactured by Construction Specialties, Inc., or approved.

2.2 WALL PANELING – SERVICE AREAS

A. (WC-2) Marlite, Standard FRP, smooth panels (4’ x 8’ x 3/32”) with Class ‘C’ rating and associated harmonizing trim moldings at all joints and edge conditions. Wall Mounting with low VOC construction grade adhesive with caulked joints. Color to be selected.

2.3 FABRICATION

A. General: Fabricate wall protection systems to comply with requirements indicated for design, dimensions, detail, finish and member sizes.

2.4 STAINLESS STEEL CORNER GUARDS

A. Manufacturers:
1. Pawling Corporation, www.pawling.com
2. InPro Corporation, www.inprocorp.com
3. Local Custom Substitution: See Section 01 73 00.

B. Provide at all outside corners as shown on drawings.

C. ASTM A666, type 304, 14 gauge stainless steel, 3-1/2 inch by 3-1/2 inch, 1/8 inch radius edge, 90 degree corners, unless other shapes are indicated on the drawings.
1. Provide 48 inch length from finish floor and as indicated on Drawings.

D. Adhesive Fasteners and Accessories: As instructed by manufacturer for installation.

E. U Shape Corner Guards: Custom made to fit around wall ends with 3-1/2inch leg extensions. Check Drawings for wall thicknesses.

F. Finishes
1. Stainless Steel Corner Guards: No. 4 polish.

PART 3 - EXECUTION

3.1 EXAMINATION

A. Verification of conditions: Examine areas and conditions under which work is to be performed and identify conditions detrimental to proper or timely completion.
1. Do not proceed until unsatisfactory conditions have been corrected.

3.2 PREPARATION

A. Surface preparation: Prior to installation, clean substrate to remove dirt, debris and loose particles. Perform additional preparation procedures as required by manufacturer's instructions.

B. Protection: Take all necessary steps to prevent damage to material during installation as required in manufacturer’s installation instructions.

3.3 WALL PANELING INSTALLATION

A. Install the work of this section in strict accordance with the manufacturer's recommendations, using only approved mounting hardware, and locating all components firmly into position, level and plumb.

B. Temperature at the time of installation must be between 65°-75°F (18°-24°C) and be maintained for at least 48 hours after the installation.

C. Where splices occur in horizontal runs, splice retainer and cover at different locations along the run.

3.4 CORNER GUARD INSTALLATION

A. Make installations level, plumb, and rigidly in place.

B. Full Height: Position corner guards to butt against finished floor and underside of ceiling, except at walls with chair rails, butt to underside of chair rail.

C. Half Height: Position corner guards ¼ inch above resilient base, for approximately 401/4 inch above finished floor, typical.

D. Stainless Steel Corner Guards:
1. Attach with mechanical fasteners, counter sunk flush into face, and attach with adhesive. Install near each end of return leg and at maximum 3’-0” o.c. spacing vertically.
2. Adhesively apply to walls prior to mechanical fastening.

3.5 CLEANING

A. General: Immediately upon completion of installation, clean covers and accessories in accordance with manufacturer’s recommended cleaning method.

B. Remove surplus materials, rubbish and debris resulting from installation as work progresses and upon completion of work.

3.6 PROTECTION

A. Protect installed materials to prevent damage by other trades. Use materials that may be easily removed without leaving residue or permanent stains.

END OF SECTION

SECTION 10 28 13 – TOILET ACCESSORIES

PART 1 - GENERAL

1.1 SUMMARY

A. Section Includes:

1. Restroom accessories.

1.2 SUBMITTALS

A. Submittals shall be in accordance with Division 1, “Submittal Procedures.”

B. Product Data: For each type of product indicated. Include the following:

1. Construction details and dimensions.
2. Anchoring and mounting requirements, including requirements for cutouts in other work and substrate preparation.
3. Material and finish descriptions.
4. Features that will be included for Project.
5. Manufacturer's warranty.

C. Product Schedule: Indicating types, quantities, sizes, and installation locations by room of each accessory required.

1. Identify locations using room designations indicated.
2. Identify products using designations indicated.

D. Maintenance Data: For toilet and bath accessories to include in maintenance manuals.

E. Warranty: Sample of special warranty.

1.3 QUALITY ASSURANCE

A. Source Limitations: For products listed together in the same Part 2 articles, obtain products from single source from single manufacturer.

1.4 COORDINATION

A. Coordinate accessory locations with other work to prevent interference with clearances required for access by people with disabilities, and for proper installation, adjustment, operation, cleaning, and servicing of accessories.

B. Deliver inserts and anchoring devices set into concrete or masonry as required to prevent delaying the Work.

1.5 WARRANTY

A. Special Mirror Warranty: Manufacturer's standard form in which manufacturer agrees to replace mirrors that develop visible silver spoilage defects and that fail in materials or workmanship within specified warranty period.

1. Warranty Period: 15 years from date of Substantial Completion.

PART 2 - PRODUCTS

2.1 MATERIALS

A. Stainless Steel: ASTM A 666, Type 304, 0.031-inch (0.8-mm) minimum nominal thickness unless otherwise indicated.

B. Fasteners: Screws, bolts, and other devices of same material as accessory unit and tamper-and-theft resistant where exposed, and of galvanized steel where concealed.

C. Chrome Plating: ASTM B 456, Service Condition Number SC 2 (moderate service).

2.2 PUBLIC-USE TOILET ROOMS AND JANITORIAL ROOMS:

A. Basis-of-Design Product: Subject to compliance with requirements, Bobrick Washroom Equipment, Inc., or approved substitution.

B. Toilet Tissue Dispenser:

1. Basis-of-Design Product: Georgia Pacific #GPC 56784.
2. Description: Two-roll unit.
3. Mounting: Surface mounted.
4. Capacity: Standard 3000 sheet 2-ply rolls or 6000 single-ply rolls.
5. Material and Finish: Translucent plastic-grey smoke.

C. Trash Receptacle:

1. Basis-of-Design Product: Bobrick; Contura Series, B-43644.
2. Semi-Recessed type.
3. Provide 1-year worth of removable liners
4. Install at locations shown on drawings.

D. Liquid-Soap Dispenser:

1. Basis-of-Design Product: Brighton Professional #26463.

E. Grab Bar GB-1 = 36 inch and GB-2 = 48 inch and GB-3 = 18 inch vertical:

1. Basis-of-Design Product: Bobrick; B-5806 x length.
2. Mounting: Flanges with concealed fasteners.

3. Material: Stainless steel, 0.05 inch (1.3 mm) thick.

   a. Finish: Smooth, No. 4 finish (satin) on ends and slip-resistant (peened) texture in grip area.

4. Outside Diameter: 1-1/4 inches (32 mm).
5. Configuration and Length: As indicated on Drawings.

F. Sanitary-Napkin Disposal Unit:

1. Basis-of-Design Product: ASI #0852.
2. Mounting: Surface mounted.
3. Door or Cover: top-opening cover.
4. Receptacle: Removable.
5. Material and Finish: Stainless steel, No. 4 finish (satin) at Lower Retail Level.

G. Mirror:
1. Surface mounted with frame.
2. Size per drawings.

H. Paper Towel Dispenser
1. Basis of Design: Bobrick, _____ (C-fold type)

I. Coat Hook:
1. Basis of Design: Bobrick B-233 at Toilet side of Toilet Room Doors.

J. Changing Station
1. Basis of Design: Koala KB200-05SS; Stainless Steel veneer over polypropylene cabinet of “white granite” interior, horizontal wall mounted station. Install at locations shown on drawings.

K. Mop and Broom Holder
1. Basis of Design: Bobrick B-223 x36.

L. Sink P-Trap Protection
   1. See Mechanical/Plumbing Specs.

2.3 FABRICATION

A. General: Fabricate units with tight seams and joints, and exposed edges rolled. Hang doors and access panels with full-length, continuous hinges. Equip units for concealed anchorage and with corrosion-resistant backing plates.

B. Keys: Provide universal keys for internal access to accessories for servicing and resupplying. Provide minimum of six keys to Owner's representative.

PART 3 - EXECUTION

3.1 INSTALLATION

A. Install accessories according to manufacturers' written instructions, using fasteners appropriate to substrate indicated and recommended by unit manufacturer. Install units level, plumb, and firmly anchored in locations and at heights indicated.

B. Grab Bars: Install to withstand a downward load of at least 250 lbf (1112 N), when tested according to ASTM F 446.

3.2 ADJUSTING AND CLEANING

A. Adjust accessories for unencumbered, smooth operation. Replace damaged or defective items.

B. Remove temporary labels and protective coatings.

C. Clean and polish exposed surfaces according to manufacturer's written recommendations.

END OF SECTION

SECTION 10 44 00 – FIRE PROTECTION SPECIALTIES

PART 1 - GENERAL

1.1 SUBMITTALS

A. Product Data: Manufacturer's data for materials, fabrication, colors and finishes, installation details, and maintenance instructions.

PART 2 - PRODUCTS

2.1 MATERIALS

A. Fire Extinguishers: J.L. Industries, Cosmic 10E, 4A-80BC.

B. Fire Extinguisher Cabinet
   1. JL Industries, Ambassador Series, semi recessed, Model 1017B10, solid door with 2” x 4” clear acrylic view window and Saf-T-Lock with 3” rolled cabinet edge.
   2. Provide rated semi-recessed type at rated wall conditions.

C. Emergency Responder Lock Box:
   1. Provide and Install at 2 locations per drawings.
   2. Provide access key/card secure box meeting Local Fire Department requirements.
      a. Basis of Design: Box (Supra SUP2HS) and Cylinder Core (Medico MED60065OT), or as required by Local AHJ.

PART 3 - EXECUTION

3.1 INSTALLATION

A. Install in accordance with manufacturer's instructions.

END OF SECTION

SECTION 11 40 00 - KITCHEN EQUIPMENT

PART 1 - GENERAL

1.1 SUMMARY

A. Section includes new equipment for St. Andrew Catholic Church Parish Hall, Sumner, Washington.

1.2 SUBMITTALS

A. Product Data: For each type of new equipment component indicated.

B. Shop Drawings: For any size fabricated equipment. Include plans, elevations, sections, roughing-in dimensions, fabrication details, utility service requirements, and attachments to other work.

C. Samples: For each exposed product and for each color and texture specified.

D. Coordination Drawings: See Food Service Drawings (Bargreen-Ellingson)

1. Indicate locations of equipment and connections to utilities.
2. Key equipment using same designations as indicated on Drawings.
3. Include plans and elevations; clearance requirements for equipment access and maintenance; details of equipment supports; and utility service characteristics.

E. Sample warranties for new equipment.

F. Operation and maintenance data.

1.3 QUALITY ASSURANCE

A. Steam Equipment: Provide steam-generating and direct-steam heating equipment that is fabricated and labeled to comply with ASME Boiler and Pressure Vessel Code.

B. Regulatory Requirements: Install equipment to comply with the following:

1. ASHRAE 15, "Safety Code for Mechanical Refrigeration."
2. NFPA 54, "National Fuel Gas Code."
3. NFPA 70, "National Electrical Code."

C. Seismic Restraints: Comply with SMACNA's "Kitchen Ventilation Systems and Food Service Equipment Fabrication and Installation Guidelines," Appendix A, "Seismic Restraint Details," unless otherwise indicated.

D. Preinstallation Conference: Conduct conference at Project site with all subcontractors involved with scope.

1.4 WARRANTY

A. Provide Manufacturer's standard forms in which manufacturer agrees to repair or replace components that fail in materials or workmanship within specified warranty period.
   1. Warranty Period: Typically Five years from date of Substantial Completion or as scheduled by Bargreen-Ellingson.

PART 2 - PRODUCTS

2.1 KITCHEN EQUIPMENT

A. Schedule Equipment (per drawings), see kitchen equipment Appendix A, Bargreen Ellingson “St. Andrew’s 10.2.19 quote” date 10/02/2019. For additional information.

   1. New Equipment to be provided:

      a. Pass through window with tray slide

      b. Work table

      c. Countertop hot wells

      d. Dirty dish table

      e. Faucet

      f. Floor through

      g. Ventless dishmachine

      h. Clean dishtable

      i. Pre rinse faucet

      j. Faucet

      k. Slant rack

      l. Work table with pot and pan rack

      m. Prep table with sinks

      n. Faucet

o. Faucet

p. Shelving

q. Shelving

r. Ice cuber

s. Floor trough

t. Water filter

u. Mop sink

v. Faucet

w. Shelf

x. Freezer

y. Refrigerator

z. Work table

aa. Coffee brewer

bb. Type I hood

cc. Control panel

dd. Exhaust fan

ee. Exhaust ductwork

ff. Make up air (Coordinate with Mechanical Drawings)

gg. Make up air ductwork (Coordinate with Mechanical Drawings)

hh. Fire suppression(Coordinate with Mechanical Drawings)

ii. Wall flashing

jj. 6 burner range griddle

kk. Convection oven

ll. Mobile heated cabinet

mm. Cart

nn. Airpot

oo. Dolly

pp. Rack dolly

qq. Pass through window

rr. Hand sink

2.2 MISCELLANEOUS MATERIALS

A. Elastomeric Joint Sealant: ASTM C 920; silicone Type S (single component), Grade NS (nonsag), Class 25, Use NT (nontraffic) related to exposure, and Use M, G, A, or O as applicable to joint substrates indicated.

1. Public Health and Safety Requirements:

   a. Sealant is certified for compliance with NSF standards for end-use application indicated.
   b. Washed and cured sealant complies with the FDA's regulations for use in areas that come in contact with food.

2. Cylindrical Sealant Backing: ASTM C 1330, Type C, closed-cell polyethylene, in diameter greater than joint width.

2.3 FINISHES

A. Stainless-Steel Finishes:

1. Surface Preparation: Remove tool and die marks and stretch lines, or blend into finish.
2. Polished Finishes: Grind and polish surfaces to produce uniform finish, free of cross scratches.

   a. Run grain of directional finishes with long dimension of each piece.
   b. When polishing is completed, passivate and rinse surfaces. Remove embedded foreign matter and leave surfaces chemically clean.

B. Powder-Coat Finishes: Immediately after cleaning and pretreating, electrostatically apply manufacturer's standard, baked-polymer, thermosetting powder finish. Comply with resin manufacturer's written instructions for application, baking, and minimum dry film thickness.

PART 3 - EXECUTION

3.1 INSTALLATION

A. Install equipment level and plumb, according to manufacturer's written instructions.

1. Connect equipment to utilities.
2. Provide cutouts in equipment, neatly formed, where required to run service lines through equipment to make final connections.

B. Complete equipment assembly where field assembly is required.

1. Provide closed butt and contact joints that do not require a filler.
2. Grind field welds on stainless-steel equipment until smooth and polish to match adjacent finish.

C. Install equipment with access and maintenance clearances that comply with manufacturer's written installation instructions and with requirements of authorities having jurisdiction.

D. Install cabinets and similar equipment on bases in a bed of sealant.

E. Install closure-trim strips and similar items requiring fasteners in a bed of sealant.

F. Install joint sealant in joints between equipment and abutting surfaces with continuous joint backing unless otherwise indicated. Produce airtight, watertight, vermin-proof, sanitary joints.

3.2 CLEANING AND PROTECTING

A. After completing installation of equipment, repair damaged finishes.

B. Clean and adjust equipment as required to produce ready-for-use condition.

C. Protect equipment from damage during remainder of the construction period.

3.3 DEMONSTRATION

A. Engage a factory-authorized service representative to train Owner's maintenance personnel to adjust, operate, and maintain the kitchen equipment.

3.4 APPENDIX A – Bargreen-Ellingson Quote.

END OF SECTION

St. Andrew's Catholic Church - 1.24.20 Quote

BARGREEN ELLINGSON
FOODSERVICE SUPPLY & DESIGN

PROJECT
St. Andrew's Catholic
Church - 1.24.20

FROM
Bargreen Ellingson-
Washington
Joshua Pearce
6626 Tacoma Mall Blvd
Tacoma, WA 98409
253.475.9201

Date: 01/24/2020
Project Code: 106498

Please accept the following proposal for your consideration. Prices are valid for orders placed by 6.30.2020, are quoted FOB factory and based on provided drawings dated January 15th, 2020. Owner is responsible for all permits and applicable taxes.

Item	Qty	Description	Sell	Sell Total
1	1 ea	**Mobile Heated Cabinet**	**$4,204.00**	**$4,204.00**
		*Alto-Shaam Model No. 1000-UP* Halo Heat® Heated Holding Cabinet, mobile, double-compartment, on/off simple control with adjustable thermostats, insulated, capacity for (8) 18" x 26" x 1" sheet pans in each compartment, heavy-duty stainless steel exterior and interior, 5" heavy-duty casters; 2 rigid, 2 swivel with brake, EcoSmart®, cULus, UL EPH ANSI/NSF 4, CE, IPX4, TUV NORD		
	1 ea	NOTE: Subject to Manufacturer's Terms & Conditions. See Documents Section		
	1 ea	120v/60/1-ph, 16.0 amps, 1.9kW, 9' cord, NEMA 5-20P		
	1 ea	Solid state electronic control, LED display, with patented SureTemp heat recovery system	**$633.00**	**$633.00**
	2 ea	Solid door, hinged on right, standard		
	1 ea	1775 Water Reservoir Pan, for proofing	**$96.00**	**$96.00**
			ITEM TOTAL:	**$4,933.00**
2	1 ea	**Convection Oven, Gas**	**$4,457.00**	**$4,457.00**
		*Blodgett Oven Model No. ZEPH-100-G SGL* Zephaire Convection Oven, gas, single-deck, standard depth, capacity (5) 18" x 26" pans, (SSI-D) solid state infinite controls with digital timer, two speed fan, dependent glass doors, interior light, stainless steel front, sides and top, 25" stainless steel legs, 50,000 BTU, ETL, NSF		
	1 ea	2 year parts, 2 year labor and 1 additional year door warranty (parts only), standard		
	1 ea	Start-Up option to all the convection and deck ovens (Does not included assembly or installation of any components)	**$313.00**	**$313.00**
	1 ea	Gas type to be determined		
	1 ea	115v/60/1-ph, 6.0 amps, 2-wire with ground, cord & plug, 1/2 hp, standard		
	1 ea	SSI-D Solid State infinite with digital timer, standard		
	1 ea	Venting to be determined		

Item	Qty	Description	Sell	Sell Total
	1 st	25" legs, adjustable, stainless steel (set), standard		
	1 ea	6" stem casters	**$265.00**	**$265.00**
	1 kt	Dormont 1675KIT48 Dormont Blue Hose™ Moveable Gas Connector Kit, 3/4" inside dia., 48" long, covered with stainless steel braid, coated with blue antimicrobial PVC, (1) SnapFast® QD, (1) full port valve, (2) 90° elbows, (1) Snap'N Go, coiled restraining cable with hardware, 180,000 BTU/hr minimum flow capacity, limited lifetime warranty	**$160.00**	**$160.00**
			ITEM TOTAL:	**$5,195.00**
3	1 ea	**CUSTOM** *Custom Model No. WORK TABLE* 16GA T304 stainless steel Work Table, 120"W x 42"D x 36"H, 2" turn down on all sides, fixed 18ga s/s under shelf , adjustable bullet feet (1) 16" x 20" x 12" deep sink bowl, 3-1/2" die stamped drain hole (1) 10" x 14" x 10" deep sink bowl, 3-1/2" die stamped drain hole faucet by others 3/16" x 2"Oval pot rack, with utensil bar, table mounted, (1) stainless steel pot hook per foot	**$3,623.00**	**$3,623.00**
			ITEM TOTAL:	**$3,623.00**
3.1	1 ea	**Deck Mount Faucet** *T&S Brass Model No. B-1123-CR* Faucet Workboard, swivel, deck mount, 12" long, standard, 8" centers, lever handles, cerama cartridges, check valves, includes: lock washer (014200-45), 2.2 GPM aerator, low-lead, polished chrome, 1/2" male NPT, ADA Compliant, ANSI, NSF	**$112.00**	**$112.00**
	2 ea	B-WH4 Wrist Action Handle	**$22.00**	**$44.00**
			ITEM TOTAL:	**$156.00**
3.2	1 ea	**Deck Mount Faucet** *T&S Brass Model No. B-1141* Faucet, gooseneck nozzle, deck mount	**$104.00**	**$104.00**
	2 ea	B-WH4 Wrist Action Handle	**$22.00**	**$44.00**
	1 kt	B-0230-K Installation Kit, (2) 1/2" NPT nipples, lock nuts & washers, (2) short "Ell" 1/2" NPT female x male	**$29.00**	**$29.00**
			ITEM TOTAL:	**$177.00**
4	1 ea	**Range, 36", 6 Open Burners** *Southbend Model No. 4361D* Ultimate Restaurant Range, gas, 36", (6) non-clog burners, standard grates, standing pilot, (1) standard oven with battery spark ignition, includes (1) rack, 22-1/2" flue riser with shelf, stainless steel front, sides, shelf & 6" adjustable legs, 243,000 BTU, CSA, NSF (Note: Qualifies for Southbend's Service First™ Program, see Service First document for details)	**$4,203.00**	**$4,203.00**
	1 ea	Domestic Shipping, inside of North America		
	1 ea	Standard one year limited warranty (range)		

Item	Qty	Description	Sell	Sell Total
	1 ea	NOTE: 22.5" high flue riser, with heavy duty shelf, standard		
	1 ea	Specify Gas Type		
	1 ea	Flame failure, for type 1 & 2 open top burners, 2 & 3 foot manual griddles only (does not include spark ignition option)	**$497.00**	**$497.00**
	1 ea	Battery spark ignition (for open top burners, charbroilers, hot tops and griddles)	**$127.00**	**$127.00**
			ITEM TOTAL:	**$4,827.00**
4.1	1 ea	**Faucet, Kettle / Pot Filler** *T&S Brass Model No. B-0292* Big-Flo Pot & Kettle Sink Faucet, wall mount, 8" centers, 3/4" IPS model LL street EL inlets with locknuts, 24" double-jointed swing nozzle, 175°F four arm handles, 1-1/4" dia. holes required in backsplash	**$380.00**	**$380.00**
			ITEM TOTAL:	**$380.00**
5	1 ea	**Range, 36" Thermostatic Griddle** *Southbend Model No. 436C-3T* Ultimate Restaurant Range, gas, 36", griddle, thermostatic controls, standing pilot, (1) cabinet base, 22-1/2" flue riser with shelf, stainless steel front, sides, shelf & 6" adjustable legs, 64,000 BTU, cCSAus, CSA Flame, CSA Star, NSF (Note: Qualifies for Southbend's Service First™ Program, see Service First document for details)	**$6,480.00**	**$6,480.00**
	1 ea	Domestic Shipping, inside of North America		
	1 ea	Standard one year limited warranty (range)		
	1 ea	NOTE: 22.5" high flue riser, with heavy duty shelf, standard		
	1 ea	Specify Gas Type		
	1 ea	Battery spark ignition (for open top burners, charbroilers, hot tops and griddles)	**$127.00**	**$127.00**
			ITEM TOTAL:	**$6,607.00**
6	1 ea	**TYPE I HOOD** *Captive-Aire Model No. TYPE 1 HOOD* TYPE I HOOD W/ RIGHT SIDE UTILITY CABINET 10' 6" hood w/ 12" utility cabinet	**$4,109.00**	**$4,109.00**
	1 ea	HOOD CONTROLS	**$2,468.00**	**$2,468.00**
			ITEM TOTAL:	**$6,577.00**
6.1	1 ea	**MAKE UP AIR** *Captive-Aire Model No. MAKE UP AIR & DUCTING* MAKE UP AIR & DUCTING NON-COOLED (NON DX SYSTEM)	**$6,112.00**	**$6,112.00**
			ITEM TOTAL:	**$6,112.00**
6.2	1 ea	**EXHUAST FAN & DUCTING** *Captive-Aire Model No. EXHUAST FAN & DUCTING* EXHUAST FAN & DUCTING	**$1,798.00**	**$1,798.00**
			ITEM TOTAL:	**$1,798.00**
6.3	1 ea	**FIRE SUPPRESION** *Captive-Aire Model No. FIRE SUPPRESION* FIRE SUPPRESION	**$2,389.00**	**$2,389.00**
			ITEM TOTAL:	**$2,389.00**

Item	Qty	Description	Sell	Sell Total
6.4	1 ea	**ENCLOSURE PANEL(S)** *Captive-Aire Model No. ENCLOSURE PANEL(S)* 18ga T304 s/s Hood Enclosure, 54" x 138" x 54" long, up to 24" H	**$538.00**	**$538.00**
			ITEM TOTAL:	**$538.00**
6.5	1 ea	**WALL FLASHING** *Captive-Aire Model No. WALL FLASHING* 20 ga T304 stainless steel wall flashing 138"L x 78" H, T and J molding included	**$794.00**	**$794.00**
			ITEM TOTAL:	**$794.00**
7	1 ea	**WORK TABLE CABINET BASE** *Custom Model No. WORK TABLE CABINET BASE* Work Table Cabinet base, 22" W x 30"D x 36"H, 4" x 1" back splash, 2" turn down on front and sides, 16 ga T304 stainless steel top, 18 ga. stainless steel body, open base, s/s legs with 1" adjustable feet, NSF	**$943.00**	**$943.00**
			ITEM TOTAL:	**$943.00**
8	1 ea	**Reach-In Refrigerator** *True Manufacturing Co., Inc. Model No. T-43-HC* Refrigerator, reach-in, two-section, stainless steel doors, (6) PVC coated adjustable wire shelves, interior lighting, stainless steel front, aluminum sides, aluminum interior with stainless steel floor, 4" castors, R290 Hydrocarbon refrigerant, 1/2 HP, 115v/60/1-ph, 5.4 amps, NEMA 5-15P, cULus, UL EPH Classified, Made in USA, ENERGY STAR®	**$4,221.00**	**$4,221.00**
	1 ea	Self-contained refrigeration standard		
	1 ea	Warranty - 5 year compressor (self-contained only), please visit www.Truemfg.com for specifics		
	1 ea	4" stem castors, standard (adds 5" to OA height)		
	1 ea	Warranty - 3 year parts and labor, please visit www.Truemfg.com for specifics		
	1 ea	Left door hinged left, right door hinged right standard		
			ITEM TOTAL:	**$4,221.00**
9	1 ea	**Reach-In Freezer** *True Manufacturing Co., Inc. Model No. T-23F-HC* Freezer, reach-in, one-section, -10°F, (1) solid door, (3) PVC coated adjustable wire shelves, interior lighting, stainless steel door, stainless steel front, aluminum sides, clear coated aluminum interior with stainless steel floor, 4" castors, R290 Hydrocarbon refrigerant, 1/2 HP, 115v/60/1-ph, 3.7 amps, NEMA 5-15P, cULus, UL EPH Classified, Made in USA, ENERGY STAR®	**$4,295.00**	**$4,295.00**
	1 ea	Self-contained refrigeration standard		
	1 ea	Warranty - 5 year compressor (self-contained only), please visit www.Truemfg.com for specifics		
	1 ea	4" stem castors, standard (adds 5" to OA height)		
	1 ea	Warranty - 3 year parts and labor, please visit www.Truemfg.com for specifics		
	1 ea	Door hinged right standard		
			ITEM TOTAL:	**$4,295.00**
10	1 ea	**CUSTOM** *Custom Model No. MOP SINK CABINET* Mop Sink Cabinet, double width, 35-1/2"W x 22-1/4"D x 84-1/4"H, slanted top, holds (2) mops, (1) hinged door w/ lock, 8" deep mop sink	**$2,788.00**	**$2,788.00**

Item	Qty	Description	Sell	Sell Total
		, (1) fixed shelf above mop sink, , includes spray hose bracket, 430 stainless steel construction.		
			ITEM TOTAL:	**$2,788.00**
10.1	1 ea	**Service Faucet** *T&S Brass Model No. B-0363* Service Sink Faucet, wall mount, 8" centers, vacuum breaker, 6" wrist handles, built-in stops	**$498.00**	**$498.00**
	1 kt	B-0230-K Installation Kit, (2) 1/2" NPT nipples, lock nuts & washers, (2) short "Ell" 1/2" NPT female x male	**$31.00**	**$31.00**
			ITEM TOTAL:	**$529.00**
10.2	1 ea	**CUSTOM** *Custom Model No. CHEMICAL SHELF W/ MOP HOLDER* CUSTOM, CHEMICAL SHELF W/ MOP HOLDER INCLUDED IN ITEM # 10 (MOP SINK CABINET) **INCLUDED IN #10**		
11	1 ea	**FUTURE** *Hoshizaki Model No. KM-660MAJ* Ice Maker, Cube-Style, 22"W, air-cooled, self-contained condenser, production capacity up to 665 lb/24 hours at 70°/50° (617 lb AHRI certified at 90°/70°), stainless steel finish, crescent cube Style, R-404A refrigerant, 115v/60/1-ph, 15.2 amps, NSF, UL	**$3,719.00**	**<Optional>**
	1 ea	Warranty: 3-Year parts & labor on entire machine		**<Optional>**
	1 ea	Warranty: 5-Year parts & labor on evaporator		**<Optional>**
	1 ea	Warranty: 5-Year parts on compressor & air-cooled condenser		**<Optional>**
	1 ea	B-500PF Ice Bin, 30"W, top-hinged front-opening door, 500-lb ice storage capacity, for top-mounted ice maker, vinyl clad, painted legs included, protected with H-GUARD Plus Antimicrobial Agent, ETL, ETL-Sanitation	**$1,106.00**	**<Optional>**
	1 ea	Warranty: 3-Year parts & labor for bin		**<Optional>**
	1 kt	HS-2033 Top Kit, 8", ABS	**$118.00**	**<Optional>**
			ITEM TOTAL: <Optional>	**$4,943.00**
11.1	1 ea	**FLOOR TROUGH** *FS Fabco Model No. FSFT2412-SSG* FS FABCO Model No. FSFT2412-SSG APPROX. 36"X12"X4"D FLOOR TROUGH W/ 3/16"X1" S/S SUBWAY GRATE, 14GA S/S, TYPE 304, PITCH TO D34-Y011 3-1/8" OD TAIL PIECE DRAIN W/ BASKET.	**$1,213.00**	**$1,213.00**
			ITEM TOTAL:	**$1,213.00**
11.2	1 ea	**FUTURE**	**$350.00**	**$350.00**

Item	Qty	Description	Sell	Sell Total
		*Everpure Model No. EV929302* Coldrink®/Insurice® Manifold, twin, 10" prefilter head, for fountain, ice, coffee and tea machines, built-in water pressure gauge, includes: mounting box bracket & screws, pre-filter cartridge, 3/4" NPT		
	2 ea	EV969331 Everpure® 4FC5-S Replacement Cartridge, 15,000 gallon capacity, 2.5 gpm flow rate, 5 micron rating, scale inhibitor, reduces chlorine taste & odor, NSF	**$94.00**	**$188.00**
			ITEM TOTAL:	**$538.00**
12	1 lt	**SHELVING** *Focus Foodservice (see Crown Brands) Model No. DRY STORAGE SHELVING* *Packed lt* DRY STORAGE SHELVING		
	15 ea	Centaur C2448K Centaur®K Series Shelving, wire, 48"W x 24"D, green epoxy, NSF	**$32.00**	**$480.00**
	5 ea	Centaur C1842K Centaur®K Series Shelving, wire, 42"W x 18"D, green epoxy, NSF	**$24.00**	**$120.00**
	20 ea	Centaur C74K Centaur® Stationary Post, 74-5/8"H, with leveling bolt & cap, green epoxy	**$9.00**	**$180.00**
			ITEM TOTAL:	**$780.00**
12.1	1 ea	**POT AND PAN SHELVING** *Focus Foodservice (see Crown Brands) Model No. POT AND PAN SHELVING* POT AND PAN SHELVING		
	4 ea	Centaur C1836K Centaur®K Series Shelving, wire, 36"W x 18"D, green epoxy, NSF	**$21.00**	**$84.00**
	4 ea	Centaur C74K Centaur® Stationary Post, 74-5/8"H, with leveling bolt & cap, green epoxy	**$9.00**	**$36.00**
			ITEM TOTAL:	**$120.00**
13	1 ea	**Hand Sink**	**$313.00**	**$313.00**
		*Advance Tabco Model No. 7-PS-20* Hand Sink, wall mounted, 14" wide x 10" front-to-back x 5" deep bowl, 20 gauge 304 stainless steel, with deck mounted fixed faucet, basket drain, NSF, cCSAus		
	1 ea	K-316-LU Wrist Handles Only, for splash or deck mount hand sink faucet (1 pair hot & cold 4" long blades), fits faucets supplied after November 2015 with hot & cold color rings that do not have exposed screw head	**$55.00**	**$55.00**
	1 ea	7-PS-17B Welded Side Splash, 7-3/4"H (installed height), both sides, for hand sinks with 10" x 14" bowl & deck mounted faucets	**$239.00**	**$239.00**
	1 ea	7-PS-35 Paper Towel Dispenser, wall mounted, locking, 11"W x 4"D x 15"H, for use with "C" fold towels, paper towel level indicator, satin finish stainless steel. includes (2) keys & mounting hardware	**$153.00**	**$153.00**
	1 ea	7-PS-12 Soap Dispenser, wall mounted, 3-1/2"W x 3"D x 8-1/2"H, 20 oz. smoked plastic liquid soap reservoir, push button dispensing, chrome plated plastic body, includes: adhesive strip & mounting bracket	**$83.00**	**$83.00**
			ITEM TOTAL:	**$843.00**

Item	Qty	Description	Sell	Sell Total
14	1 ea	**CUSTOM** *Custom Model No. CLEAN DISHTABLE* 16 ga T304 s/s Clean Dishtable, (Left D/M connection) 105" W x 30" D x 34" H, 10" x 2" back splash, 2-1/2" Rolled edges, s/s legs with adjustable feet left end splash (3) 18" x 24" x 14" deep sink bowls, 3-1/2" die stamped drain holes (2) 8" o/c faucet holes (faucet by others) (3) rack slides	**$2,671.00**	**$2,671.00**
			ITEM TOTAL:	**$2,671.00**
14.1	1 ea	**Pre-Rinse Faucet Assembly, with Add On Faucet** *T&S Brass Model No. B-0133-12-CR-B* EasyInstall Pre-Rinse Unit, spring action gooseneck, 8" wall mount, spray valve (B-0107), 12" add-on faucet, ceramic faucet, wall bracket	**$424.00**	**$424.00**
	1 kt	B-0230-K Installation Kit, (2) 1/2" NPT nipples, lock nuts & washers, (2) short "Ell" 1/2" NPT female x male	**$31.00**	**$31.00**
			ITEM TOTAL:	**$455.00**
14.2	1 ea	**CUSTOM** *Custom Model No. DISHTABLE SORTING SHELF* Slanted Rack Shelf, wall mount, 63"W, holds 3 glass/dish racks, 18/300 series stainless steel, includes wall brackets	**$250.00**	**$250.00**
			ITEM TOTAL:	**$250.00**
14.3	1 ea	**Wall / Splash Mount Faucet** *T&S Brass Model No. B-0231* Sink Mixing Faucet, 12" swing nozzle, wall mounted, 8" centers on sink faucet with 1/2" IPS eccentric flanged female inlets, lever handles	**$140.00**	**$140.00**
	1 kt	B-0230-K Installation Kit, (2) 1/2" NPT nipples, lock nuts & washers, (2) short "Ell" 1/2" NPT female x male	**$31.00**	**$31.00**
			ITEM TOTAL:	**$171.00**
15	2 ea	**Dish Cart / Dolly** *Cambro Model No. ADCSC480* S-Series Dish Caddy, 27"W x 27"D x 31-3/4"H, compact, adjustable, (4) CamLever towers, (2) molded in top handles, recessed handles on all sides, minimum dish size 9", maximum dish size 12", 500 lb. capacity, 360° maneuvering, includes vinyl cover with identification pocket, (4) 5" non-marking swivel casters with brake, one piece molded body, polyethylene, speckled gray, NSF	**$647.00**	**$1,294.00**
			ITEM TOTAL:	**$1,294.00**
16	2 ea	**Rack Dolly**	**$67.00**	**$134.00**

Item	Qty	Description	Sell	Sell Total
		*Carlisle Model No. C223603* Opticlean™ Glass Rack Dolly, 350 lb. capacity, without handle, platform design with drain feature, single-stack, accommodates standard full-size racks, (4) 4" ball bearing swivel casters with non-marking rubber wheels, polypropylene, black		
			ITEM TOTAL:	**$134.00**
17	1 ea	**Dishwasher, Door Type, Ventless**	**$16,564.00**	**$16,564.00**
		*Hobart Model No. AM15VL+BUILDUP* Ventless Door Type Dishwasher, Energy Recovery, hot water sanitize, internal condensing system, 40 racks/hr, Straight-thru or corner, solid-state controls with digital status, booster heater, electric tank heat, auto-fill, stainless steel tank, doors & feet,ENERGY STAR®, Free factory startup for installations within a 50 mile radius of a Hobart service office; installation beyond 50 miles will be charged at the quoted rate by the local Hobart service office		
	1 ea	Standard warranty - 1-Year parts, labor & travel time during normal working hours within the USA		
	1 ea	AM15VL-ELE0EU 208-240v/60/3-ph		
	1 ea	AM15VL-HTEELE Electric heat		
	1 ea	AM15VL-BSTYES With electric booster		
	1 ea	SINGLE-POINT Single Point Electrical Connection (factory installed, 3 phase booster machines only)	**$521.00**	**$521.00**
	1 ea	DOOR LOCK NO Without Door lock		
			ITEM TOTAL:	**$17,085.00**
17.1	1 ea	**FLOOR TROUGH**	**$1,493.00**	**$1,493.00**
		FS Fabco Model No. FSFT4812-SSG FS FABCO Model No. FSFT4812-SSG APPROX. 48"X12"X4"D FLOOR TROUGH W/ 3/16"X1" S/S SUBWAY GRATE, 14GA S/S, TYPE 304, PITCH TO D34-Y011 3-1/8" OD TAIL PIECE DRAIN W/ BASKET.		
			ITEM TOTAL:	**$1,493.00**
18	1 ea	**CUSTOM**	**$2,203.00**	**$2,203.00**
		Custom Model No. SOILED DISHTABLE 16 ga T304 s/s Soiled Dishtable, (Right D/M connection) 105" W x 30" D x 34" H, 10" x 2" back splash, 2-1/2" Rolled edges, s/s legs with adjustable feet Right end splash (1) 20" x 20" x 6" deep sink bowl, 3-1/2" die stamped drain hole (1) scrap basket with slides Faucet by others Pass Thru with Roll down provisions		
			ITEM TOTAL:	**$2,203.00**
18.1	1 ea	**Pre-Rinse Faucet Assembly**	**$321.00**	**$321.00**

Item	Qty	Description	Sell	Sell Total
		*T&S Brass Model No. B-0113-B* EasyInstall Pre-Rinse Unit, spring action gooseneck & hole base faucet, 18" flexible stainless steel supply lines with comp. fittings for 5/8" OD copper tubing, 45"H, 14" overhang, 19-3/8" clearance, 24" riser, spray valve (B-0107), stainless steel hose (B-0044-H) & 6" wall bracket		
	1 ea	B-0230-K Installation Kit, (2) 1/2" NPT nipples, lock nuts & washers, (2) short "Ell" 1/2" NPT female x male	**$31.00**	**$31.00**
			ITEM TOTAL:	**$352.00**
19		**Spare No.**		
20	1 ea	**CUSTOM** *Custom Model No. WORK TABLE* 16GA T304 stainless steel Work Table, 132"W x 30"D x 36"H, 4" x 1" back splash, 2" turn down on front and sides, X-bracing , adjustable bullet feet	**$1,836.00**	**$1,836.00**
			ITEM TOTAL:	**$1,836.00**
21	1 ea	**CUSTOM** *Custom Model No. WORK TABLE* 16GA T304 stainless steel Work Table, 120"W x 30"D x 36"H, 4" x 1" back splash, 2" turn down on front and sides, 18 ga s/s undershelf, adjustable bullet feet (4) 15" x 20" x 5" drawers, plastic liners	**$2,694.00**	**$2,694.00**
			ITEM TOTAL:	**$2,694.00**
22	2 ea	**Coffee Brewer** *Grindmaster-Cecilware Model No. B-SAP* PrecisionBrew® Coffee Brewer, automatic fill with pourover option, single brewer for 2.2 L airpot (airpots sold separately), digital controls, sleep mode, programmable pulse brewing/pre-infusion, hot water faucet, stainless steel brew basket, stainless steel construction, UL, NSF (Grindmaster)	**$704.00**	**$1,408.00**
				
	2 ea	2 years parts & 1 year labor warranty, standard		
	2 ea	Grindmaster-Cecilware warranties are conditional on required preventive maintenance. Grindmaster-Cecilware must receive proof of required preventive maintenance performed to activate second year warranty.		
	2 ea	120v/60/1-ph, 1.8 kW, cord & NEMA 5-15P, standard		
			ITEM TOTAL:	**$1,408.00**
23	2 ea	**Hot Food Serving Counter / Table** *Vollrath Model No. 36140* Signature Server® Hot Food Serving Counter, 60"W x 28"D x 30"H, 18/300 stainless steel top with 1" turndown on all sides, (4) 12" x 20" x 6-3/8" deep wells with 625 watt elements, individual Touch-Temp® programmable controls, enclosed base, 18/400 series stainless steel unibody construction, pull-out ball valve drain, 2500 watts, cord, plug, cULus, NSF, Made in USA	**$4,958.00**	**$9,916.00**
				
	2 ea	1 year warranty against defects in materials & workmanship		
	2 ea	120v/60/1-ph		
	2 ea	STANDARD BLACK Black Laminate, standard, nc		
	2 ea	No breath guard		

Item	Qty	Description	Sell	Sell Total
	2 st	SS4CASTERS Signature Server® Swivel Casters, 4"H, (2) braked, standard		
			ITEM TOTAL:	**$9,916.00**
24	1 ea	**SECURITY** *BY OTHERS Model No. ROLL DOWN DOOR* ROLL DOWN DOOR		
24.1	1 ea	**CUSTOM** *BY OTHERS Model No. CHANNEL GUARD* CUSTOM, CHANNEL GUARD FOR ROLL DOWN DOOR		
25	6 ea	**Airpot** *Grindmaster-Cecilware Model No. AP-3* Push Top Airpot, 3.0 L (101 oz.), glass liner, stainless steel with black push top, ETL-Sanitation (Grindmaster)	**$67.00**	**$402.00**
			ITEM TOTAL:	**$402.00**
26	1 ea	**Cart, Beverage** *Lakeside Manufacturing Model No. 672* Beverage Service Cart, Drop Leaves, (3) 15-1/2" x 24" interior shelves, plastic laminated top & leaves, stainless steel base & interior, 4" all swivel casters, Made in USA	**$1,731.00**	**$1,731.00**
	1 ea	Group 1 vinyl finish: Walnut, standard		
			ITEM TOTAL:	**$1,731.00**
LABOR	1 ea	**KITCHEN EQUIPMENT DELIVERY & SET IN PLACE** *Bargreen Ellingson* ALL LABOR QUOTED AS DAY TIME WORK WITH NON-PREVAILING WAGES		
	1 ea	LABOR KITCHEN EQUIPMENT DELIVER SET IN PLACE - RECEIVE AND SET IN PLACE ALL KEC PROVIDED EQUIPMENT - ALL STAINLESS STEEL WILL BE SUPPLIED AND FIELD WELDED TO FIT (IF NEEDED) BY OUR INSTALLERS - ONCE EQUIPMENT IS CONNECTED TO UTILITIES BY THE TRADES, BARGREEN WILL LEVEL, FASTEN, & SILICONE STAINLESS WORKS TO WALLS - ALL FINAL CLEANING WILL BE BY OTHERS	**$6,356.00**	**$6,356.00**
	1 ea	LABOR HOOD PACKAGE INSTALL - RECEIVING AND INSTALLMENT OF HOOD PACKAGE BASED ON 1.15.20 DWGS	**$10,707.00**	**$10,707.00**

Item	Qty	Description	Sell	Sell Total
		DOES NOT INCLUDE SEISMIC BRACING AND/OR SUPPORT CHANNELS LARGER THAN P1000T UNI STRUT AND 1/2" ROD TYPE INSTALL OF THE HOOD SYSTEM, ENGINEERING AND PERMITTING BY OTHERS		
	1 ea	RENTAL CRANE, MATERIAL LIFT(S) ETC.	**$1,253.00**	**$1,253.00**
	1 ea	LABOR FABRICATION OF DUCT SYSTEM INCLUDES - Fabrication of duct system for one 10'6" class one hood. - Fabricate and supply one exhaust duct run from the collar in the hood(shipped loose) to the roof through a curb and to the fan. - Duct wrap is included for this duct run (FIRE WRAP) - Fabricate and supply all MUA duct work from the down draft - MUA fan on the roof setting on its curb to hook up to the class one hoods PSP on the front NOTE: All hoods, fans, curbs and controls by others	**$11,825.00**	**$11,825.00**
	1 ea	MECHANICAL PERMITS INCLUDES; - Drawings, spec sheets , air calculations, equipment call out intake, pick up and permit fees for a class one hood system. NOTE: You will need to supply us with all required information the city requires for this permit to be done	**$2,769.00**	**$2,769.00**
	1 ea	FIRE SYSTEM HOOKUP MAKE FINAL CONNECTIONS FROM PREPIPED HOOD TO THE ANSUL TANKS IN UTILITY CABINET	**$3,811.00**	**$3,811.00**
	1 ea	HOOD BALANCING BALANCING THE AIR CIRCULATION BETWEEN THE MUA SUPPLY UNIT AND THE EXHAUST FAN SUCTION	**$1,063.00**	**$1,063.00**
	1 ea	CAPTIVE AIRE FACTORY SERVICES & CASLINK MONITORING INCLUDES; Service Design Verification for CASLink. Service Design Verification for Demand Control Ventilation Service Design Verification for Direct Fired Heater Service Design Verification for Exhaust Fan Service Design Verification for Hood Service Design Verification for Site Meeting w/ additional mileage charge. Service Design Verification Mileage Charge: (49) x 2 = 98 total miles	**$1,751.00**	**$1,751.00**
			ITEM TOTAL:	**$39,535.00**
MISC EXCLUSIO	1 ea	**EXCLUSIONS**		

Item	Qty	Description	Sell	Sell Total
NS		*Bargreen Ellingson Model No. EXCLUSIONS* MISC EXCLUSIONS; MISC EXCLUSIONS; - BUILDING PERMITS - BUILDING PENETRATIONS - BUILDING SCREENING		
FREIGHT	1 ea	**IN BOUND FREIGHT** *Bargreen Ellingson Model No. FREIGHT* FREIGHT INCLUDES;	**$2,141.00**	**$2,141.00**
	1 ea	CAPTIVE AIRE CAPTIVEAIRE FREIGHT	**$1,034.00**	**$1,034.00**
	1 ea	FS Fabco FABCO	**$1,333.00**	**$1,333.00**
			ITEM TOTAL:	**$4,508.00**
CONTINGENCY (A)	1 ea	**CONTINGENCY** *Bargreen Ellingson Model No. CONTINGENCY (EQUIPMENT)* CONTINGENCY factored @ 10%	**$14,902.00**	**$14,902.00**
			ITEM TOTAL:	**$14,902.00**
CONTINGENCY (B)	1 ea	**CONTINGENCY** *Bargreen Ellingson Model No. CONTINGENCY (SMALL WARES)* CONTINGENCY FOR SMALLWARES This was factored for all new small wares for the facility Can provide a detailed list if requested	**$50,000.00**	**<Optional>**
			ITEM TOTAL: <Optional>	**Total not carried forward**

Merchandise	**$163,416.00**
Freight	
Tax 9.3%	**$15,197.69**
Total	**$178,613.69**

PRICE PROTECTION: This pricing will remain firm for a period not to exceed 30 days from the date of Quote.
EXCLUDES: Electrical & Plumbing Hook-up/Installation as Bargreen-Ellingson is not a Licensed Contractor.
NOTE: Items that are being special ordered for this project may not be returned unless agreed to under separate written contract & are subject to a minimum 25% restocking fee plus freight charges both ways.

CUSTOMER COMMITMENT: In foodservice, things don't always go as planned. When those things happen, Bargreen Ellingson is committed to make it right. Our staff is given the power to resolve your issue. If they cannot, or if you are not completely satisfied, we encourage you to call our President, David Ellingson, at (253) 234-1400. Thank you for the opportunity to serve you!

Thank you for your business!

Acceptance: _____ Date: _____

Printed Name: _____

Project Grand Total: $178,613.69

SECTION 11 66 23 - SPORTS EQUIPMENT SYSTEMS

PART 1 - GENERAL

1.1 SUMMARY

A. Section includes: Volleyball equipment for gymnasiums and other interior installations:
   1. Floor sleeves and cover plates.
   2. Floor anchors.
   3. Telescoping standards.
   4. Volleyball nets, rope tensioners, boundary markers, and antennae.
   5. Basket Ball wall Mounted Backstop and Rim.

1.2 REFERENCES

A. ASTM A500 - Formed Welded Seamless Structural Tubing in Rounds and Shapes.

B. ASTM B85 - Aluminum-Alloy Die Castings.

C. ASTM B221 - Aluminum-Alloy Extruded Bar, Rod, Wire, Shape, and Tube

1.3 SUBMITTALS

A. Submit in accordance with Section 013300 - Submittal Procedures:
   1. List of proposed products and product data.
   2. Shop drawings showing volleyball court layout and floor sleeve locations, dimensions, and method of installation.
   3. Shop drawings showing Basketball Backstop mounting and court dimension layout.
   4. Manufacturer's installation instructions.

1.4 QUALITY ASSURANCE

A. All sports equipment, components, and accessories shall be products of a single manufacturer.

PART 2 - PRODUCTS

2.1 ACCEPTABLE MAUNFACTURERS

A. Draper, Inc., 411 South Pearl Street, Spiceland, Indiana 47385-0425; 765-987-7999 or as approved by owner.

2.2 MATERIALS

A. Structural steel tubing: Steel, mechanical, round tubing conforming to ASTM A500.

B. Extruded aluminum tubing: Schedule 80, ASTM B221, alloy 6063 Temper T5.

C. Aluminum castings: ASTM B85.

2.3 FLOOR SLEEVES AND COVERS

A. Floor sleeve: Round, mechanical steel tube sleeve welded to steel anchor plate for casting in concrete floor to receive volleyball standard; Floor Sleeve 501006 as manufactured by Draper, Inc.

B. Size: 3 inches inside diameter by 10 inches tube and 4 inches square anchor plate.

C. Cover plate: Cast aluminum 5 inches diameter chrome plated cover; Cover Plate 501001 as manufactured by Draper, Inc.
   1. Equip cover with swivel type retaining screw and key to open and lock cover.

2.4 FLOOR ANCHORS

A. Type: Floor anchor to be recessed in concrete floor slab with modular athletic flooring and used for securing portable game standards; Model 501012 Floor Anchor as manufactured by Draper, Inc.

B. Construction: Chrome plated, one-piece anchor with spring-loaded flush fairings and adjustment bolt and nut and designed for installation in concrete slab with fast setting grout.

C. Size: 4-11/16 inches long by 1-1/2 inches diameter.

2.5 TELESCOPING ALUMINUM STANDARDS

A. Types: Telescoping standards fabricated from Schedule 80 aluminum bottom and upper tubes and capable of adjusting from 73 inches to 100 inches in 1 inch increments to meet all age group height settings.
   1. Standard PVS-01 500001 as manufactured by Draper, Inc.: Pair of standards, one with tensioning winch and other with adjustable cable anchoring collar. Both standards equipped with single pulley sheave on upper telescoping tube section.
   2. Center Standard System 500002: 3 Post system, center standard equipped with two pulley sheaves on upper telescoping tube section spaced to accommodate two opposing net cables. Provide adjustable cable anchor collar to accommodate two nets.

B. Bottom tube section: 3-1/2 inches diameter with 0.30 inch wall thickness, 72 inches high. Bottom provided with rubber foot to protect floors.

C. Upper telescoping tube section: 2-7/8 inches diameter with 0.28 inch wall thickness.

D. Pulley sheaves: 4 inches diameter pulley and oilite bushing attached to top of upper telescoping tube.

E. Tensioning winch: Heavy-duty, self-locking worm-gear mechanism.
   1. Position winch on outside of bottom tube.
   2. Equip winch with 2 inches wide, high tensile nylon strap with sling ring and spring-hook for connection to net cable.
   3. Winch operated by folding handle.

2.6 VOLLYBALL NET

A. Type: Fabricated from high quality No. 36 black nylon cord woven in 4 inches square mesh; Net 500014 as manufactured by Draper, Inc.

B. Size: 32 feet long by 39-3/8 inches high.

C. Provide double stitched, vinyl coated polyester hem around perimeter of net. At net ends, provide hem with pocket containing 1/2 inch diameter fiberglass dowel.

D. Net cable: 1/8 inch diameter, 2000 pounds minimum breaking strength, galvanized aircraft cable with nylon coating. Equip ends with loops formed with heavy swadged type fittings. Run cable through top hem.

E. Rope tensioner: Provide bottom hem with 1/4 inch braided nylon rope and spring loaded tensioner; 500005 as manufactured by Draper, Inc.

F. Provide each net end with three 1 inch wide polypropylene tension straps with buckles for tightening net.

G. Combination Boundary Markers and Antennae: Pair of 2 inches wide, white, polyester reinforced vinyl strips to attach with snap fasteners to ends of net at boundary lines; Pair of 3/8 inch diameter fiberglass rods with red and white strips to extend above net 32-1/2 inches; 500016 Boundary Markers and Antenna as manufactured by Draper, Inc.

2.7 VOLLYBALL ACCESSORIES

A. Wall storage hooks: Pair of steel hooks mounted to wall with flat head screws to provide means for storing volleyball standards; Wall Hooks 501017 as manufactured by Draper, Inc.

2.8 WALL MOUNTED-STATIONARY BACKSTOP

A. Type: Stationary, wall mounted basketball backstop with direct mounted goal brace; Model EZ Fold SWD as manufactured by Draper, Inc.

B. Distance from face of backboard to supporting wall: 4’ feet at east and 7’ at west.

C. Support framework: Backstop mounted to wall at three fixed points with adjustable legs constructed from 2-1/2 inches diameter, 13 gage outer tube and 2-1/4 inches diameter, 14 gage inner tube.
   1. Two legs attached to top corners of backboard and one attached directly behind goal.
   2. Extension adjustment: Plus or minus inches.
   3. Wall anchor plates: 1/4 inch thick steel plates.
   4. Diagonal braces: 1-1/2 inches diameter, 11 gage steel tubes.
   5. Cross braces for top legs: ¼ by 1-1/4 inches flat steel bars.
   6. Powder coated finish: White.

D. Wall pads: Provide 2 by 8 inches southern yellow pine pads with chamfered edges and clear polyurethane finish for support frame and chain attachment points

2.9 BACKBOARD

A. Type: Rectangular, glass, smaller size backboard with center strut; Model 503137 as manufactured by Draper, Inc. This size requires a specific bolt pattern compatible between backboard and backstop.

B. Size: 54 inches wide by 40 inches high.

C. Construction: ½ inch thick fully tempered glass in extruded aluminum frame with mitered corners and vertical aluminum strut in center on back side to alleviate stress on glass. Provide steel gusset type mounting corner brackets with slots for mounting backboard to support structure.

D. Goal mounting assembly: Steel assembly secured to aluminum frame and equipped with steel sleeves through glass allowing rear structure to be secured to front mounting plate. Provide with holes and studs to secure backboard and goal directly to goal brace. Front plate provided with holes for goal attachment.

E. Equip frame and goal mounting assembly with neoprene shock absorbing cushions. Safe-edge padding standard grey color.

F. Permanently etch official white border and target area on front side of glass.

2.10 GOALS

A. Type: Heavy duty, front mounted goal fabricated from steel rod and steel plate; Model 503572 as manufactured by Draper, Inc.

B. Goal shall support 800 pounds at outer edge of ring and shall flex downward 2-3/4 inches without permanent damage.

C. Ring: Fabricated from 5/8 inch diameter high strength, cold drawn alloy steel rod formed into 18 inches ring. Provide with 12 no-tie net attachment clips welded to ring. Rigidly brace ring with 5/8 inch diameter high strength steel rod welded to mounting plate.

D. Mounting plate: 8 gauge steel plate bracket with mounting holes and designed to position inside of ring 6 inches from backboard.

E. Finish: Orange enamel.

F. Anti-whip net: Top half made of durable fibers encased in nylon to prevent net from whipping up on rim. Lower half all nylon. Color white.

G. Mounting hardware: Zinc plated.

2.11 HEIGHT ADJUSTER

A. Type: Mechanism for manually adjusting height of rectangular backboard and goal; Model 503092 Height Adjuster as manufactured by Draper, Inc.

B. Adjustment range: Goal position from 8 to 10 feet above court floor.

C. Construction: Steel angle frame attaching to backboard, double slip tube guide assembly, and required attachment hardware.

D. Operation: Provide 3/4 inch acme threaded rod and nut assembly, Timken bearing, and crank for manual operation.

2.12 SAFETY PADDING

A. Type: Foam padding for bottom edge and corners of backboard to provide safety protection to meet NCAA and NFHSA requirements; Model 503253 Safe-Edge Padding as manufactured by Draper, Inc.

B. Construction: Glue applied, open cell foam, 2 inches wide and wrapping around edges 3/4 inch. Padding shall cover bottom edge of backboard and extend 15 inches up sides.

C. Color: Gray.

2.13 BASKETBALL ACCESSORIES

A. Provide backstop with backstop hangers, clamps, brackets, fasteners, and all other hardware required for complete, functional, rigid assembly and installation.

PART 3 - EXECUTION

3.1 COORDINATION

A. Coordinate layout of sports courts and location of floor sleeves & anchors with installation of floor surfacing and application of game lines and boundaries.

B. Coordinate location of sleeves and required size of sleeve footing with trade responsible for placing concrete. Provide sleeves in adequate time to allow casting in concrete floor slabs. Ensure that setting of sleeve compensates for type of floor finish to be provided.

C. Ensure that sleeves for each court are spaced at 36'-0" on center.

D. Coordinate provision of basketball backstops with construction of [wall] [roof framing] supporting basketball backstop to ensure proper support and method of attachment.

E. Coordinate support of backstops to ensure proper distribution of loads and adequacy of attachment points. Provide additional structural framing members as required.

F. Coordinate electrical requirements for electrically operated height adjuster to ensure proper power source, conduit, wiring, and boxes for keyed switches.

G. Prior to installation, verify exact locations of backstops.

3.2 INSTALLATION

A. Floor anchors: Drill 1-1/4 inches diameter hole in concrete slab for each anchor. Accurately locate anchors based on court layout and approved shop drawings. Set anchor with fast setting grout. Ensure anchor is flush with floor finish. Let anchor set one week before using.

B. Floor cover plates: Install centered directly over floor sleeves in accordance with manufacturer's instructions. Route out floor to ensure cover is flush with finished floor. Install cover with flat head screws.

C. Install basketball backstops in accordance with approved shop drawings and manufacturer's instructions.

D. Install backstops, backboards, and goals plumb, level, and rigid. Attach to [wall] [roof] framing with anchors of size and type recommended by manufacturer.

E. Install backboards such that goal is 10 feet above court floor. After installing, verify that mounting height is correct.

F. Operate each backboard and goal height adjuster to ensure proper movement. Adjust mechanism as required to ensure smooth operation and accurate positioning.

3.3 FIELD QUALITY CONTROL

A. Insert standards in sleeves and attach nets, boundary markers, antennae, judges platform, protection padding, and other accessories. Verify that all items have been provided and are as required for complete installation.

B. Verify that standards are vertical and rigid. Verify net height settings are accurate.

C. Provide missing items and correct deficiencies.

3.4 CLEANING AND DEMONSTRATION

A. Remove protective wrappings and wash surfaces, and attach nets.

B. Review installed volleyball system with Owner's designated representatives. Demonstrate installation of equipment and operational features.

C. Submit operation and maintenance manuals in accordance with Section 01 78 23 – Operations and Maintenance Data and Section 01 77 00 - Closeout Procedures.

END OF SECTION

SECTION 12 20 00 – WINDOW TREATMENTS

PART 1 - GENERAL

1.1 SUMMARY

A. Provide window treatments at all locations indicated in drawings.

1.2 SUBMITTALS

A. Manufacturer's information on materials, components, and installation.

B. Shop Drawings showing layout.

1.3 WARRANTIES

A. Provide Manufacturer's 10 year warranty.

PART 2 - PRODUCTS

2.1 MATERIALS

A. Roller Shades: MechoShade Systems, Inc. as Basis of Design; manually operated, chain driven dual roller-screen system.
   1. MechoShade- EcoVeil open Basket Weave Solar Shade, 1350 series, 5% openness. Color: Shadow Grey 1370.
   2. Provide MechoShade dual shade with EcoVeil and Room Darkening Opaque type 0100 Series Graphite 0117.
   3. Accessories
      a. Provide integral fascia for roll housing.

PART 3 - EXECUTION

3.1 PREPARATION

A. Verify all dimensions in the field prior to fabrication.

3.2 INSTALLATION

A. Install blinds in accordance with manufacturer's instructions with units plumb, true, and securely anchored in place with recommended hardware and accessories for smooth easy operation.

B. Provide adequate clearance between blinds and sash to permit complete tilting and raising/lowering operation.

C. Adjust clearances and overlaps to ensure free operation.

D. Provide thorough cleaning of all window treatments at all rooms in the Work.

END OF SECTION

SECTION 12 30 00 - MANUFACTURED CASEWORK

PART 1 GENERAL

1.1 SUMMARY

A. Section Includes:
1. Shop fabricated plastic laminate faced casework and countertops.
2. Hardware and accessories.

B. Related Sections:
1. Section 06 10 00 - Rough Carpentry
2. Section 06 20 00 - Finish Carpentry
3. Section 08 70 00 - Finish Hardware
4. Section 09 22 16 - Non-Structural Metal Framing
5. Section 11 40 00 - Food Service Equipment
6. Division 22 - Plumbing
7. Division 26 - Electrical

1.2 REFERENCES

A. Reference Standards: Current edition at date of Bid.

B. American National Standards Institute (ANSI):
1. ANSI A208.2 - Medium Density Fiberboard (MDF).

C. Architectural Woodwork Standards (AWS) Edition 1

D. APA - The Engineered Wood Association (APA):
1. APA - Grades and Specifications
2. APA / PS1 - Construction and Industrial Plywood (with Typical APA Trademarks).

E. American Society for Testing and Materials (ASTM) International:
1. ASTM D570 - Standard Test Method for Water Absorption of Plastics.
2. ASTM D695 - Standard Test Method for Compressive Properties of Rigid Plastics.
3. ASTM D785 - Standard Test Method for Rockwell Hardness of Plastics and Electrical Insulating Materials.
4. ASTM D790 - Standard Test Methods for Flexural Properties of Unreinforced and Reinforced Plastics and Electrical Insulating Materials.
5. ASTM D1037 - Standard Test Methods for Evaluating Properties of Wood-Base Fiber and Particle Panel Materials.

F. Building Hardware Manufacturer's Association (BMHA):
1. ANSI/BHMA A156.1 - Butts and Hinges
2. ANSI/BHMA A156.11 - Cabinet Locks
3. ANSI/BHMA A156.18 - Materials and Finishes

G. National Electrical Manufacturer's Association: NEMA LD3 - High Pressure Decorative Laminate

H. Western Wood Products Association (WWPA): Western Lumber Grading Rules.

1.3 DEFINITIONS

A. Terminology for Surface Visibility: As defined in AWS Section 10 includes as follows.

B. Exposed Surfaces: Defined as all interior surfaces exposes to view in open casework or behind transpired doors, including:
1. Shelves, including edge banding.
2. Division and partitions.
3. Interior face of ends (sides), backs and bottoms (including pull-outs). Also included are the interior surfaces of cabinet top members 36 inches or more above the finished floor.
4. Interior face of door and applied drawer fronts.

C. Semi-Exposed Surfaces: Defined as those interior surfaces only exposed to view when doors or drawers are opened, including:
1. Shelves, including edge banding.
2. Division and partitions.
3. Interior face of ends (sides), backs and bottoms (including bank of drawers). Also included are the interior surfaces of cabinet top members 36 inches or more above the finished floor.
4. Drawer sides, subfronts, backs and bottoms.
5. The underside of cabinet bottoms between 24 inches and 42 inches above the finished floor.
6. Security and dust panels or drawer stretchers.

D. Concealed Surfaces: Defined as those exterior or interior surfaces that are covered or not normally exposed to view, including:
1. Toes space unless otherwise specified.
2. Sleepers, stretchers, and solid subtops.
3. The underside of cabinet bottoms less than 24 inches above the finished floor.
4. The flat tops of cabinets 80 inches or move above the finished floor, except if visible from an upper floor or building level.
5. The three non-visible edge of adjustable shelves.
6. The underside of countertops, knee spaces, and drawer aprons.
7. The faces of cabinet ends of adjoining units that butt together.

1.4 SUBMITTALS

A. Submit in accordance with Section 01 33 00.

B. Shop Drawings:
1. Casework and millwork locations on large scale plans and elevations.
2. Cross sections, joint details, dimensions, tolerances, and clearances.
3. Fastening methods.
4. Hardware locations.
5. Blocking requirements for anchor placement, and utility/service requirements and locations.

C. Product Data: Published brochures are accepted as substitution for Shop Drawings where specifically applicable to provisions of Contract Documents.

D. Samples:
1. Plastic Laminate: Samples indicating specified finishes and colors.
2. Hardwood Finish: Samples of hardwood lumber with specified transparent finish.
3. MDF Finish: Sample 8 inch by 10 inch panel with specified transparent finish.

4. PVC Edge Banding: Samples of each type and color.
5. Hardware: hardware pulls and latches with specified finish.
6. Shelf Supports: Samples of shelf clips for adjustable shelving within casework.
7. Grommets: Samples of each type and color.

E. Warranty:
1. Provide guarantee material and labor warranty service for one full calendar year from Substantial Completion.

1.5 QUALITY ASSURANCE

A. Meet or exceed AWI Quality Standards Section 400 and provisions of Contract Documents.
1. AWI Quality Certification Program: Certify work under this Section through AWI Quality Certification Program.
2. Website http://www.awinet.org

B. Single Source Responsibility: Fabricate and install casework under responsibility of single casework manufacturer/fabricator/installer.

1.6 QUALIFICATIONS

A. Manufacturer/Installer Qualifications:
1. Architectural Woodwork Institute (AWI) Certified active woodworking member, or accepted by Architect.
2. Documented experience in manufacturing and installing custom casework and millwork in commercial projects of similar scope and quality.

1.7 REGULATORY REQUIREMENTS

A. Conform to Regulatory Requirements specified by Section 01 42 00

B. Seismic Bracing: Design and install casework using seismic braces, anchors, and stiffeners to restrain overturning of casework, suitable for IBC Seismic Design Category D.

C. Accessibility: Conform to IBC Chapter 11 and ICC/ANSI 117.1 Accessible and Usable Buildings and Facilities.

1.8 DELIVERY, STORAGE, AND HANDLING

A. In accordance with Section 01 73 29 and manufacturer's instructions.

B. Product Handling: Do not deliver shop-fabricated items until installation areas are ready (including completion of painting, wet work, grinding, and similar operations that could damage, soil or deteriorate casework and millwork).

C. Storage: Store in areas meeting requirements for installation areas.

D. Protection: Protect finished surfaces from soiling and damage during handling and installation. Keep covered with polyethylene film or other protective covering.

1.9 ENVIRONMENTAL CONDITIONS

A. Install casework in a fully enclosed building with a relative humidity of not less than 25 percent and no more than 55 percent.

1.10 FIELD MEASUREMENTS

A. Verify field dimensions indicated on shop drawings prior to beginning work of this Section.

1.11 COORDINATION

A. Section 06 10 00 and Section 09 22 16 for backing and attachments as necessary for casework and bracket supports at open casework.

B. Division 22 – Plumbing, Division 23 - HVAC and Division 26 - Electrical: Provide for installation of concealed and semi-concealed electrical and mechanical cutouts and items into casework. Include coordination for electrical equipment into electrical equipment closets.

PART 2 PRODUCTS

2.1 MANUFACTURERS / FABRICATORS

A. The following are approved manufacturers. Substitutions allowed as approved by Owner and Architect.
   1. Higher Plane – 360-733-4322, Contact Lou Geri
      a. 1905 Division St., Bellingham, WA 98226
   2. Skagit Architectural Millwork – 360-336-9587, Contact Craig Wells
      a. 800 N. 1st Street, Mount Vernon, WA 98273
   3. Dimensional Communications, Inc. – 360-424-6164, Contact Steve Olszewski
      a. 1220 Anderson Road, Mount Vernon, WA 98273
   4. Pearson Millwork, Inc. (AWI Certified).
      a. Website http://www.pearsonmillwork.com/
   5. Pacific Cabinets, Inc. (AWI Certified).
      a. Website http://www.pacificcabinets.com
   6. Milltech, Inc.
      a. Website http://www.milltech-group.com
   7. OB Williams Co (AWI Certified).
      a. Website http://www.obwilliams.com

B. Substitution Requests: Conform to provisions of Section 01 61 00.

2.2 MATERIALS - GENERAL

A. Low-Emitting Materials: Provide manufactured wood casework, including countertops, made with adhesives and composite wood products containing no urea formaldehyde.

2.3 PLASTIC LAMINATE MATERIALS

A. High Pressure Decorative Laminate (HPDL): Meet or exceed NEMA LD3 standards for High Pressure Plastic Laminate with low glare, fine textured finish. Manufacturer's product and colors as selected by Architect.
   1. Horizontal Grade: NEMA HGS, 0.048 inch thick.
   2. Vertical Grade: NEMA VGP, 0.028 inch thick.

B. Cabinet Liner: NEMA CLS, 0.020 inch thick, melamine laminate.

C. Cabinet Backer: NEMA BKL, 0.020 inch thick.

D. Manufacturers:

1. Formica Corporation
   a. Website http://www.formica.com
2. Nevamar Decorative Laminates
   a. Website http://www.mckillican.com
3. Pionite
   a. Website http://www.panolam.com
4. Wilsonart
   a. Website www.wilsonart.com
5. Abet Laminati
   a. Website: www.abetlaminati.com
6. Substitution Requests: Conform to provisions of Section 012500.

2.4 PVC EDGE BANDING

A. Manufacturer: Dollken Woodtape, Tel (800) 426-6362, specified for type and quality. Website: http://www.doellken-woodtape.com

B. Typical PVC Edge Banding: Provide at plastic laminated faced casework edges.
   1. Exposed and Semi-Exposed Edges: 3 mm (1/8 inch) thick.
   2. Semi-Exposed Edges: 0.02 inch thick not accepted.
   3. Concealed Edges: No banding, except at front and back face of shelves.
   4. Trim edges and corners and buff smooth, same thickness as edge.

C. Adhere with hot melt waterproof adhesive under heat and pressure.

2.5 WOOD LUMBER MATERIALS

A. Moisture Content: From 5 to 10 percent.

B. Softwood Lumber Manufacturer's standard: Conform to AWS Section 3.
   1. Concealed Surfaces: Mill option.

2.6 HARDWOOD LUMBER MATERIALS

A. Moisture Content: From 6 to 8 percent.

B. Hardwood Lumber: Comply with AWI Section 100.
   1. Exposed Surfaces and Semi-Exposed Surfaces: Select white maple, plane sawn, AWI Section 100, Grade II.

C. Hardwood Edge Trim: Splined solid hardwood lumber, matching face veneer, flush with adjacent surfaces, edges eased.

2.7 MEDIUM DENSITY FIBERBOARD (MDF) PANELS

A. MDF Panels: AWS Section 4, ANSI A208.2 Product Class MD, Industrial Grade, 40 to 50 pound density. FSC Certified.
   1. Moisture Content: 4 to 7 percent.
   2. Formaldehyde Content: Manufactured with formaldehyde free binders. Labeled by manufacturer as containing less than 0.005 parts per million found occurring naturally in wood.
   3. Manufacturers/Products:
      a. Sierra Pine Ltd., Arreis, www.sierrapine.com
      b. FlakeBoard, www.flakeboard.com

c. Substitution Requests: Conform to provisions of Section 012500.

B. Exposed Panels and Panel Cores: Match exposed panels for color and uniform appearance, free from surface defects.
1. Medite, Medite II, Formaldehyde Free.

C. Fire Rated Panels and Panel Cores: Provide at fire-resistive assemblies in accordance with Code.
1. Medite FR, UL 723, Class A Fire Rated, Formaldehyde Free.

2.8 SOLID SURFACE (SS)

A. Solid Surface: Nonporous, homogeneous material maintaining the same composition throughout the part with a composition of acrylic polymer, aluminum trihydrate, and pigment.
1. Thickness: ½" Thick
2. Edge: ¼" bevel
3. Seams: Inconspicuous
4. Manufacturer: Corian
5. Color: Whisper (SS-1 At Window Sills)
6. Color: Frosty White Mirage

2.9 HINGES

A. Five Knuckle Hinges:
1. BHMA A156.1, 2-3/4 inch fixed pin, 0.095 inch thick steel, 180 to 270-degree swing, hospital type tips, designed for 32 mm hole system. Following specified for type and quality.
a. Rockford Process Control (RCB) 374.
b. Stanley HT1592.

2.10 PULLS

A. Door and Drawer Oval Wire Pulls:
1. Olympus Lock: 102-015
a. Width: 4 inch center to center.
b. Handle: Oval diameter.
c. Projection: 7/8 inch.

2.11 LOCKS

A. Locks:
1. Locks, General: Side bolt, re-keyable 5 pin tumbler.

B. Cabinet Door Lock: Olympus 100DR

C. Cabinet Drawer Lock: Olympus 200DW

D. Keying: Keyed per room and master key for all rooms.

E. Trim Spacer: Through-bolt using machine screws, Olympus Trim Spacer ETS2 reinforcing trim spacer, and through-bolt mount. Do not mount with wood screws.

F. Elbow Catch: Ives No. 2 Elbow Catch.
1. Install at inactive leaf of double doors where a lock is shown on the active leaf.

G. Flush Bolt: Ives 262, Flush Bolt
   1. Install at inactive leaf of double doors where a lock is shown on the active leaf.

H. Magnetic Catches: Magnetic, 7 pound catch. Match color of edge banding. Use star washers under screw heads to hold latch tight without distorting the plastic.
   1. Heavy Duty: EPCO 592.
   2. Standard Duty: EPCO 1000.

2.12 DRAWER SLIDES

A. Drawer Slides: Steel ball bearing movement, electro-plate zinc with clear lacquer coating.

B. Medium Duty Standard Drawer Slides:
   1. Maximum 16 Inch Drawer Width: Lever disconnect side mounting, 90 pound load rating, 1 inch over travel extension slides.
      a. Accuride 3834
      b. Knape & Vogt No. 8400
   2. Maximum 24 Inch Drawer Width: Rail disconnect side mounting, 100 pound load rating, 1 inch over travel extension slides.
      a. Accuride 7434

C. Heavy Duty Lateral Drawer Slides and File Drawer Slides:
   1. Up to 24 inch Drawer Width: Rail disconnect side mounting, 150 pound load rating, 1-1/2 inch over-travel extension slides.
      a. Accuride 4034
      b. Knape & Vogt No. 8505
   2. Up to 42 Inch Drawer Width: Rail disconnect side mounting, 200 pound load rating, 1-1/2 inch over-travel extension slides.
      a. Accuride 3640

2.13 GROMMETS

A. Wire Access Grommets:
   1. Plastic grommet with slotted cap, 2-3/8 inch diameter.
   2. Design to accommodate plugs up to 2-1/4 inches such as computer peripheral and business machine plugs.
   3. Colors: Black.
   4. Provide 50 grommets to be field located by Architect and Owner.
   5. Manufacturers
      a. Mockett, specified for type and quality
         1) Tel (800) 523-1269, Website http://www.mockett.com
      b. Substitution Requests: Conform to provisions of Section 012500.

2.14 SHELF HARDWARE

A. Shelf Clips: Polycarbonate, double 5 mm pegs, fitting 32 mm support hole spacing, designed to lock shelf in place, suitable for 3/4 inch and 1-inch thick shelves, 500 pound load capacity.

   1. Lyman Associates, Inc., Self Securing Clip
      a. Tel (253) 639-3350 Fax: (253) 639-8661.
      b. Website http://www.lymanassociates.com
   2. Allen Field / PX Industries Inc., PX-2 / HD Double Pin Shelf Lock 55536
      a. Tel (631) 756-0810, Fax ((631) 756-0436, Email sales@allenfield.com.
      b. Website http://www.allenfield.com

3. Substitution Requests: Conform to provisions of Section 012500.

B. Casework Adjustable Standards and Adjustable Support Clips at Casework: Continuous recessed standards with removable and adjustable support clips.
1. Pilaster Standards: Knape & Vogt, No. 255 ZC, 19 gauge steel by 5/8 inch wide, zinc plated.
2. Support Clips: Knape & Vogt, No. 256 ZC, zinc plated.

C. Wall Mounted Fixed Shelf Bracket: Welded construction, finished with powder coat or enamel coating matching color of PVC edge banding.
1. Minimum 1-1/2 inch wide by 1/4-inch thick cold rolled steel flatbar with minimum10 inch horizontal and vertical legs, braced with 1/4 inch diameter steel rod or flat bar welded at junctures.
2. Knap & Vogt 208 L-Bracket, 0.20 inch by 1-3/16 inch cold rolled steel flatbar with 11-1/2 inch horizontal and vertical legs, braced with 0.20 inch thick flat bar welded at junctures, 1,000 pound load capacity at 16 inch centers per pair, tested ANSI A156.9.

D. Counter Support Bracket: Manufacturer's standard shelf angle, welded construction, minimum 15 gauge by 1-1/2 inch tube steel or 1/4 inch flat bar. Support counters exceeding 36-inch span.
1. Horizontal Leg: Less 3-inch width of counter.
2. Vertical Leg: Minimum 18 inch deep.
3. Leg Brace: 1/4 inch thick by 1-1/2 inch flat bar gusset plate at 45 degree angle, 6 inch out.
4. Continuous blocking at back of support bracket.

2.15 ACCESSORIES

A. Woodwork Adhesive: Water-resistant, AWS Type I or Type II, applicable for intended use.

B. Plastic Laminate Adhesives: EPA VOC compliant, as instructed by manufacturer.

C. Exposed Fasteners and Washers:
1. Stainless steel screw and matching finish washer
2. Type W threads for screws penetrating wood and Type S for screws penetrating steel.
3. Phillips, square drive, or spanner head drive.
4. Minimum 1-1/4 inch penetration into wood framing and backing and minimum 3/8 inch penetration into metal stud framing and backing.

2.16 FABRICATION - GENERAL

A. Casework and Millwork Items: Conform to AWS Section 10, Custom Grade, Reveal Overlay construction.

B. Plastic Laminate Faced Casework: Shop fabricate conforming to AWS Section 10.

C. Casework Construction Joints:
1. Doweled: 6 minimum 10mm diameter hardwood, fluted dowels. Glued and clamped.
2. Lock Shoulder Joint: Glued and stapled or screwed.
3. Rabbeted Construction Joints: Glued and stapled or screwed.
4. Spline or Biscuit Joints: 3 per foot, glued under pressure.
5. Flush Butt Panel Joints: Accepted only at concealed backs. Glued and screwed. Not accepted at drawer bottoms.

2.17 COUNTERTOP AND BACK SPLASH FABRICATION

A. Plastic Laminate Countertop and Back Splash:
   1. Core: 3/4 inch thick MDF or agrifiber with 1/2-inch thick buildup at edges and spans exceeding 36 inch.
      a. Moisture resistant MDF core at sink countertops and where subject to moisture.
      b. Fire-resistant MDF core at counters extending through fire-resistive rated wall construction.
   2. Plastic Laminate Face Sheet: Horizontal Grade HPDL.
   3. Backing Sheet: Liner Grade at countertops and backsplashes.
   4. PVC Edge Banding: 1-1/4 inch face exposure at countertop edge. Scribe to wall at top edge of back splash.
   5. Self edge where noted in drawings.
   6. Back Splash: 4 inch high by 1/2 deep, typical.

2.18 CABINET FABRICATION

A. Wall and Base Cabinets:
   1. Panel Core: 3/4 inch thick MDF or Agrifiber panels.
   2. Exposed Vertical Surface Finish: Vertical Grade HDPL. Include areas that will be exposed when movable appliances are removed.
   3. Semi-Exposed Surface Finish: Melamine laminate.
   4. Concealed Surface Finish: Liner Grade balancing sheet, including at concealed tops, bottoms, sides, and backs of casework.
   5. Edges: Specified PVC edge banding at horizontal and vertical edges.

B. Base Cabinet Subtops: Solid, except 4 inch wide front to back rails at each side of sink openings.

C. Toe Kicks: 4 inch high by 3/4-inch thick plywood or MDF panels set into 3-inch deep toe kick at front and open ends of base cabinets.
   1. Base Cabinets Set on Continuous Bases: Build in place, level, and shim. Align with adjoining casework
   2. Base Cabinets Set Directly On Floor: Extend end and back panels to floor. Make level and aligned with adjoining cabinets.

D. Hardware:
   1. Pulls: One vertically mounted pull for each door and horizontally mounted for each drawer, except 2 pulls on drawers exceeding 30 inch width.
   2. Keyed Locks: One lock for each door or double door opening.
   3. Hinges and Magnetic Catches: Two hinges and one catch per door, except three hinges and two magnetic catches on doors 48 inch high and over.

2.19 CABINET DOOR AND DRAWER FABRICATION

A. Cabinet Doors:
   1. Plastic Laminated Casework:
      a. Core: 3/4 inch thick MDF or agrifiber panels.
      b. Faces: Vertical Grade HDPL at outside door face and melamine laminate at inside door face.
      c. Edges: PVC edge banding.
   2. Hardware:
      a. Pulls: One vertically mounted pull per door.
      b. Keyed Locks:

1) Right Hand Door: One keyed lock.
2) Left Hand Door: One catch at interior side of door to hold door closed using single keyed lock and flush bolt, at top and bottom of 1-3/4 inch doors.

c. Hinges: Two hinges per door, except three hinges on doors 36 inch high and over.
d. Magnetic Catches: One magnetic catch per door, two magnetic catches on doors 48 inch high and over.

B. Cabinet Drawers:
1. Plastic Laminate Faced Casework:
   a. Front: 3/4 inch MDF or agrifiber core.
   b. Face: Vertical Grade HDPL. Back with melamine laminate
   c. Edges: PVC edge banding.
2. Subfronts and Backs: 11/16 to 3/4 inch MDF or agrifiber, faced with melamine laminate.
3. Sides: 1/2 inch MDF or agrifiber faced with melamine laminate.
4. Bottoms: 1/2 inch thick MDF, agrifiber, or marine grade plywood faced with melamine laminate.
   a. House into sides, front, and back with continuous dado or lock shouldered construction.
   b. Completely glued around perimeter with hot-melt or PVA adhesive.
5. Edges of Drawer Box: PVC edge banding.
6. Drawers Over 30 Inch Wide: MDF or agrifiber stiffeners or metal reinforcing.
7. Drawer Joints: Assemble true and square with doweled, lock-shoulder, or rabbeted joints.
8. Hardware:
   a. Drawer Slides: Mount with positive in and out stops for permanent alignment and quiet operation.
   b. Pull: One horizontally mounted pull for each drawer.
   c. Keyed Lock: One lock for each drawer.

2.20 SHELVING FABRICATION

A. Fixed and Adjustable Casework Shelves:
1. Shelf Span:
   a. Minimum 3/4 inch thick MDF or agrifiber under 30 inch span.
   b. 1 inch thick MDF or agrifiber over 30 inch and under 42 inch span.
   c. 1-1/8 inch thick veneer core plywood over 42 inch span.
2. Faces: Melamine cabinet liner both sides.
3. Edges: PVC edge band at exposed face of fixed shelves and all four edges of adjustable shelves.
   a. Provide upturned PVC lip at edges of open athletic storage shelves.

2.21 FINISHES

A. Plastic Laminate Colors:
1. PLAM-1: Wilsonart, Fusion Maple 7909-60.
2. PLAM-2: Pionite, Appears Likatre WP115 Suede.
3. PLAM-3: Pionite, Tropical Getaway AV110.
4. PLAM-4: Wilsonart, Aloe 7962K-18.
5. PLAM-5: Pionite, Passin Through AV250 Suede.
6. PLAM-6: Wilsonart, Limber Maple 10734-60.

B. Melamine Liner Color: White as selected from manufacturer's standard colors.

C. PVC Edge Banding Color:

1. Match color of adjacent plastic laminate from full selection of manufacturer's color selection, as accepted by Architect.
2. Match melamine where not adjacent to plastic laminate.
3. As selected by Architect from manufacturer's standard colors.

D. Wood and Wood Veneer Finishing: Conform to AWI Section 1500.
1. Factory Finish Systems:
a. Finish System: Conversion Varnish, Transparent Finish, Satin finish, Performance Score minimum129.
b. UV Cured Finish Systems: Submit documentation confirming performance characteristics meeting or exceeding specified finish system.
c. For Transparent Finishes in Type II Construction: Flamort "6-3", Class A, Fire Retardant. Website: www.flamort.com
2. Field Finishes: Provide painted and transparent finish systems under work of Section 099000.

E. Hardware Finish: US 26 D (626) US Satin Chrome.

F. Shelf Clip Color: Clear.

G. Fasteners: Match finish of hardware item being fastened.

PART 3 EXECUTION

3.1 EXAMINATION

A. Verify installation conditions as satisfactory to receive work of this Section before beginning. Verify backing and framing in place for support of wall mounted and wall supported casework and millwork of this Section.

3.2 PREPARATION

A. Take measures to protect finishes and surrounding work from casework installations.

3.3 INSTALLATION

A. Install in accordance with manufacturer's instructions and provisions of Contract Documents.

B. Position and secure in true alignment, level and plumb.

C. Fasten casework backs into solid wall backing or framing using exposed screws and washers matching finish of screws.

D. Install wall-hung cabinets with sufficient fasteners and devices as needed to support weight of loaded cabinets.

E. Fasten adjoining cabinet with sufficient fasteners to meet tightly at top, middle, and bottom side panels. Place fasteners inconspicuously inside cabinets.

F. Close exposed joints, spaces, and openings to make tight hairline joints against adjacent construction to prevent papers and other materials from falling behind cabinets.
1. Install scribes and fillers of same material and finish as casework.
2. Secure with concealed screws.

G. Install minimum 3 inch deep by 4 inch high toe space at floor mounted casework.

H. Plastic Laminate Countertop:
1. Install intermediate joints between corners in longest possible length for each top
2. Maintain joint distance of minimum 24 inch clearance from sink cutout.
3. Where joints cannot be avoided at knee spaces, install additional reinforcing without reducing kneespace clearance.
4. Apply acrylic latex adhesive at each field joint, and tighten together with 1/4 inch drawbolts set into routed bottom face as needed to make flush and hairline.
5. Cut smooth, crack free holes and cutouts with minimum 1/4 inch diameter radiused inside corners.
6. Seal exposed edges with waterproof sealant
7. Install wall ledgers and counter support angles, secured to wall for support of counters spanning over 36 inch and as needed to eliminate deflection at kneespace.

I. Make cutouts using templates supplied by work of Division 22, 23 and Division 26 for mechanical and electrical fixtures and equipment installations into casework. Provide backing as required for secure attachment of fixtures and equipment.

J. Field Installed Backsplash: Fasten with concealed screws at 12 inch center into bed of acrylic resin along entire back edge of countertops.

K. Door and Drawer Hardware:
1. Mount hardware using manufacturer’s templates, aligned, plumb, and true between adjacent doors and drawers.
2. Mount with adjacent door and drawer reveals equally spaced, plumb, and square.
3. Install operating hardware to act smoothly without hanging up or binding.
4. Lubricate hardware in accordance to manufacturer's instructions.

L. Wall Shelves: Support shelves on standards and brackets at 36 inch maximum spacing.

3.4 ADJUSTING

A. Adjust and repair damaged and defective casework and hardware, or replace to eliminate functional and visual defects.

3.5 CLEANING

A. Leave installations clean and free from soiling, marks, and other defects.

3.6 PROTECTION

A. Take applicable protection measures and maintain conditions in manner acceptable to manufacturer through completion of Project.

B. Protect countertops with polyethylene, kraft paper, or other protective covering.

END OF SECTION

SECTION 12 93 13 - BICYCLE RACKS

PART 1 - GENERAL

1.1 SUBMITTALS

A. Product Data: Manufacturer's installation instructions, and details.

PART 2 - PRODUCTS

2.1 MATERIALS

A. Bicycle Racks Typical: Urban Racks sales@urbanracks.com, Urban Staple model UB-1000-STD or approved equal.
   1. Materials: Steel pipe 2.37” radius, .15” thickness.
   2. Finish: Hot-dipped galvanized.
   3. Options: Tamper-proof security bolts.

PART 3 - EXECUTION

3.1 INSTALLATION

A. Install bicycle racks in accordance with manufacturer's instructions for safe surface mounting. Locate as shown.

END OF SECTION

SECTION 20 02 00 – OPERATION AND MAINTENANCE MANUAL FOR MECHANICAL

PART 1 GENERAL

1.1 RELATED DOCUMENTS

A. Drawings and general provisions of the Contract, including General and Supplementary Conditions and Division 00 and Division 01 Specification Sections, apply to this Section.

B. Requirements of Section 20 05 00 apply to this Section.

1.2 WORK INCLUDED

A. Operation and Maintenance Manual

1.3 SUBMITTALS

A. General: Comply with Section 20 05 00 and Division 01.

B. Preliminary O&M: Submit preliminary review O&M manual for review.

C. Final O&M: Submit Final O&M manuals per Division 01.

PART 2 PRODUCTS

2.1 GENERAL

A. General Contents: A maintenance manual shall be compiled containing maintenance and operating information and maintenance schedules for all project mechanical systems. See Division 01 for quantities, organization, format, and other requirements; meet additional requirements as specified herein.

B. CD Electronic Copy: Shall contain pdf open format copies of the entire O&M manual, pdf open format copies of record drawings, and ACAD files for record drawings where ACAD shop drawings or ACAD record drawings are required (see individual specifications Sections for requirements). Files shall be bookmarked by section and by product. Drawings shall be bookmarked and labeled by sheet number and name.

2.2 SUBMITTAL DATA AND TECHNICAL O&M DATA

A. Submittal Data: Provide manufacturer’s technical product data, with manufacturer's model number, description of the equipment, equipment capacities, equipment options, electrical power voltage/phase, special features, and accessories. Label equipment and fixtures data with same designation as used on contract documents. This information may consist of the same information as the submittal data (clearly identified and marked to suit each item). This information shall be provided for all items requiring maintenance and for items that may require replacement over a 30 year period or be revised due to an Owner building improvement (includes fire sprinkler heads, plumbing fixtures, valves, plumbing specialties, equipment, air outlets/inlets, dampers, etc.).

B. Technical O&M Data: Provide for each equipment or item requiring maintenance. Label O&M data to clearly indicate which equipment on the project it applies to (use same designation as used in the Contract Documents). Data to include:

1. Manufacturer’s operating and maintenance manuals and instructions.

2. Itemized list of maintenance activities and their scheduled frequency.
3. Maintenance instructions for each maintenance activity.
4. Manufacturer's parts list.
5. Manufacturer's recommended lubricants.
6. Size, quantity and type of filters required (as applicable).
7. Size, quantity and type each belts unit requires (as applicable).
8. Size, quantity and type of fuses (as applicable)
9. System wiring diagrams and schematics.
10. Control sequence descriptions with setpoints and range of adjustments.
11. Programming logic.
12. Description of unique devices/controls/programs specific to this system.
13. Programmers manuals.

C. Sources: Provide names, addresses, and phone numbers for local manufacturer's representative, service companies, and parts sources for mechanical system components.

D. Start-Up Reports: Include copies of all equipment and system start-up reports.

E. Balancing Report: Include a full copy of the balancing report under a dividing tab for the specification section (or building system) where this work is specified. Where balancing is provided by others, obtain from the balancer a copy of the report to insert in the O&M's.

2.3 SYSTEM DESCRIPTIONS

A. General: Provide brief description of the project's mechanical systems to give an overview to Owner's maintenance and facilities staff.

B. Fire Suppression: Include type of fire suppression systems, system major characteristics, areas served, how system is sub-divided into zones, location of valves, how system is intended to operate, and significant safety or operational aspects.

C. Plumbing: Include plumbing materials used, locations of main utility connections, how piping systems are routed, valve locations, equipment descriptions, system major characteristics, any special systems, and significant safety or operational aspects.

D. HVAC Systems: Include type of HVAC system, system major characteristics, equipment used, areas served, how system is sub-divided into zones, how system is intended to operate and system setpoints, and any significant safety or operational aspects

2.4 MAINTENANCE SCHEDULES

A. General: Provide Maintenance schedules with an itemized list of maintenance activities and their scheduled frequency (i.e., weekly, monthly, semi-annually, etc.) for item requiring maintenance. This is to be a Contractor prepared listing derived from the manufacturer's operation and maintenance data and practical considerations.

B. Special Maintenance: List any critical maintenance items or areas requiring special attention.

C. Start-Up/Shut-Down: Provide normal start-up, operating, and shut-down procedures; emergency shut-down procedures; and (where applicable) seasonal shut-down procedures.

2.5 REDUCED RECORD DRAWINGS

A. Reduced As-Built Drawings: Provide reduced as-built construction drawings for fire suppression, plumbing, HVAC, Controls. Drawings' size shall be 11" x 17", except where such size precludes the reading of portions of the drawing, a larger size may be used.

PART 3 EXECUTION

3.1 NOT APPLICABLE

END OF SECTION

SECTION 20 05 00 – COMMON WORK RESULTS FOR MECHANICAL

PART 1 GENERAL

1.1 RELATED DOCUMENTS

A. Drawings and general provisions of the Contract, including General and Supplementary Conditions and Division 00 and Division 01 Specification Sections, apply to this Section.

B. Division 21 - Fire Suppression.

C. Division 22 - Plumbing Systems.

D. Division 23 - Heating, Ventilation, and Air Conditioning (HVAC) Systems.

E. Division 25 - Integrated Automation.

1.2 WORK INCLUDED

A. General Mechanical System Requirements

B. Mechanical System Motors

C. Identification and Labeling

1.3 DEFINITIONS

A. Abbreviations and Terms: Where not defined elsewhere in the Contract Documents, shall be as defined in RS Means Illustrated Construction Dictionary, Fourth Addition and in the ASHRAE Handbook of Fundamentals, latest edition.

B. "As required" means "as necessary to form a safe, neat, and complete working installation (or product), fulfilling all the requirements of the specifications and drawings and in compliance with all codes."

C. "Concealed" means "hidden from view" as determined when areas are in their final finished condition, from the point of view of a person located in the finished area. Items located in areas above suspended ceilings, in plumbing chases, and in similar areas are considered "concealed." Items located in cabinet spaces (e.g. below sinks) are not considered concealed.

D. "Coordinate" means "to accomplish the work with all others that are involved in the work by: directly discussing the work with them, arranging and participating in special meetings with them to discuss and plan the work being done by each, obtaining and completing any necessary forms and documentation required for the work to proceed, reaching agreement on how parts of the work performed by each trade will be installed relative to each other both in physical location and in time sequence, exchanging all necessary information so as to allow the work to be accomplished with a united effort in accordance with the project requirements".

E. "Finished Areas" means "areas receiving a finish coat of paint on one or more wall surface."

F. “Mechanical”, where applied to the scope of work, includes all project fire suppression systems, plumbing systems, HVAC systems, and controls for these systems and all work covered by specification Divisions 20, 21, 22, 23, and 25. Such work is shown on multiple drawings and is not limited to a particular set of sheets, or sheets prefaced with a particular letter.

G. The term "related documents" (as used at the beginning of each specification section), and the Specification Divisions and Sections listed with it, is only an indication of some of the specification sections which the work of that section may be strongly related to. Since all items of work relate to one another and require full coordination, all specification sections, as listed in the Table of Contents, shall be considered as being "related documents", and shall be considered (by this reference) in the same manner as if they had all been listed under the term "related documents" in each specification section.

H. "Work included" (as used at the beginning of each specification section), and the items listed with it, is only an indication of some of the items specified in that Section and is in no way limiting the work of that Section. See complete drawings and specifications for all required work.

I. "Verify" means "Contractor shall obtain, by methods independent of the project Architect/Engineer and Owner, the information noted and the information needed to properly perform the work".

J. “Substitution”: As applied to equipment means “equipment that is different than the ‘Basis of Design’ equipment scheduled on the drawings (or otherwise indicated in the contract documents)”.

1.4 GENERAL REQUIREMENTS

A. Scope: Furnish all labor, materials, tools, equipment, and services for all mechanical work. This section applies to all Division 20, 21, 22, 23, 25 specifications and to all project mechanical work. All mechanical equipment and devices furnished or installed under other Divisions of this specification (or by the Owner) which require connection to any mechanical system shall be connected under this division of the Specifications.

B. General: All work shall comply with Division 00, General Conditions, Supplementary Conditions, Division 01, and all other provisions of the Contract Documents.

C. Code:

1. Compliance: All work shall be done in accordance with all applicable codes and ordinances. Throughout the Project Documents, items are shown or specified in excess of code requirements; in all such cases, the work shall be done so that code requirements are exceeded as indicated. Comply with code accessibility requirements.

2. Documentation: Maintain documentation of all permits and code inspections for the mechanical work; submit documentation showing systems have satisfactorily passed all AHJ inspections and requirements.

3. Code Knowledge: Contractor and workers assigned to this project shall be familiar and knowledgeable of all applicable codes and ordinances. Code requirements are typically not repeated in the Contract Documents. By submitting a bid, the Contractor is acknowledging that the Contractor and workers to be utilized on this project have such knowledge.

4. Proof of Code Compliance: Prior to final completion, satisfactory evidence shall be furnished to show that all work has been installed in accordance with all codes and that all inspections required have been successfully passed.

Satisfactory evidence includes signed inspections by the local code authority, test lab results, qualified and witnessed field tests, and related acceptance certificates by local code authorities, and field notes by the Contractor as to when all inspections and tests occurred.

D. Complete Systems: Furnish and install all materials, appurtenances, devices, and miscellaneous items not specifically mentioned herein or noted on the drawings, but which are necessary to make a complete working installation of all mechanical systems. Not all accessories or devices are shown or specified that are necessary to form complete and functional systems.

E. Review and Coordination:

1. General: To eliminate all possible errors and interferences, thoroughly examine all the Drawings and Specifications before work is started, and consult and coordinate with each of the various trades regarding the work. Such coordination shall begin prior to any work starting, and continue throughout the project.

2. Suppliers: Suppliers of products shall review the documents to confirm that their products are suitable for the application and that all manufacturers requirements and recommendations have been satisfactorily addressed in the Contract Documents. Where not addressed the supplier shall notify the Engineer prior to bidding to resolve any issue or include in their bid an adequate amount to resolve the issue.

F. Conflicts and Discrepancies: Notify the Architect/Engineer of any discrepancies or conflicts before proceeding with any work or the purchasing of any materials for the area(s) of conflict until requesting and obtaining written instructions from the Architect/Engineer on how to proceed. Where conflicts occur, the most expensive and stringent requirement (as judged by the Architect/Engineer) shall prevail. Any work done after discovery of such discrepancies or conflicts and prior to obtaining the Architect/Engineer's instructions on how to proceed shall be done at the Contractor's expense.

G. Drawings and Specifications: Drawings and specifications are complementary and what is called for in either is binding as if called for in both. The drawings are diagrammatic and show the general arrangement of the construction and therefore do not show all offsets, fittings and accessories which are required to form a complete and operating installation. Mechanical work is shown on multiple drawings and is not limited to a particular set of sheets, or sheets prefaced with a particular letter.

H. Offsets/Fittings:

1. Piping Systems: Include in bid all necessary fittings and offset to completely connect up all systems, maintain clear access paths to equipment, and comply with all project requirements. Offsets are required to route piping around building structural elements, roof slopes, mechanical systems, electrical systems, and numerous other items. Due to the schematic nature of the plans such offsets are typically not shown. Contractor is responsible to determine the quantity of offsets and fittings required, and the labor involved. No added payment or “extras” will be granted for the Contractor’s failure to correctly estimate the number of offsets and fittings and labor required. Contractor is advised that equipment and fixture connections may require

more than 20 elbows per plumbing fixture and coil per pipe line.

2. Duct Systems: Include in bid all necessary fittings, offsets, and transitions to completely connect all systems, maintain clear access paths, and comply with all project requirements. Offsets are required to route piping around building structural elements, roof slopes, mechanical systems, electrical systems, and numerous other items. Due to the schematic nature of the plans such offsets are typically not shown. Contractor is responsible to determine the quantity of offsets and fittings required, and the labor involved. No added payments or “extras” will be granted for the Contractor’s failure to correctly estimate number of offsets, fittings, transitions and labor required. Contractor is advised that transitions are required at connections to all equipment, to all air inlets/outlets, crossing of beam lines, at crossing with piping, and similar locations.

I. Design: The level of design presented in the documents represents the extent of the design being furnished to the Contractor; any additional design needed shall be provided by the Contractor. All design by the Contractor shall be performed by individuals skilled and experienced in such work, and where required by local code (or elsewhere in the documents) shall be performed by engineers licensed in the State where the project is located. Include in bid the costs of all such project design; including engineering, drafting, coordination, and all related activities and work. Such designs services are required for many building systems; including but not limited to ductwork at equipment, piping at fixtures and equipment, hanger/support systems, temporary duct/piping systems, mechanical offsets/adjustments to suit other system, and for methods/means of accomplishing the work.

J. Special Tools: Furnish to the Owner one complete set of any and all special tools such as odd size wrenches, keys, etc. (allen wrenches are considered odd), which are necessary to gain access to, service, or adjust any piece of equipment installed under this contract. Each tool shall be marked or tagged to identify its use. Submit a written record listing the special tools provided, date, and signed by the Owner's representative receiving the tools.

K. Standards and References: Shall be latest edition unless a specific edition, year, or version is cited, or is enforced by the AHJ.

L. Warranties:

1. General: Products and workmanship shall be warranted to be free from all defects, capable of providing satisfactory system operation, and conforming to the requirements of the Contract Documents. Include in the project bid all costs associated with project warranties to ensure that the warranty extends for the required period; possible project delays and failure by others to complete their work may cause the start of the warranty period to be delayed. The Contractor shall be responsible for increasing the warranty dates by corresponding amounts to provide the required warranty periods.

2. Basic Project Warranty: As described in Division 00 and 01. See individual specification sections for specific warranty requirements. Start date and duration are as indicated in Division 00 and 01. Where not indicated otherwise in Division 00 or 01, the basic project warranty shall start at project substantial completion and be for one year.

3. Special Warranties: See individual specification sections for special warranty requirements and extended warranty periods beyond the basic project warranty.

M. Permits and Fees:

1. Obtain and pay for all permits, licenses, fees and inspections as required by the Code and as specified herein (unless noted otherwise).

2. Pay all charges made by any utility company or municipality for material, labor or services incident to the connection of service (unless noted otherwise).

N. Commissioning: All mechanical systems are to be commissioned per Section 20 08 00. The Contractor has specific responsibilities for scheduling, coordination, startup, test development, testing and documentation. At a minimum, the Contractor shall provide a documented and signed record to verify that all equipment and systems installed under this contract have been inspected and functionally tested to verify full compliance with the contract specifications. In many cases, this shall require the Contractor to create or otherwise provide procedures and checklists for approval by the Commissioning Consultant prior to the start of functional testing. Reference Division 01 and coordinate all commissioning activities with the Commissioning Consultant.

1.5 SUBSTITUTIONS

A. General: See Division 00 and 01 for information and requirements regarding substitutions. Manufacturers not scheduled on the plans or listed as “Acceptable Manufacturers” require prior approval and shall submit a substitution request form (see Division 01 for requirements and limitations). See Paragraph 2.1 this specification section regarding “Acceptable Manufacturers”.

B. Redesign:

1. The Contract Documents show design configurations based on particular manufacturers. Use of other manufacturers' products (i.e. substitutions) from what is shown (or specified) may require redesign of mechanical, plumbing, controls, fire protection, electrical, structural, and general building construction to accommodate the substitution.

2. Review the installation requirements for substitutions and provide redesign of all affected construction. The redesign shall be equal or superior in all respects to the Architect/Engineer's design (as judged by the Architect/Engineer), including such aspects as equipment access, ease of maintenance, utility connection locations, unit electrical requirements, noise considerations, unit performance, and similar concerns.

3. Redesign shall be done by the Contractor and shall meet the requirements and have the approval of the Architect/Engineer prior to beginning work. Apply for and obtain all permits and regulatory approvals.

C. Construction Modifications: Provide all required construction modifications to accommodate the substituted products; this includes all mechanical, plumbing, controls, fire protection, electrical, structural, and general building construction. Construction modification shall comply with code, specifications, and be equal to designed construction.

D. Costs: Cost of redesign, construction costs, and all additional costs incurred to accommodate substituted equipment shall be borne by the Contractor.

E. Submittals: In addition to other required submittals, submit shop drawings showing the redesign for substituted equipment; submittal shall include installation plans and sections, connecting services (i.e. ducts, piping, electrical) locations and routing, required service clearances, and related installation details. Submit data required by other disciplines to allow review of the impact of the substitution (i.e. weights, electrical).

1.6 QUALITY ASSURANCE

A. Experience: All work shall be performed by individuals experienced and knowledgeable in the work they are performing, and experienced with the same type of systems and building type as this project. By virtue of submitting a bid, the Contractor is acknowledging that workers to be utilized on this project have such experience and knowledge. Upon request of the Engineer, submit resumes showing the work history, training, and types of projects worked on, for individuals assigned to this project.

B. Code: Utilize workers experienced and knowledgeable with codes pertaining to their work; verify code compliance through-out the project.

C. ASME: All pressure vessels, pressure vessel safety devices, and pressure vessel appurtenances shall comply with the standards of, and bear the stamp of ASME.

D. Quality Assurance Checks: Prior to ordering products and making submittals, confirm the following for each:

1. General: Product is suitable for the intended purpose and complies with the Contract Documents.
2. Manufacturer: Product's manufacturer is listed as an acceptable manufacturer in the Contract Document’s or a substitution request (where allowed) has been submitted and the manufacturer has been listed as acceptable.
3. Electrical (for products requiring electrical power):
   a. Product is for use with the voltage/phase as indicated on the electrical plans (or for the electrical circuit the item will be connected to).
   b. Product's ampacity requirements (MCA) do not exceed that indicated on the electrical plans (or for the electrical circuit the item will be connected to).
4. Weight: Product's weight is no greater than that indicated.
5. Space Verification: Product will fit in the space available, and along the path available to install the item, will have adequate service clearances, and will not impede on any clearances required for other items in the space the item will be located.
6. Installation: A suitable method for installing the product has been selected which meets the project schedule and other requirements.

7. Lead Time: The product's fabrication, shipping, and delivery period meets the project schedule requirements.
8. Substituted Equipment: Where equipment is not the basis of design confirm all requirements for substituted equipment have been met and shop drawings of construction revisions have been (or are being) prepared.
9. Controls: Item is compatible with the controls it will be connected to and has been coordinated with the firm providing the project control work.
10. Listing: Item is Listed when required to be as such. And if the item is to be installed as part of a Listed system or assembly, it is compliant with the Listing of the overall system or assembly.
11. Existing Buildings/Systems: Product size, weight, connecting services (i.e. electrical, controls, power, plumbing, etc.) are configured and suitable for existing items they connect to or interface with.

E. Check-Out: The Contractor shall be responsible to verify that proper installation and proper connections have been provided for all mechanical work. Contractor shall provide installation checkout, start-up services, and perform a thorough check of all mechanical systems to verify proper installation and operation. Contractor shall operate all items multiple times under varying conditions to confirm proper operation. Contractor shall submit a checklist listing all equipment, fixtures, and similar items furnished on this project, with a date and initials indicating when the item was checked, a list of what was checked, and by whom. Such check shall, as a minimum utilize documents provided by the equipment manufacturer. Such a check-out is in addition to any commissioning activities specified (unless noted otherwise).

1.7 SUBMITTALS - GENERAL

A. Variations: Only variations that are specifically identified as described herein will be considered. Provide with the submittal (in addition to other information required): description of the proposed variation, entity who is proposing the variation, why the variation is being proposed, any cost changes associated with the variation, and any other pertinent data to allow for review. Failure to submit information on the variation as described will result in the submittal review being conducted without considering the variation.

B. Quality Assurance: By submitting an item for review, the Contractor is claiming that all “Quality Assurance Checks” (see paragraph 1.6 this specification Section) have been performed and satisfactorily passed and no further comment from the submittal reviewer is required for the “Quality Assurance Checks”.

C. Product Submittals - Information Required:

1. Manufacturer's catalog information, containing product description, model number, and illustrations. Mark clearly to identify pertinent information and exact model and configuration being submitted.
2. List of accessories and options provided with product.
3. Product dimensions and clearances required.
4. Product weight.
5. Submittal identified with product name and symbol (as shown on the

drawings or written in the specifications) and specification Section and paragraph reference.

6. Performance capacity and characteristics showing compliance with the Contract Documents.
7. Manufacturer's and local manufacturer's representative names, addresses, and phone numbers.
8. For equipment requiring piping or duct connections:
   a. Type of connections required.
   b. Size and locations of connections.
9. For electrically operated equipment:
   a. Number and locations of electrical service connections required.
   b. Voltage required.
   c. Fuse or circuit breaker protection requirements.
   d. Motor starter requirements; if motor starter is furnished with the equipment, submit product information on motor starter.
10. For equipment requiring control connections:
    a. Type of control signals required.
    b. Control communication protocol.
    c. Information on control devices furnished with equipment.
    d. Location of control connections.
11. Manufacturer's installation instructions.
12. See each specification Section for additional submittal requirements.

D. Shop Drawing Submittals: Provide for the following systems:

1. Fire Suppression Systems.
2. Mechanical room floor drain locations.
3. Mechanical room hydronic piping.
4. HVAC ductwork.
5. HVAC control systems.
6. For any parts of any system which are to be installed differently than as shown on the drawings.
7. Construction revisions to accommodate Substituted Equipment.
8. Other areas/work as noted in the Contract Documents.
9. For those systems requiring shop drawings, reference system's specification Section for additional requirements.

1.8 SCHEDULE OF VALUES

A. Breakdown: Provide schedule of values for the following categories (as a minimum); provide a materials and labor breakdown for each category.

1. Mobilization.
2. General Project Management, General Design, General Coordination, Submittals.
3. Insulation.
4. Fire Suppression:
   a. Engineering and shop drawings.
   b. Rough-in.
   c. Trim.
5. Plumbing:
   a. Underground.
   b. Aboveground.
   c. Fixtures and Trim.
6. Hydronic System:
   a. Piping Equipment (not including air handlers).
7. HVAC System:
   a. Equipment.
   b. HVAC Ductwork and Accessories
8. Controls:
   a. Engineering and shop drawings.
   b. Rough-in
   c. Trim.
   d. Programming
9. Balancing.
10. Commissioning.
11. O&M Manual, Record Data.
12. Punchlist, Closeout, Owner Training.

B. Closeout: The dollar value for "Punchlist, Closeout, and Owner Training" shall in no case be less than 3% of the total dollar value of the mechanical work.

C. Proof of Operation: In addition to payments held out for retainage and project final completion as specified above and in Division 01, the Owner reserves the right to withhold a percentage of the funds for any of the above categories until the systems (of that category) have been proven to operate as specified and have been completely tested, adjusted, commissioned, and balanced.

1.9 RECORD DOCUMENTS

A. Field Record Drawings: Maintain a set of full size contract plans at the project site upon which all changes from the as-bid plans are noted. Plans shall be maintained clean, dry and legible; with information recorded concurrent with

construction progress. These plans shall also include actual locations (with dimensions) of all underground and concealed mechanical systems. Connection points to outside utilities shall be located by field measurements and so noted on these record drawings. All addenda, change order, field orders, design clarifications, request for information, and all other clarifications and revisions to the plans shall also be made a part of these record drawings. Plans shall be available for weekly review by the Architect/Engineer. Label drawing “As-Builts” with date, name of Contractor, and name of individual overseeing the work.

B. Final Field Record Drawings Submittal: Deliver to the Architect/Engineer the original Field Record drawings and one full size copy.

C. ACAD Record Drawings: Upon completion of the project, the Contractor shall transfer all the data from the field record drawings to electronic drawing files using ACAD *.dwg format; latest release or next earlier version. Obtain from the Architect/Engineer’s office the original electronic drawing files and revise these originals. Prior to incorporating the field record drawing data into ACAD, the Contractor shall submit and obtain the Architect/Engineer’s comments of the field record drawings and incorporate any corrections into the electronic files. Label files “AS-BUILT,” along with date and name of Contractor.

D. ACAD Record Drawings Submittal: Submit 2 CD's, each having ACAD and pdf files of the field record drawings and 3 full size paper plots.

E. Photographs: Photograph with minimum 10 megapixel digital camera (or better) all concealed utilities located below ground, under floors, and in building. Photographs shall be taken prior to any insulation being installed, and with multiple views so as to allow clear understanding and locations of the systems from the photographs. Furnish prints on 8-1/2 x 11 paper, with two 5 x 7 photographs per page. Label each photograph, as to location photographs are taken and system(s) indicated, and provide two sets of 3-ring notebooks with photographs. Provide divider tabs in notebook, and organize photographs in logical groupings; provide table of contents listing all photographs. Provide a labeled CD's containing all photographs, one with each notebook.

1.10 PRODUCT HANDLING, PROTECTION AND MAINTENANCE

A. Protection:

1. Protect all products from contamination, becoming unclean, and from damage of any kind and whatever cause; when being handled, in storage, and while installed, until final project acceptance.

2. Completely cover fixtures, motors, control panels, equipment, and similar items to protect from becoming unclean and damage of any kind.

3. Protect premises and work of other trades from damage due to Mechanical work.

B. Openings: Cap all openings in pipe, ductwork and equipment to protect against entry of foreign matter until all work that could cause unclean conditions or damage is complete (including work that has dust or fumes associated with it). Caps shall be of sufficient strength and seal integrity to prevent entry of water or fumes for the most extreme conditions they may be exposed to (i.e. high velocity water spray, high winds, concrete splash, etc.)

C. Storage: Provide properly conditioned and sheltered storage facilities for products to prevent damage of any kind and to maintain new condition. Provide adequate venting arrangements to avoid condensation damage.

D. Operation and Maintenance:

1. General: Inspect products periodically to confirm conditions and maintenance needs. Keep records of inspections and (upon request) forward to the Architect/Engineer prior to project final acceptance. Operation and Maintenance shall be in accordance with manufacturer's written procedures and recognized best maintenance practices. Keep records of maintenance and (upon request) forward to the Architect/Engineer prior to project final acceptance.

2. Stored Products: Provide maintenance (i.e. equipment rotation, lubrication, flush, cleaning, etc.) and inspection on products while stored to maintain new condition.

3. Installed Products: Provide maintenance and inspection of products and operate mechanical systems until substantial completion project final acceptance or specified Owner Instruction has been provided (whichever is later). Maintenance shall include all labor and materials and all manufacturers' recommended maintenance (i.e. strainer cleaning, filter changes, bearing lubrication, belt tensioning, etc.). In addition to scheduled maintenance, review all equipment periodically to allow detection of improper operation or any special maintenance needs; review shall be consistent with best practices for the product but in no case less than a site visit every two weeks. Document all maintenance activities.

4. Extended Service/Maintenance: See Section 20 01 01 OR see Section 20 01 00.

E. Damaged Products: Damaged products shall be replaced with new. Where damage is limited to paint (or similar finish), the product may remain if the finish is restored to a new condition (as judged by the Architect/Engineer).

1.11 JOB CONDITIONS

A. Special Requirements:

1. Maintain emergency and service entrance usable to pedestrian and vehicle traffic at all times. Where trenches are cut, provide adequate bridging for traffic.

2. Coordinate startup and shutdown of all mechanical systems and utilities with related trades and the Owner's representative.

3. Coordinate all construction activities with the Owner's Representative and cooperate fully so as to minimize conflicts and to facilitate Owner usage of the premises during construction.

4. Provide temporary services to occupied areas to accommodate Owner's use during construction. All temporary work shall comply with same specifications as for new work and be of same quality.

B. Downtime Restrictions:

1. Contractor shall notify the Owner at least 72 hours in advance of any intended shut-down of any building services or systems and obtain Owner approval prior to proceeding.
2. Electrical power to the building shall not be interrupted at any one time for more than 15 minutes.

C. Schedule of Work: Arrange work to comply with schedule of construction, and so as not to violate any downtime restrictions, and to accommodate the Owner's scheduled use of the premises during construction.

1.12 ENGINEER REVIEWS AND WITNESSING

A. General: Arrange construction schedule and notifications to the Engineer to accommodate Engineer’s schedule and the possibility of review times occurring up to 14 days after notification, and for the possible failure to satisfactorily pass Engineer’s reviews requiring revisions and re-reviews.

B. Notification: Notify Engineer at least 7 days in advance of readiness for reviews; arrange mutually agreed upon times for the reviews to occur.

C. Access: Provide ladders, any special tools and safety equipment to allow Engineer's access to areas and equipment. Remove and reinstall ceiling tiles, access panels, and similar items where requested to allow for reviews.

D. Review of Systems with Equipment:

1. Prior to Engineer’s review, system’s equipment shall have received specified start-up and be substantiated by a written report.
2. Prior to Engineer’s review, systems shall have been operating properly for at least five consecutive days prior to the scheduled review date.
3. Personnel shall be present to operate the system’s equipment and controls, and to vary system settings as directed by the Engineer to allow for a review of operation over a range of settings.

E. Re-Review Fees: The project budget allows for one review by the Engineer for specified reviews and witnessing. See Division 00 and 01 for compensation to the Engineer for required re-reviews.

E. Re-Review Fees: The project budget allows for one review by the Engineer for specified reviews and witnessing. The Engineer shall be compensated for additional reviews required due to failed work or failed tests; such compensation will include travel time and mileage and be billed at the Engineer’s current billing rates. See Division 00 and 01 for additional information.

1.12 ENGINEER REVIEWS AND WITNESSING

A. General: See Division 00 and 01 for scheduling, notification, and additional requirements.

B. Access: Provide ladders, any special tools and safety equipment to allow Engineer's access to areas and equipment. Remove and reinstall ceiling tiles, access panels, and similar items where requested to allow for reviews.

C. Review of Systems with Equipment:

1. Prior to Engineer’s review, system’s equipment shall have received specified start-up and be substantiated by a written report.

2. Prior to Engineer's review, systems shall have been operating properly for at least five consecutive days prior to the scheduled review date.
3. Personnel shall be present to operate the system's equipment and controls, and to vary system settings as directed by the Engineer to allow for a review of operation over a range of settings.

D. Re-Review Fees: The project budget allows for one review by the Engineer for specified reviews. See Division 00 and 01 for compensation to the Engineer for required re-reviews.

1.13 REFERENCES

A. ASME A13.1: Scheme for the Identification of Piping Systems.

B. NFPA 791: Unlabeled Electrical Equipment Evaluation.

PART 2 PRODUCTS

2.1 ACCEPTABLE MANUFACTURERS

A. General: Any reference in the Specifications or on the Drawings to any article, device, product, material, fixture, form or type of construction by manufacturer, name, make, model number, or catalog number shall be interpreted as establishing a standard of quality and shall not be construed as limiting competition. The manufacturers listed as Acceptable Manufacturers may bid the project for the items indicated without submitting a substitution request; however that does not relieve the products from having to comply with the Contract Documents.

B. Substitutions: Products by manufacturers listed as "Acceptable Manufacturers" (other than those listed as the "Basis of Design") are considered substitutions and shall comply with the requirements for substitutions. See Paragraph titled "Substitutions" in Part 1 of this specification section.

C. Considerations: In reviewing a manufacturer for acceptance, factors considered (as compared to the specified item) include: engineering data showing item's capacity, performance, proper local representation of manufacturer, likelihood of manufacturer's future local support of product, service availability, previous installations, previous use by Owner/Engineer/Architect, product quality, availability/quality of maintenance and operation data, electrical requirements, capacity/performance, acoustics, physical dimensions, weight, items geometry and access requirements, utility needs, and similar concerns.

D. Limitations of the Term "Acceptable Manufacturer": The listing of a manufacturer as an Acceptable Manufacturer does not necessarily mean that the products of that manufacturer are equal to those specified. The listing is only an indication of those manufacturers which have represented themselves as being capable of manufacturing, or have in the past manufactured, items equal to those specified. The burden to review products to confirm equivalency with the specified products is on the Contractor. The Architect/Engineer shall be the final judge as to whether an item is equal to that specified.

E. Quality: Products provided by Acceptable Manufacturers shall be equal to or superior to the specified manufacturer's item in function, appearance, and quality,

and shall fulfill all requirements of the Contract Documents. The Architect/Engineer shall be the judge as to whether an item meets these requirements or not.

F. Manufacturer: To be considered as being made by a particular manufacturer, the product must be made directly by the manufacturer and have the manufacturer's name (or nameplate with name) affixed to the product (or on the product container where direct labeling is not possible). Example: manufacture "A" is listed as an acceptable manufacture; manufacturer "B" is not listed as an acceptable manufacturer; manufacturer "A" owns "B"; products from "B" do not qualify as being made by an acceptable manufacturer by virtue of ownership.

2.2 PRODUCTS - GENERAL

A. Standard Products: Products shall be standard products of a manufacturer regularly engaged in the manufacture of such products. The standard products shall have been in satisfactory commercial or industrial use for two years prior to bid opening. The two year use shall include applications of equipment and materials under similar circumstances and of similar size. The two year's experience must be satisfactorily completed by a product which has been sold or is offered for sale on the commercial market through advertisements, manufacturers' catalogs, or brochures. Except that equipment changes made solely to satisfy code requirements, to improve unit efficiency, or to comply with unique project requirements are not required to have two year prior operation.

B. Latest Design: Products shall be the latest design and version available from the manufacturer, including software. Discontinued products shall not be used.

C. Service Support: Qualified permanent service organizations for support of the equipment shall be located reasonably convenient to the equipment installation and able to render satisfactory service to the equipment on a regular and emergency basis during the warranty period of the contract.

D. Manufacturer's Nameplate: Equipment shall have a manufacturer's nameplate bearing the manufacturer's name, address, model number, serial number, and additional information as required by code. Nameplate shall be securely affixed in a conspicuous place. The nameplate of the distributing agent will not be acceptable. Nameplate shall be of durable construction, easily read, with lettering minimum size 12 font.

E. Compatibility: All components and materials used shall be compatible to the conditions and materials the items will be exposed to. All items exposed to the weather shall be galvanized, or be of stainless steel or similar corrosion resistant material.

F. Sizes: Sizes indicated for products manufactured to standardized sizes (e.g. pipe, pipe fittings, valves, material gauges, etc.) are minimums. During bidding confirm that the sizes are available and meet project requirements. Where indicated sizes are not available provide the next larger available size; confirm this larger size will suit the construction and meet Contract Document requirements prior to ordering. Such size revisions are subject to Engineer's review; indicate size revisions on the product submittal and why the size is being revised.

G. Non-Specified Items: Materials shown on the drawings but not specified shall be provided as shown and as required to suit the application illustrated and intended and shall be of commercial quality, consistent with the quality of similar type items provided on the project. Not all items shown on the drawings necessarily have a corresponding specification; such items shall be provided per this paragraph and so as to provide complete, finished, fully functioning mechanical systems.

H. Weights: Do not exceed the weights shown unless added structural supports are provided. Such supports shall meet the requirements of the project Structural Engineer. The Contractor shall bear all costs for all redesign and added supports to accommodate heavier equipment. The Contractor shall reimburse the Engineer for all time associated with all review and analyses regarding the use of equipment heavier than that indicated.

I. Temperature/Pressure Rating: All materials and components furnished shall be suitable for the temperature and pressures they will be exposed to. Contractor shall consider possible operating modes to ensure proper material ratings. Consideration shall include such factors as high temperatures caused by heat transfer from piping, coils, etc. when fans are shut down (e.g., motors, control devices, etc. installed within air handling units or mechanical rooms shall be rated for high temperatures due to such heat gain). Consideration shall include such factors as high temperatures caused by heat transfer from piping, water heaters, etc.

J. Standardization: All products of the same type shall be by the same manufacturer and have the same characteristics and features to allow for Owner's standardization.

K. Model Numbers: Any reference to a manufacturer’s "model number" is a reference to a manufacturer’s series number or type of product, and is not a complete "model number" in having all the necessary numbers/letters to convey all of the features, accessories, and options that are required. These series numbers are only meant to convey a type of product that may meet the project requirements. Where conflicts or discrepancies occur regarding a listed manufacturer’s series or “model” number and specified capacities or features, the more stringent and expensive shall prevail.

L. Special Products: Numerous products specified for this project are custom products, and require special and unique construction and features. Such special items may include: finishes, controls, field NRTL (Nationally Recognized Testing Laboratory) re-certification, field evaluations by accredited product testing laboratories for certification for the application, construction, configuration, capacities, accessories, spare parts, warranty, testing, flow rates, application, installation, delivery date, cleaning, etc. Include in bid all costs to provide items meeting all project requirements. Products may reference a manufacturer’s series number, but are still special and custom, with the series number identifying only a reference point for the unit manufacturer. The series number is not to be construed as limiting the features or capabilities of the item. Contractor shall review all requirements and all vender quotes to ensure all requirements are being met and to include all costs in bid. No added cost will be paid for failure to include in bid all costs necessary to provide the special, unique, and custom items required.

M. Lead Free: All solder, valve components, drinking fountain components, and other items in contact with potable water shall be lead free.

2.3 ELECTRICAL

A. General: All electrical devices, wiring, products, and work shall comply with the Division 26 specifications and code. See drawings for building occupancy type, types of construction, and areas which may require special wiring methods or other electrical work.

B. Equipment: All equipment requiring power shall be factory wired to an equipment mounted junction box (or an accessible compartment with power terminals or electrical device) arranged to allow for connection of electrical power.

C. Overcurrent protection: Circuit breakers, circuit breaker disconnects, fuses, and other current limiting devices indicated to be provided, shall be rated to suit the maximum overcurrent rating of the item served, and have other ratings, as required by code. Circuit breakers for HVAC and refrigeration unit equipment shall be UL listed by HACR type.

D. Short Circuit Current Rating (SCCR): All equipment (or components) requiring the use of electrical power shall have a SCCR value to comply with code. The minimum rating shall be 65,000 Amps RMS Symmetrical unless a lower value is indicated on the plans or allowed by code. Where the Contractor wishes to utilize equipment having a lower rating, the Contractor shall be responsible to provide calculations substantiating that a lower SCCR is acceptable (and complies with code), or make revisions to the electrical system to accommodate the proposed equipment (or components).

E. Product Certification (Listing): Products which require connection to electrical power shall be certified (i.e. listed) by a Nationally Recognized Testing Laboratory (NRTL) and be labeled (in a conspicuous place) with such certification (or certification mark). Certification shall comply with code, OSHA Standards, and Authority Having Jurisdiction (AHJ) requirements. NRTL's shall be recognized as such by OSHA and the AHJ. Certification shall be for the complete assembly (approval of individual components is not acceptable). Field evaluations to obtain certification shall be performed by accredited product testing laboratories acceptable to the AHJ and Engineer, be performed in accordance with code, NFPA 791, recognized practices, and be labeled to identify the certification. Certification is not required where the AHJ does not require it.

Where field modifications are made to a NRTL certified product, and where required by the AHJ, provide a field evaluation (with a written report) by the NRTL that certified the product to confirm that the product continues to comply with its certification. Due to custom requirements of this project modifications may be required necessitating NRTL field evaluation (see equipment specifications and system requirements).

F. Designated Critical Operations Areas (DCOA): Electrical work DCOA areas shall comply with NFPA requirements for Critical Operations Power Systems (COPS). Essential facilities in their entirety shall be considered as DCOA unless noted otherwise.

2.4 MOTORS

A. General: Where a piece of equipment specified includes an electric motor, the motor shall be factory installed and mounted. Motor starters and motor electrical disconnect switches shall be provided by the Contractor doing the work of the Section where the item was specified, unless specifically shown to be provided by Division 26 (or another Division). Wiring from the motor to motor starters and to electrical disconnects shall be by the Contractor doing the work of the Section where the item was specified, unless specifically shown to be provided by Division 26.

B. Acceptable Manufacturers: General Electric, TECO-Westinghouse, Reliance, Gould, Century, Baldor, U.S. Motors, Marathon, and acceptable manufacturers for the equipment (see individual specification sections).

C. Type: Motor type shall comply with code and applicable standard requirements and be configured to suit the application. Motors located indoors shall be open frame, drip-proof type, unless indicated otherwise. Motors located outdoors exposed to weather shall have corrosion resistant finish and shall be totally enclosed fan cooled (TEFC) or totally enclosed non-ventilated (TENV) type, unless indicated otherwise. Motors used in fans serving dishwashing hoods and kitchen hoods shall be TEFC type.

D. Listing: All motors shall be UL listed.

E. Efficiency: Motor efficiencies shall comply with code. Fractional horsepower motors shall be the electronically commuted (EC) type with speed control where noted and where non-EC motors are not available which comply with code efficiency requirements. Motor power factor shall comply with code, local utility requirements, and as indicated. Provide added power factor correction devices as necessary to comply.

F. Sizing: Motors shall not be smaller than indicated and of adequate size to start and drive the respective equipment when handling the quantities specified without exceeding the nameplate full load current at the conditions indicated and for the expected operating conditions. If it becomes evident that a motor furnished is too small to meet these requirements as a result of the Contractor using substituted equipment or having revised the system arrangement, the Contractor shall replace it with a motor of adequate size at no additional cost to the Owner. Contractor shall also arrange with the Electrical Contractor to increase the size of the wiring, motor starter and other accessories as required to serve the larger motor at no additional cost to the Owner.

G. Service Factor: Minimum 1.15.

H. Variable Frequency Drive (VFD) Applications: Motors used with Variable Frequency Drives (VFD's) shall be rated for such use per IEEE standards and have shaft grounding protection.

I. EC Motors (ECM):

1. General: Electronically commutated type with integral inverter to convert AC power (of voltage/phase indicated) to DC power, and solid state circuitry to vary output power and speed of motor. Motor shall have permanently lubricated bearings with an L10 life of 100,000 hours at expected operating conditions. Motor shall have rotor position and rotation detection as required for operation.

2. Speed Range: Motor speed shall be controllable down to 25% of full speed.
3. Manual Speed Control: Provide with manual speed adjustment dial for motor speed control. Dial shall be motor mounted unless indicated otherwise, operable by a screwdriver or by hand. Motor mounted controls shall be factory wired. Remote mount dials shall be hand operable (i.e. no tools required), shall be for mounting on a standard 2 x 4 electrical junction box, and be able to be located up to 100 feet remote from the motor. Motor control wiring for remote mount dials shall be factory wired from the motor to an equipment mounted junction box (with field supplied wiring from this J-box to the remote dial).
4. EMCS Control: Motor speed shall be adjustable via a remote 0-10V input signal (unless noted otherwise) from the building EMCS. Control wiring shall be factory wired from the motor to an equipment mounted junction box. EMCS control is not required where not indicated to be provided or where not utilized as part of the control sequence.
5. Control Power: Provide with integral transformer, factory wired, as needed to power motor controls. Locate transformer at motor or equipment.
6. Alarms: For EC motors 1 HP and larger provide with integral controls to detect the following failures and to automatically reset motor after failure remedy: phase failure, power failure, low voltage, locked rotor, motor high temperature. Provide with integral controls to detect the following failure with manual reset (by power disconnect): rotor position failure, electronics high temperature.

2.5 IDENTIFICATION AND LABELS

A. General: All piping, valves, and mechanical equipment shall be labeled. Labels in concealed accessible spaces shall be reviewed and verified by Architect/Engineer prior to being concealed.

B. Piping:

1. Type: Self-sticking colored identification markers, lettered to identify the pipe contents, and banded at each end with arrow tape indicating the direction of flow. Markers shall be similar and equal to Brady "System 1" and Seton "Opti-Code" markers. Spray painted stencil labeling is not acceptable. Some labels may be special order.
2. Identification Colors: Comply with ASME A13.1, and as follows:

Conveyed Material/System	Background	Letters
Flammable	Yellow	Black
Reclaimed Water	Purple	Black
Fire Suppression	Red	White
Hydronic Systems	Yellow	Black
Potable Water	Green	White
Science Water	Yellow	Black
Compressed Air	Blue	White
Refrigeration	Black	White
Waste/Vent	Gray	White
Non-Potable Water	Yellow	Black

3. Lettering: Lettering shall identify the material conveyed in each pipe and shall match the designation used on the plans, but without abbreviations. Systems which have supply and return piping shall have piping labeled as such (i.e. heating water return, heating water supply, etc.). Systems that have different pressures shall be labeled to indicate such (i.e. Steam-Low Pressure, Steam- Medium Pressure, Natural Gas-Low Pressure, Natural Gas-Medium Pressure, etc.).

4. Size: Size of letters and color field shall comply with ASME A13.1, repeated here for convenience:

Outside Diameter of Pipe or Covering	Length of Color Field	Size of Letters
3/4 to 1-1/4 Inches	8 Inches	1/2 Inches
1-1/2 to 2 Inches	8 Inches	3/4 Inches
2-1/2 to 6 Inches	12 Inches	1-1/4 Inches
8 to 10 Inches	24 Inches	2-1/2 Inches
Over 10 Inches	32 Inches	3-1/2 Inches

5. Applications: Install on all exposed piping adjacent to each shut-off valve, at branches to indicate changes of direction, where pipes pass through walls and floors, on 20 foot centers or at least one in each room on each pipe. Markers shall be installed on all concealed accessible piping (i.e., piping above suspended ceilings, behind access doors, in accessible chases, etc.) near the point of access. For piping above suspended ceilings, markers shall be installed the same as if the piping was exposed (i.e., same as if the suspended ceiling was not in place). Markers shall be installed so as to be easily read by a person standing on the floor. Provide additional flow arrows at each pipe connection at valves having more than 2 ports (i.e. 3-way control valves).

6. Other Requirements: See other specification Sections for additional requirements.

C. Valves:

1. Labels: Laminated plastic or phenolic material, at least 1/16-inch thick, with black surface layer and white (unless other color indicated) sub-layer for letter engraving to expose sub-layer. Labels shall not be less than 3" x 1" in size. Label shall be pre-drilled at one end for attachment to valve. Attach to valve with No. 6 polished nickel-steel jack chain of sufficient length to allow label to hang free.

2. Lettering: Engrave label with valve size, name of system served (cold water, heating water supply, chilled water supply, etc.) and purpose of valve. Lettering size 3/16-inch, except where needed to be smaller to fit label size.

3. Application: Labels shall be installed on all valves except valves at hydronic system coils and equipment where the valve purpose is readily obvious.

4. Valve Charts: Valve charts shall be provided for each mechanical room providing valve data for emergency, main building, and main area shut-off valves. Valve charts shall be neatly typed on 8-1/2" x 11" paper and framed under plastic with an aluminum (or wood) frame and posted in the appropriate

room at a visible location acceptable to the Architect/Engineer. Sample chart organization:

"PROJECT NAME"
MAIN VALVE CHART

Valve Size	Service	Location	Purpose
6 Inch	HWS Main	Mechanical Room 101 NW Corner	Main HWS Shut-off
3 Inch	HWS	Above Ceiling NE Corner, Room 151	North Wing HWS Shut-off

D. Equipment:

1. Labels: Laminated plastic (or phenolic) material, 1/16-inch thick, with black surface layer and white (unless other color indicated) sub-layer, with engraving through to expose white sub-layer. Minimum 2-inch high (unless indicated otherwise or required due to equipment size) with length to contain required lettering. Label shall be pre-drilled and be mechanically fastened to the equipment. Prior to making labels, submit a list of all proposed labels.

2. Lettering: All caps, engraved on label, with equipment designation (same designation as used on Contract Drawings; e.g. HVAC-101, EF-22, CP-1A). Air handling equipment (i.e. VAV terminal units, fans, etc.) labels shall include the room names and numbers or area of building served (use final installed room designations). Where systems serve portions of the building (i.e. wings or floors), include on label the area served. Lettering shall be in multiple rows, with equipment label on top row. Equipment lettering to be 5/8-inch high; area served lettering to be 3/8-inch high (except that smaller lettering may be used if necessary to fit label size).

3. Application: All scheduled mechanical equipment shall be labeled. The label shall be located on a side of the equipment so as to be easily read, with the marking visible to a person standing at the access level near the equipment (assuming any necessary access to a concealed unit has been made).

E. Electrical Devices:

1. Labels: Minimum 1/4-inch high (unless indicated otherwise) lettering, all caps, engraved on laminated plastic or phenolic material, at least 1/16-inch thick. Laminated plastic (or phenolic) shall have black surface layer and white (unless other color indicated) sub-layer, with engraving through to expose white sub-layer. Label shall be pre-drilled and be mechanically fastened to the item; where mechanical fastening is not possible use 3M VHB double sided specialty tape No. 4945. Prior to making labels, submit a list of all proposed labels.

2. Lettering: Label shall identify the item served (using the same designation as indicated on the Contract Drawings), the source of power (by panel and circuit breaker), and comply with code.

3. Application: Variable frequency drives, motor starters, disconnects, contactors, relays and similar items which control power to equipment and system components shall be labeled. The label shall be located so as to be easily read. See Division 25 Section 23 09 33 for labeling of low voltage control components.

F. Duct Access Doors:

1. Labels: Minimum 1-inch high (unless indicated otherwise) lettering, engraved on laminated plastic or phenolic material, at least 1/16th inch thick. Laminated plastic (or phenolic) shall have red surface layer and white (unless other color indicated) sub-layer, with engraving through to expose white sub-layer. Label shall be pre-drilled and be mechanically fastened to the duct access door. In lieu of laminate type, self-adhesive vinyl signs may be used.

2. Lettering: Label shall comply with code, and indicate the item being accessed (i.e. Fire/Smoke Damper, Fire Damper, CO2 Sensor, etc.). Labels shall include the room names and numbers or area of building served; use final installed room designations.

3. Application: All duct access doors serving fire dampers, fire/smoke dampers, smoke dampers, control dampers, items required by code, and control devices shall be labeled. Where these items are provided under Division 26, they shall be labeled by Division 26. Access door label is not required where it is readily obvious as to what is being accessed (e.g. duct coil where coil is easily seen). The label shall be located so as to be easily read, with the marking visible to a person standing at the access level near the access door (assuming any necessary access to a concealed label has been made).

G. Concealed Items:

1. General: Equipment, valves, dampers and similar items concealed above accessible ceilings shall have the ceiling marked below the item to identify the item and its location.

2. Marking System: The marking system shall consist of an engraved phenolic label, minimum 1/16-inch thick and 3/4-inch high with 1/2-inch high lettering. Label shall be black with white lettering. Apply labels to ceiling grid system using 3M double sided tape (3M VHB #4945).

3. Labeling: Shall identify equipment using the same designation indicated on the plans; valves shall be identified by size and system (e.g. EF-1, VAV-101, VALVE 4” CW). Prior to making labels, submit a list of all proposed labels.

G. Concealed Items: Equipment, valves, dampers and similar items concealed above accessible ceilings shall have the ceiling marked below the item to identify the item and its location. The marking system shall consist of a round head screw (approximately 1/4" diameter head). Install screws to ceiling grid below the concealed item. Colors to be used shall be verified with Owner and, unless directed otherwise, shall be:

Item	Color
Fire Protection Component	Red
Domestic Plumbing Component	Green
Water Reclaim System	Purple
HVAC/Hydronic System Component	Blue

G. Concealed Items: Equipment, valves, dampers and similar items concealed above accessible ceilings shall have the ceiling marked below the item to identify the item and its location. The marking system shall consist of printed labels made by a professional labeling machine, black lettering on clear self sticking tape, with minimum 1/2-inch high lettering using Arial font. Apply labels to ceiling

grid below concealed item. Labels shall identify equipment using the same designation indicated on the plans; valves shall be identified by size and system (e.g. EF-1, VAV-101, VALVE 4" CW). Prior to making labels, submit a list of all proposed labels.

H. Plan Posting: Post reduced as-builts in mezzanine areas and mechanical room. As-builts shall be 11" x 17" in size, marked with a "You Are Here" label (for mezzanine plans), and be laminated in clear plastic. Post complete HVAC, plans and system schematics in mechanical room; verify location with Owner.

PART 3 EXECUTION

3.1 GENERAL

A. Workmanship: Furnish and install products to provide complete and functioning systems with a neat and finished appearance. If, in the judgment of the Architect/Engineer, any portion of the work has not been installed in accordance with the Contract Documents and in a neat workmanlike manner, or has been left in a rough, unfinished manner, the Contractor shall be required to revise the work so that it complies with the Contract Documents, at no increase in cost to the Owner.

B. Coordination: Coordinate the work with all trades that may be affected by the work to avoid conflicts and to allow for an organized and efficient installation of all systems.

C. Examination and Preparation: Examine installation conditions and verify they are proper and ready for the work to proceed. Verify compatibility of materials in contact with other materials, and suitability for conditions they will be exposed to. Do not proceed with the work until unsatisfactory conditions have been corrected. Prepare area to accept the work and prepare products for the installation.

D. Field Conditions: Check field conditions and verify all measurements and relationships indicated on the drawings before proceeding with any work. In verifying existing conditions, the Contractor shall verify by direct physical inspection, complete tracing out of systems, by applying test pressures, by excavation and inspection, use of pipeline cameras, and other suitable absolute certain methods to confirm the actual physical conditions that exist.

E. Openings and Cutting and Patching in New Construction:

1. Openings - General: The General Contractor shall provide all required spaces and provisions in structures of new construction for the installation of work of all other contractors or subcontractors.

2. Coordination: The Contractors doing work subject to Division 20 shall furnish to the General Contractor (in a timely manner) all needed dimensions and locations of openings to allow for these openings to be provided as the construction adjacent to the opening is being done.

3. Cutting and Patching: Cutting and patching of structures in place made necessary to admit work, repair defective work, or by neglect of contractors and subcontractors to properly anticipate their requirements, shall be done by the General Contractor at the expense of the contractors or subcontractors

responsible. Work shall be done in a fashion to duplicate the results that would have been obtained had the work been properly sequenced.

4. Patching Materials: Patching shall be with materials of like kind and quality of the adjoining surface by skilled labor experienced in that particular trade.

F. Openings and Cutting and Patching in Existing Construction:

1. Openings--General: Provide all openings and cutting as needed to accommodate all work. Provide patching to restore all damaged and disturbed areas to pre-construction conditions (or better). The Contractor or subcontractor requiring the opening shall be responsible for making that opening. The opening shall be made by skilled labor experienced in providing openings in the material being penetrated.

2. Areas To Be Cut and Patched: Wherever floors, walls, ceilings, plates, firestops and framing members are cut, these openings shall be substantially reinforced and sealed so as to maintain the strength and sealing ability of the element equal to that as if it had not been cut. All reinforcement/sealing shall satisfy the Architect/Engineer and comply with the governing codes. Such cut areas shall be patched and restored to a finished condition, equal to adjacent final finished areas that have not been cut.

3. Cutting of Structural Features: Make no cuts or alterations to any structural framing members without explicit consent of the Engineer, and then only under his direction. Locate cuttings so they will not weaken structural components. Cut carefully and only the minimum amount necessary. All required cutting to install material shall be accomplished with the use of saw cutting equipment.

4. Patching Materials: Patching shall be with materials of like kind and quality of the adjoining surface by skilled labor experienced in that particular trade.

G. Cleaning: Clean all products (whether exposed to view or not) of all construction debris, and other materials; grease and oil spots shall be removed with appropriate cleaning agents and surfaces carefully wiped clean. Where cleaning cannot restore items to new conditions, the item shall be replaced with new.

H. Site Work: All trenching, backfilling, compacting, and similar groundwork for utilities shall comply with specification, code, manufacturer, best construction practices, and WSDOT Standard Specifications for Road, Bridge, and Municipal Construction. Provide minimum 6-inch deep sand bedding, minimum 6-inch thick surrounding sand backfill, and 6-inch deep compacted backfill at buried items, unless noted otherwise or required otherwise. Washed 3/8-inch minus pea gravel may be used where allowed by product manufacturer and code. Subsequent backfill shall be in 6-inch lifts, and be compacted to 95% maximum density. Backfill material (above initial 6-inch sand) shall be free of organic material, and rocks larger than 3-inches in any direction.

3.2 INSTALLATION

A. General: Work shall be in accordance with manufacturer's written installation instructions, code, applicable standards, and best construction practices.

B. Space Verification: Prior to ordering materials verify that adequate space exists to accept the products, and along the installation path. Such verification shall be

by direct field measurement of the actual space available and use of manufacturer's final submittal dimensions. Where the project involves new construction and long lead items and a time schedule not allowing for such direct field measurements, confirm in writing with all trades associated with building the space that adequate room is available. Review maintenance and service access space required and confirm requirements will be met. No submittals shall be made until such space verification work has been performed, and confirmed that adequate space is available. By virtue of making a submittal that Contractor affirms he has completed this verification.

C. Installation Locations:

1. General: Unless dimensioned locations for items are shown, select the precise location of the item in accordance with the Contract Documents, coordinated with other trades and item connection locations, and subject to the Architect/Engineer's review. No allowances will be granted for failure to obtain the Architect/Engineer's review, failure to coordinate the work, and failure to comply with Contract Document requirements.

2. Manually Operated Components: Valves, damper operators, on/off switches, keypads, controls, and other devices which are manually adjustable or operated shall be located so as to be easily accessible by a person standing on the floor adjacent to the item. Any such items which are not in the open shall be made accessible through access doors in the building construction. See individual specification sections for additional requirements.

3. Monitoring Components: Gauges, thermometers, instrumentation, and other components which display visual information (i.e. operating conditions, alarms, etc.), shall be located and oriented so as to be easily read by a person standing on the floor. Provide necessary brackets, hangers, remote read devices and accessories as needed. Equipment control panels and graphic displays furnished with equipment (or integral to equipment) shall be located to be easily accessible by a person standing on the floor adjacent to the equipment, and be located between 4-feet and 6-feet above the finished floor.

4. Installation Issues: If circumstances at a particular location make the accessible installation of an item difficult or inconvenient, the situation shall be discussed with the Architect/Engineer before installing the item in a location that will result in poor access.

5. ADA Accessibility: Locate items which are required to be ADA accessible in accordance with code (including but not limited to IBC, ICC A117.1 and local amendments) for accessibility; verify accessibility requirements with the AHJ.

D. Replacement and Maintenance: Install mechanical equipment to permit easy access for normal maintenance, and so that parts requiring periodic replacement or maintenance (e.g. coils, heat exchanger bundles, sheaves, filters, bearings, etc.) can be removed. Relocate items which interfere with access or revise item installation location, orientation, or means of access.

E. Building Access Doors: Provide access doors where indicated and where needed to provide access to valves, drains, duct access doors, and similar items requiring service or access that would otherwise be inaccessible. Consult architectural drawings and coordinate location and installation of access doors

with trades which are affected by the installation. Access doors are typically not shown on the drawings. The Contractor shall review all construction details and types and locations of items requiring access to determine quantity and sizes of access doors required.

F. Rotating Parts: Belts, pulleys, couplings, projecting setscrews, keys and other rotating parts which may pose a danger to personnel shall be fully enclosed or guarded in accordance with Code, and so as not to present a safety hazard.

G. Equipment Pads: All ground and slab mounted mechanical equipment shall be installed on a minimum 4-inch thick concrete pad, (unless indicated otherwise). Where the largest dimension for any pad exceeds 6 feet provide a 6 x 6 - 10 gauge welded wire fabric reinforcement in the pad (unless noted otherwise). Concrete shall be same as used for building footings (unless noted otherwise). Concrete shall be same as used for building footings (unless noted otherwise).

H. Dissimilar Metals: Provide separations between all dissimilar metals. Where not specified in another way, use 10 mil plastic tape wrapped at point of contact or plastic centering inserts.

I. Electrical Offsets: Provide offsets around all electrical panels (and similar electrical equipment) to maintain space clear above and below electrical panels to structure, and clearance of 3.5 feet directly in front of panel, except where indicated otherwise or required by code to be more. Such required offsets are typically not shown on the plans but are to be provided per this paragraph. Include in bid offsets for all systems near electrical panels.

J. Piping Through Framing: Piping through framing shall be installed in the approximate center of the member. Where located such that nails or screws are likely to damage the pipe, a steel plate at least 1/16-inch thick shall be installed to provide protection. At metal framing, wrap piping to prevent contact of dissimilar metals. At metal and wood framing, provide plastic pipe insulators at piping penetrations through framing nearest each equipment connection and on at least 32-inch centers.

K. Safety Protection: All ductwork, piping and related items installed by this Contractor that present a safety hazard (i.e., items installed at/near head height, items projecting into maintenance access paths, etc.) shall be covered (at hazardous area) with 3/4" thick elastomeric insulation and reflective red/white self-sticking safety tape. All sharp corners on supports and other installed items shall be ground smooth.

L. Equipment Access: Access to equipment is of utmost importance. Contractor shall apply extra attention to the location of pipe and duct routings and in coordinating all work so that equipment access and a clear maintenance pathway to equipment is maintained. Poor maintenance access will not be accepted. Contractor shall note that in essentially all areas piping and ducts need to run with slopes parallel to the roof (or floor above), in necessitating elbows/fittings/transitions at crosses of ducts/pipes and at all connections to mains and branches; and requiring added fittings to maintain a clear walking path over attic walkways. An approximate 3' wide x 7' high maintenance walkway path (or as close to as possible due to structure) is required to allow access through the attic areas (such paths are not shown at all locations on the drawings but are required per this paragraph).

M. Pressure Tests: Maintain documentation of all pressure (and leakage) tests performed on systems and submit with project closeout documents. Records shall contain (as a minimum): date of test, system name, description portion of system being tested, method of test, initial and final test pressures (or of measured leakage rates, as applicable), indication of test pass or fail, name and signature of individual performing (or documenting) the test, initials of independent witness of test.

3.3 PAINTING

A. General: Painting shall comply with Division 09 specifications regarding painting Master Painters Institute Standards. Colors, in all cases, shall be as selected by the Architect/Engineer. Color samples shall be submitted to the Architect/Engineer for approval prior to painting.

B. The following painting shall be provided under Division 20:

1. All exposed metallic surfaces (includes piping, ducts, hangers, conduits, etc.) provided by this Contractor (except equipment with factory finish or items specifically excluded) shall receive one coat of rust inhibiting primer and two (2) coats of selected finish paint.

2. All exposed insulated surfaces provided by this Contractor (except where specifically excluded) shall receive one coat of primer and two coats of selected finish paint.

3. The inside of all ductwork (including visible dampers, roof vents, insulation pins, and any visible metal) behind grilles, registers, diffusers, and louvers shall be painted flat black.

C. Items to be painted under Division 09:

1. Exposed duct work in finished areas.

2. Exterior mechanical equipment.

3. Exposed piping in finished areas.

3.4 PENETRATION PROTECTION

A. Exterior and Watertight Penetrations: Where any work pierces the building exterior (or construction intended to be watertight) the penetration shall be made watertight and weatherproof. Provide all necessary products (e.g. caulking, flashing, screens, gaskets, backing materials, siding, roofing, trim, etc.). Where not detailed or indicated how to install submit shop drawings of the proposed methods. Flashing arrangements shall be per SMACNA Architectural Sheet Metal Manual unless noted otherwise. Caulking alone is not an acceptable means of sealing penetrations.

B. Equipment: Equipment or products located outdoors shall be watertight (except for provisions designed to intentionally accept water and having drain provisions) and shall be designed and intended by the manufacturer to be used outdoors at the project location. Where any work pierces the unit casing exposed to the outdoors the penetration shall be made watertight and weatherproof; provide all necessary products (e.g. caulking, flashing, gaskets, backing materials, etc.).

C. Animal Protection: Mechanical system openings, overhangs, shrouds, coverings, gaps below units, and other elements where animals could enter or occupy shall

be protected with screens to prevent animal entry or occupation. Screening shall be installed in a neat professional manner, square to the adjacent construction, and be securely attached with removable fasteners.

3.5 START-UP

A. General: Provide inspections, start-up and operational checks of all mechanical systems and equipment. Maintain documentation of all start-up work and submit with project closeout documents. See individual specification Sections for additional requirements.

B. Personnel: Inspection and start-up services shall be done by individuals trained in the operation, and knowledgeable with, the systems being started-up. Equipment start-up shall be by the manufacturer's authorized service representative where indicated (see individual specification Sections).

C. Scheduling and Agenda: Submit a proposed detailed start-up schedule with proposed dates and times at least 30 days prior to the earliest proposed system start-up. Revise dates and times as mutually agreed upon with trades involved, and witnesses, before submitting a final start-up schedule.

D. Witnessing: Start-up may be witnessed by the Engineer and Owner's representative (at their option). Notify the Engineer and Owner 7 days prior to the proposed start-up time.

3.6 OWNER INSTRUCTION

FOR USE WITH MEDIUM TO LARGE PROJECTS:

A. General: Provide instruction to the Owner on the operation and maintenance of all installed mechanical systems. Prior to instruction provide final Operation and Maintenance (O&M) manuals. Have copy of O&M manual and project drawings on hand during instruction.

B. Personnel: Instruction involving the general arrangement and overview of systems, including locations and connections of system components, shall be by individuals that were involved in the installation of these systems. Instruction on the operation and maintenance of products shall be by individuals trained and experienced in the installation, operation and maintenance of these products. Instruction shall be by the product manufacturer's authorized service representative where indicated (see individual specification Sections).

C. Scheduling and Agenda: Submit a proposed instruction schedule (with proposed dates and times) and an instruction agenda at least 30 days prior to the earliest proposed instruction period. Coordinate Owner and Architect/Engineer review and arrange mutually agreed upon instruction schedule and the instruction agenda, and submit a final instruction schedule and agenda. Organize instruction by sub-systems corresponding to the project specifications (or similar logical grouping).

D. Classroom Instruction:

1. Scope: Provide instruction in a sit-down classroom setting for each mechanical system.

2. Overview: Provide an overview of each system. Explain the overall arrangement of each system; including equipment, fixtures, system features,

capacities, isolation valve locations, and utility main connection locations; with appropriate references to drawings.

3. Operation: Explain the operation of each system. Explain normal operation, normal system settings, range of settings, how system adjustments are made, possible failure modes, emergency operation, normal and emergency start/stop procedures, safety concerns, and related information.

4. Maintenance: Explain system maintenance requirements with references to the O&M Manual. Discuss system access methods, required maintenance, maintenance procedures, and frequency of maintenance. Discuss typical repairs. Review any recommended spare parts, special tools, and special knowledge/experience required.

5. Duration: Classroom instruction shall be for a minimum 8 hours.

6. Records: Submit documentation noting names of those receiving the instruction, scope of instruction, date and time of occurrence, and signed by the individuals receiving the instruction. **Video record all instruction and provide 2 CD copies.**

E. Field Instruction:

1. Scope: Provide on-site field instruction for each mechanical product requiring maintenance or expected to require repair in the next 10 year period. Provide individual instruction for each unique product, or where products of the same type vary appreciably from others (due to size, options, etc.). See individual specification sections for additional requirements.

2. Overview: Show and explain the overall arrangement and locations of each mechanical system. Show the locations of all system major shut-off valves, location of major equipment components, routing of system mains, and related information.

3. Operation: Demonstrate and explain normal start-up, normal shut-down, normal operation, normal settings, adjustments, signs of abnormal operation, emergency shut-down, safety concerns, and related information.

4. Maintenance: Demonstrate and explain system maintenance requirements with references to the O&M Manual. Show how maintenance is performed, including how items are accessed, maintenance procedures, tools and parts required, and related information. Review typical repairs and explain how performed.

5. Records: Submit documentation noting names of those receiving the instruction, scope of instruction, date and time of occurrence, and signed by the individuals receiving the instruction. **Video record all instruction and provide 2 CD copies.**

F. Occupant Training: Provide training to building occupants explaining systems and devices that they have access to or control of. Coordinate with Owner and other training activities. Training to comply with WSSP requirements.

FOR USE WITH SMALL PROJECTS USE THE FOLLOWING:

A. General: Provide instruction to the Owner on the operation and maintenance of all installed mechanical systems.

B. Personnel: Instruction on the operation and maintenance of products shall be by individuals trained and experienced in the installation, operation and maintenance of these products. Instruction shall be by the product manufacturer's authorized service representative where indicated (see individual specification Sections).

C. Scheduling and Agenda: Submit a proposed instruction schedule (with proposed dates and times) and an instruction agenda at least 30 days prior to the earliest proposed instruction period. Coordinate Owner and Architect/Engineer review and arrange mutually agreed upon instruction schedule and the instruction agenda, and submit a final instruction schedule and agenda. Organize instruction by sub-systems corresponding to the project specifications (or similar logical grouping).

D. Instruction: Demonstrate and explain normal start-up, normal shut-down, normal operation, normal settings, adjustments, signs of abnormal operation, emergency shut-down, safety concerns, and related information. Demonstrate and explain system maintenance requirements with references to the O&M Manual. Show how maintenance is performed, including how items are accessed, maintenance procedures, tools and parts required, and related information. Review typical repairs and explain how performed.

END OF SECTION

SECTION 20 05 19 – PIPING SPECIALTIES FOR MECHANICAL

PART 1 GENERAL

1.1 RELATED DOCUMENTS

A. Drawings and general provisions of the Contract, including General and Supplementary Conditions and Division 00 and Division 01 Specification Sections, apply to this Section.

B. Requirements of Section 20 05 00 apply to this Section.

1.2 WORK INCLUDED

A. Thermometers

B. Pressure Gauges

C. Strainers

D. Unions

E. Flexible Connectors

F. Test Ports

G. Access Doors

1.3 SUBMITTALS

A. General: Comply with Section 20 05 00.

B. Product Data: Submit product information data for all items to be used.

1.4 REFERENCES

A. ANSI Z21.24: Connectors for Gas Appliances.

B. ASME B16.18: Cast Copper Alloy Solder Joint Pressure Fittings.

C. ASME B16.39: Malleable Iron Threaded Pipe Unions: Classes 150, 250, and 300.

D. ASME B40.3 - Bimetallic Activated Thermometers.

E. ASME B40.100 - Pressure Gauges and Gauge Attachments.

F. IFGC: International Fuel Gas Code.

G. IMC: International Mechanical Code.

H. UPC: Uniform Plumbing Code.

1.5 GENERAL REQUIREMENTS

A. Domestic (Potable) Water Systems: All items in contact with potable water shall be lead free in accordance with ANSI/NSF 61. Plastic piping system components shall comply with ANSI/NSF 14.

B. System Requirements: Products shall comply with additional requirements cited for the specific systems the products are being installed in; see specific system specification sections.

PART 2 PRODUCTS

2.1 ACCEPTABLE MANUFACTURERS

A. Products shall comply with Section 20 05 00, Paragraph 2.1, Acceptable Manufacturers.

B. Thermometers: Trerice, Weiss, Winters.

C. Pressure Gauges: Trerice, Weiss, Winters.

D. Strainers: Watts, Keckley, Mueller, Sarco, Taco, Paco, Bell & Gossett, Armstrong, Wilkins.

E. Unions: Anvil, Nibco, Watts, Epco, Victaulic, Ward, Jefferson Union.

F. Dielectric Connecters: Victaulic Precision Plumbing Products, Elster Perfection.

G. Flexible Connectors: Universal, Mason, Dormont, OPW, Unisource, Twin City Hose.

H. Test Ports: Autoflow, Flowset, Peterson Equipment.

I. Access Doors: J.R. Smith, Zurn, Josam, Acudor, Elmdoor, Kees, J.C. Industries.

J. Escutcheons: Selected by Contractor.

2.2 THERMOMETERS - INDUSTRIAL

A. Type: 7-inch scale, adjustable angle, red reading mercury, industrial thermometer.

B. Construction: Aluminum or polyester case, acrylic plastic or heavy glass window, aluminum face, stem of brass or aluminum construction, with separate brass socket (i.e. thermowell). Bulb chambers tapered to match taper in thermowell to give metal to metal contact. Scale case adjustable over a minimum 180° range, with locking fastener.

C. Stem Length: Stem insertion length approximately one-half of pipe diameter. Where installed on tanks, minimum insertion length is 5". Where installed on insulated piping systems, provide a longer stem thermometer and extended neck socket (thermowell) to extend thermometer base past the insulation.

D. Display: White background with bold black numerals and Fahrenheit degree markings, red reading mercury.

E. Accuracy: Plus or minus 1% of full scale.

F. Ranges: Plus or minus 50% of systems normal operating temperature (at point of measurement), with figure intervals approximately 1/20th of range. For systems with multiple operating temperatures wider ranges may be used to allow the same thermometer type through-out the system.

2.3 PRESSURE GAUGES

A. General: 4-1/2" round dial, stem mounting, black impact resistant phenolic (or fiberglass reinforced polypropylene) flangeless case, white face with black numerals, phosphor bronze bourdon tube rated to minimum 250 psi, brass socket, acrylic window, and 1/4" npt (or 1/2" npt) bottom connection. Shut off cock not allowed (use ball valve). Rated for use with the system pressures and temperatures to be exposed to, but be rated for no less than 250° F. Accuracy

shall be 0.5% per ASME B40, 100 Grade 2A.

B. Liquid Fill: Gauges used on pumps and where vibration or pulsation are present shall be liquid filled and be provided with a snubber. Liquid fill shall be suitable for ambient temperatures from 0 to 150° F, and for system temperatures to be encountered.

C. Syphons: Gauges used on steam or steam condensate piping shall have syphons; rated for minimum 500 psi and 400° F.

D. Pressure Gauge Ranges: 0 to 1.5 times systems normal operating pressure (at point of measurement), with numeral figures on 5 psig for gauges reading to 100 psi, and 10 psig on gauges reading to higher values. Except: systems which operate at a vacuum, provide range from 30 to 0 inches mercury vacuum; where measuring differential pressure provide range 1.5 times normal measured pressure.

2.4 STRAINERS

A. Water Systems:

1. Copper Piping Systems 2-1/2” and Smaller: Bronze body, “Y” type, screwed or solder type end connections, 125 lb class (rated 125 psi steam working pressure at 350 deg F minimum) and 400 psi (WOG) rated working pressures at 210 deg F, stainless steel 20 mesh wire screen, and gasketed retainer cap. Reinforce wire mesh with perforated stainless steel sheet for sizes 2" and 2-1/2". Ratio of net free area of screen to pipe free area greater than 3.5. Provide with blowdown valve, ball type, with 3/4" NPT male end connection. Valve manufacturer shall be listed as an “Acceptable Manufacturer” in the hydronic piping system specification section.

2. Copper Piping Systems 3" and Larger: Bronze or ductile iron body, “Y” type, flanged end connections, 150 lb class (rated 150 psi steam working pressure at 400 deg F minimum), brass or stainless steel screen with 3/64" perforations for 3" and 3/32" perforations for larger sizes; with gasketed threaded retainer cap. Ratio of net free area of screen to pipe free area greater than 3. Provide with blowdown valve, ball type, with 3/4" NPT male end connection. Valve manufacturer shall be listed as an “Acceptable Manufacturer” in the hydronic piping specification section.

3. Steel Piping Systems: Ductile iron, cast iron, or carbon steel construction, “Y” type, 250 lb class (rated 250 psi steam working pressure at 450°F minimum), with stainless steel screen. Screen shall be 20 mesh for strainers up to 2" in size, and have 3/32" perforations on larger sizes. Sizes 2-1/2 inch and less shall have threaded end connections; larger sizes shall have flanged end connections. Provide with bolted and gasketed strainer cap on flanged strainers; provide threaded gasketed retainer cap on threaded strainers. Provide with blowdown valve, ball type, with 3/4" NPT male end connection. Valve manufacturer shall be listed as an “Acceptable Manufacturer” in the hydronic piping system specification section.

2.5 UNIONS

A. Dielectric Unions: Shall not be used. Provide “dielectric connector” with standard union where union is required at connection point of dissimilar materials.

B. Unions on Copper Pipe:

1. General: Pressure and temperature ratings to match (or exceed) piping system being installed in; minimum Class 125.
2. 2-Inch Pipe and Smaller: Wrought copper solder joint copper to copper union, complying with ASTM B16.18.
3. 2-1/2-Inch Pipe and Larger: Brass flange unions.

C. Unions on Steel Pipe:

1. General: Pressure and temperature ratings to match (or exceed) piping system being installed in; minimum Class 150.
2. Threaded: Malleable iron union, threaded connections, with ground joints, complying with ASME B16.39. Provide with brass-to-iron seat (except provide iron-to-iron seat where the conveyed material is detrimental to brass).
3. Welded and Flanged: Flange unions; see individual system specification sections.

D. Dielectric Connector: Schedule 40 steel pipe nipple, zinc electroplated, with internal thermoplastic lining which is NSF/FDA listed and meeting all code requirements for potable water applications. Suitable for continuous use up to 225 deg F and 300 psi. "Clearflow" dielectric waterway (or approved). For systems operating at temperatures greater than 225 deg F provide flanged connections with insulating gaskets.

2.6 FLEXIBLE CONNECTORS

A. Pump Flexible Connectors: Twin sphere type, constructed of peroxide cured EPDM with Kevlar tie cords, multilayered. Embedded solid steel rings shall be used at raised face flanged ends. Shall have an external ductile iron reinforcement ring between spheres. Rated minimum 225 psi at 230°F. Control rods shall be used as recommended by the manufacturer for the application; rods shall have 1/2-inch thick neoprene bushings, washers and accessories sized to accommodate system loads and conditions. Same size as pipe installed end, with end connections to suit connecting piping. Mason Industries “SafeFlex” SFDEJ Series, and SFDCR Series.

B. Piping Flexible Connectors:

1. General Use: Corrugated hose type with outer braided wire sheath covering. Corrugations shall be close pitch annular type. Minimum working pressure of 250 psig, minimum length of 12 inches (or 12 times the connector's nominal diameter, whichever is more), and screwed or flanged end connections. Metal for hose shall be bronze or stainless steel; braided sheath shall be stainless steel, any type of ASTM 300 series.
2. Fuel Gas Piping 1-1/4 inch and Smaller: Factory fabricated flexible gas connector, constructed of type 304 stainless steel tubing, corrugated, with brass or stainless steel threaded end fittings, and heavy PVC coating. Listed for use in fuel gas piping systems; complying with ANSI Z21.24 and IFGC. Size flexible connector to match pipe size shown on plan, with reducer after the flexible connector to match the equipment connection size (where connecting to equipment). Length as required to accommodate equipment

movement relative to piping; minimum 18-inch length for sizes 1/2-inch diameter and less; minimum 24-inch length for larger sizes. Where used on appliances that require to be moved for cleaning or servicing, provide type listed for mobile appliance application, with adequate length to allow for appliance movement, and with a restraining cable and mounting hardware to prevent strain applied to gas connector.

3. Fuel Gas Piping Larger than 1-1/4 inch: Factory fabricated flexible gas piping connector, constructed of series 304 or 321 stainless steel, with braided exterior, carbon steel (or stainless steel) threaded or flanged end connections, rated for 350 psig working pressure, For use with fuel gas piping systems and complying with IFGC. Size flexible connectors to match pipe size shown on plan, with reducer after the flexible connector to match the equipment connection size.

2.7 TEST PORTS

A. Temperature/Pressure Type: Test port for installation in tee in piping allowing insertion of probe for measurement of pressure and/or temperature. Valve shall be of brass construction, have 1/4-inch or 1/2-inch NPT male connection, with dual valves to prevent leakage and gasketed cap with attachment to test port. Rated for minimum 500 psi and 275 deg F. Provide extended length on insulated piping systems so that insulation does not cover the test port.

2.8 ACCESS DOORS

A. Hinged lockable steel access door, for mounting on face of wall, with minimum 16 gauge frame and 16 gauge door, concealed hinge, cam and cylinder lock, and anchor straps or anchor frame with mounting holes. Provide Type 304 stainless steel construction with No. 4 finish where used in restrooms, locker rooms, kitchens, and similar "wet" areas. Provide steel construction with prime coated finish in other areas. Door shall have rounded corners, and concealed pivoting rod hinge. Size shall be 12" x 12" (unless indicated otherwise) but shall be large enough to allow necessary access to item being served and sized to allow removal of the item (where access door is the only means of removal without disturbing fixed construction).

B. Fire Rating: Door shall maintain fire rating of element installed in; reference drawings for required rating.

C. Access doors shall all be keyed alike. Provide two (2) keys for each door.

2.9 ESCUTCHEONS

A. Type: Circular metal collar to seal pipe penetrations at building elements (i.e. walls, floors, cabinets, and ceilings); one piece type except that split hinge type may be used for applications on existing piping.

B. Construction: Constructed of chrome plated brass or polished stainless steel, sized to tightly fit pipe exterior surface (or pipe insulation where insulated) and to fully cover the building element penetration.

C. Projection: Shallow face type with maximum projection from wall not to exceed 1.2 times inner diameter of escutcheon.

D. Special Applications: For sprinkler heads and similar special applications see items' specification Section.

PART 3 EXECUTION

3.1 INSTALLATION

A. Thermometers: Install thermometers and thermal wells in piping at locations indicated, and so as to be easily read.

B. Pressure Gauges: Install pressure gauges at inlet and outlets of all pumps; at each side of pressure reducing valves; and as indicated. Provide with ball-type isolation valves.

C. Strainers: Install strainers as indicated. Provide valve in blow-off connection on strainers, valve shall be same size as blow-off tapping.

D. Unions: Install unions in pipe connections to control valves, coils, regulators, reducers, all equipment, and where it may be necessary to disconnect the equipment or piping for repairs or maintenance; and as indicated. Where flanged connections occur at equipment additional unions are not required unless indicated otherwise. Dielectric unions shall not be used.

E. Dielectric Connectors: Install connectors between all connections of copper and steel piping (or equipment), and other dissimilar metals. Where flanged connections occur use insulating type flanges. Dielectric unions shall no be used.

F. Flexible Connectors - Piping: Install at pipe connections to equipment with rotating elements (except not required at hydronic heating/cooling coils unless specifically noted), at building expansion joints, and where indicated. Provide flexible connector in gas piping connections to all equipment; size flexible connectors to match pipe size shown on plan, with reducer after the flexible connector to match the equipment connection size.

G. Test Ports: Install at locations shown on drawings and where needed by Balancer to allow measurements for flow adjustments.

H. Access Doors: Provide access doors where indicated on the drawings and where needed to provide access to trap primers, water hammer arresters, cleanouts, valves, coils, controls, mechanical spaces, and similar items requiring service or access that would otherwise be inaccessible. Consult architectural drawings and coordinate location and installation of access doors with trades which are affected by the installation. Access doors are typically not shown in the plans. Review ceiling and wall types and locations of items requiring access to determine quantity and sizes of access doors required.

I. Escutcheons: Provide at all pipe penetrations through building elements, except where penetration is concealed (unless specifically noted otherwise). Items located in accessible cabinet spaces (e.g. below sinks) are not considered concealed.

END OF SECTION

SECTION 20 05 29 – HANGERS AND SUPPORTS FOR MECHANICAL

PART 1 GENERAL

1.1 RELATED DOCUMENTS

A. Drawings and general provisions of the Contract, including General and Supplementary Conditions and Division 00 and Division 01 Specification Sections, apply to this Section.

B. Requirements of Section 20 05 00 apply to this Section.

1.2 WORK INCLUDED

A. Pipe Hangers and Supports

B. Duct Hangers and Supports

C. Mechanical Equipment Anchors and Supports

1.3 QUALITY ASSURANCE

A. Pipe Hanger Standards: Manufacturers Standardization Society (MSS) Standards SP-58, SP-89, SP-69, and SP-90.

B. General: All methods, materials and workmanship shall comply with Code; including IBC, IMC, UPC, NFPA Standards, and ASME standards.

1.4 SUBMITTALS

A. General: Submittals shall comply with Section 20 05 00.

B. Product Data: Submit product data for all hangers, supports, and anchors. Data to include finish, load rating, dimensions, and applicable agency listings. Indicate application for all items by system type, size, and other criteria as appropriate to project.

C. Shop Drawings:

1. General: Shop drawings shall clearly indicate dimensions, anchor and support type, anchor and support size, anchor and support spacing, finish, configuration, and systems/equipment to be applied to.
2. Attachments: Submit shop drawings for proposed attachment methods to building structure where the method of attachment has not been shown on the drawings, or where attachment methods other than those shown on the drawings are desired to be used.
3. Fabricated Supports: Submit shop drawings for all fabricated supports.
4. Finished Areas: Submit shop drawings for all supports that will be exposed in finished areas.

1.5 GENERAL REQUIREMENTS

A. Seismic: Provide adequate hangers, supports, anchors, and bracing to serve as seismic restraints. Seismic restraints shall comply with Section 20 05 48. Provide seismic restraint calculations and information per Section 20 05 48 and as required by code.

B. Design and Manufacture: All pipe hangers and supports shall be designed and manufactured in accordance with MSS-SP 58.

1.6 REFERENCES

A. ADC: Air Duct Council - Flexible Duct Performance and Installation Standard, 5th Edition.

B. ASHRAE-F: American Society of Heating, Refrigeration, and Air Conditioning Engineers, Handbook of Fundamentals.

C. ASME B31.1: Power Piping.

D. ASME B31.9: Building Services Piping.

E. ASTM A36: Standard Specification for Carbon Structural Steel.

F. ASTM A108: Standard Specification for Steel Bar, Carbon and Alloy, Cold - Finished.

G. ASTM A123: Standard Specification for Zinc (Hot-Dip Galvanized) Coatings on Iron and Steel Products.

H. ASTM A153: Standard specification for Zinc Coating (Hot-Dip) on Iron and Steel Hardware.

I. ASTM A653: Standard Specification for Steel Sheet, Zinc Coated (Galvanized) or Zinc Iron Alloy-Coated (Galvannealed) by the Hot Dip Process.

J. ASTM A907: Standard Specification for Steel, Wire, Epoxy - Coated.

K. ASTM A924: Standard Specification for General Requirements for Steel Sheet, Metallic-Coated by the Hot Dip Process.

L. IBC: International Building Code.

M. IMC: International Mechanical Code.

N. Federal Spec QQ-W-461H: Wire, Steel, Carbon (Round, Bare, and Coated).

O. Mason SRG: Mason Industries Seismic Restraint Guidelines for Suspended Piping, Ductwork, Electrical Systems and Floor Mounted Equipment, 6th Edition.

P. MSS SP-58: Pipe and Hangers and Supports - Materials, Design and Manufacture.

Q. MSS SP-69: Pipe and Hangers and Supports - Selection and Application.

R. MSS SP-89: Pipe Hangers and Supports - Fabrication and Installation Practices.

S. MSS SP-90: Guidelines on Terminology for Pipe Hangers and Supports.

T. SMACNA-DCS: HVAC Duct Construction Standards, 3rd Edition.

U. SMACNA SRM: Seismic Restraint Manual Guidelines for Mechanical Systems, 2nd Edition.

V. UPC: Uniform Plumbing Code.

PART 2 PRODUCTS

2.1 ACCEPTABLE MANUFACTURERS

A. Products shall comply with Section 20 05 00, Paragraph 2.1, Acceptable Manufacturers.

B. Hangers and Supports: Grinnell, B-Line Systems, Unistrut, Erico, PHD, Basic-PSA, Pate, Caddy, Unisource, Metraflex, American Insulation Sales, Thermal Pipe Shields.

C. Anchors: Rawplug, Phillips, Hilti, Michigan, Simpson, Fastenal, Grinnell, B-Line Systems, Unistrut, PHD, Basic-PSA, Metraflex.

2.2 GENERAL

A. Finish:

1. Indoor Applications: Electro-plated zinc in accordance with ASTM B 633, or hot-dip galvanized after fabrication in accordance with ASTM A 123; except that hanger straps may be formed from pre-galvanized steel.

2. Outdoor Applications: Hot-dip galvanized after fabrication in accordance with ASTM A 123, ASTM A 153, or ASTM A 653 (as applicable to item).

B. Identification: Steel pipe hangers and supports shall be stamped with the manufacturer's name, part number, and size.

C. Hanger Rods: Threaded hot rolled steel. Hanger rods shall be sized so that the total load imposed (including pipe or duct, insulation, hangers, and fluid) does not exceed the following:

Nominal Rod Diameter	Maximum Load
1/4 Inch	240 Pounds
5/16 Inch	440 Pounds
3/8 Inch	610 Pounds
1/2 Inch	1130 Pounds
5/8 Inch	1810 Pounds
3/4 Inch	2710 Pounds
7/8 Inch	3770 Pounds
1 Inch	4960 Pounds

D. Hanger Straps: Galvanized steel, minimum 1" x 22 gauge (except where required by Code to be heavier or noted otherwise), of lock-forming grade conforming to ASTM A924, G90 (minimum) galvanized coating conforming to ASTM A 653. Minimum yield strength of 30,000 psi. Straps shall be sized so that the total load imposed does not exceed the following:

Strap Size	Maximum Load
1" x 22 Gauge	230 Pounds
1" x 20 Gauge	290 Pounds
1" x 18 Gauge	380 Pounds
1" x 16 Gauge	630 Pounds
1-1/2" x 16 Gauge	990 Pounds

E. Beam Attachments: Constructed of malleable iron or steel, MSS standard types designed for clamping to building structural support beam. "C" clamp type shall have cup point set screws with locknuts and retaining straps. Center loaded type beam clamps shall have horizontally adjustable clamping bolt (or rod with nuts).

F. Concrete Anchors: Wedge type expansion anchors, with hex nut and washer, and stainless steel split expansion rings. Tested to ASTM E 488 criteria, UL listed, with exposed anchor head stamped with code to identify anchor length.

G. General Anchors (Screws, Nuts, Bolts, Fasteners):

1. General: Constructed of materials suitable for the conditions exposed to and materials being joined, with minimum 50 year service life. Stainless steel construction where exposed to corrosive conditions. Configuration, size and grade to suit application, accommodate expected forces, and provide anchoring to structural element (or allow for proper fastening of items). Minimum safety factor of 2.5 (or as required by code, whichever is greater). Comply with ASTM A307, SAE J429, SAE J78, or ASTM A 563; bolts and nuts shall have unified inch screw threads (course, UNC).

2. Test Reports: Provide independent test report indicating fastener strength (pullout and shear) as installed in the materials and applications of this project (when required by the Engineer or AHJ).

3. Finish: In finished areas, the portion of fastener exposed to view shall match the exposed finish of item being fastened.

H. Manufactured Strut Systems:

1. Channels: Minimum 12 gauge, 1-5/8 x 1-5/8" (unless noted otherwise), with slots/holes to suit application.

2. Accessories: Channel nuts press formed, machined and hardened with gripping slot, fabricated from steel conforming to ASTM A 108 or ASTM A 36. Fittings fabricated from steel in accordance with ASTM A 907.

3. End Caps: Vinyl cap, capable of withstanding high temperatures without degradation, manufactured specifically for use with manufactured strut. Unistrut Series P2859 or P2860 (or approved).

I. Steel: Structural steel per ASTM A 36.

J. Wood: Only allowed to be used where building structural elements are of wood construction same type, grade used for building structural members. Where located outdoors shall be the pressure treated type; with all cut portions of wood painted with wood preservative.

K. Field Galvanizing Compound: Brush or spray applied galvanizing treatment; consisting of a premixed ready to apply liquid organic zinc compound, with 95% metallic zinc content by weight in dry film. ZRC worldwide “ZRC Cold Galvanizing Compound”.

L. Rooftop Pipe Supports: Designed for rooftop support of piping to distribute load evenly over roof surface; factory fabricated. Shall be constructed of thermoplastic, polycarbonate, or polyethylene material, with attached strut support for anchoring of pipe, pipe attachment hardware, and sized to suit piping used with and so that pressure on roof does not exceed 150 pounds per square foot. Provide style with height to match pie height requirements above the roof. Strut and hardware shall be hot-dipped galvanized or have electro-galvanized finish. Plastic materials shall have UV stabilizers to resist UV deterioration. For piping systems subject expansion and contraction, provide roller type support allowing pipe movement, having a foam bottom to minimize roof abrasion. Caddy “Pyramid ST”, Pyramid 50”, “Pyramid 150”, Pyramid RL”.

M. Rooftop Equipment Sleepers: Factory fabricated sleepers, constructed of minimum 18 gauge galvanized steel, all joints fully welded, with integral base

plate pressure treated top wooden nailer, and integral top flashing having side turndown over wood nailer. Size to suit equipment supported, with minimum height above roof as indicated, and configuration to suit roof and roof insulation used with. Pate Co. “es-Equipment Supports”, Thybar “TEMS”, (or approved equal).

2.3 PIPE HANGERS AND SUPPORTS

A. Copper Pipe: All hangers used directly on copper pipe shall be copper plated or have a factory applied 1/16-inch thick (minimum) plastic coating on all contact surfaces.

B. Cushion Clamps: Pipe clamps with a vibration dampening insert between the pipe and clamp, with a nylon inserted lock-nut on clamp. Insert shall be constructed of a thermoplastic elastomer, designed to tightly fit and match pipe size and clamp used with; suitable for system temperatures.

C. Type: Shall be MSS type selected in accordance with MSS-69; except that MSS type 24, 26, and 34 shall not be used.

D. Trapeze Hangers: Shall be constructed of carbon steel angles, manufactured strut channels, or other structural shapes with flat surface (or installed saddle) for pipe support. Provide steel washer where hanger rod nuts bear on trapeze hanger. Pipe anchors shall be two piece clamp type designed for use with trapeze style (i.e. inserted into strut channel opening) or one piece type designed for welded or bolted attachment to trapeze; shaped to match pipe size (or pipe size plus insulation thickness on insulated systems). Pipe guides shall comply with paragraph titled “Alignment Guides”; or be steel angles with vertical leg height equal to pipe diameter (or pipe diameter plus insulation thickness on insulated systems); or be two piece clamp type pipe anchors sized and installed to serve as a guide.

E. Insulated Pipe Supports:

1. Insulation material at pipe support shall consist of expanded perlite, calcium silicate or high density phenolic. Where located outdoors or used on chilled water piping, insulation material, shall be water resistant. Insert shall have a flame resistant jacket of nylon reinforced kraft paper bonded to aluminum foil cover on insulation, with galvanized steel shield. Insulation material shall have no more than 5% deformation at 100 psi and a thermal conductivity no more than 0.32 Btu/hr-sf-deg F-inch (rated at 75 deg F). Insulation shall be suitable for temperatures and conditions it will be exposed to without degradation over a 30 year life.

2. All insulation and materials shall have a fire hazard rating not to exceed 25 for flame spread and 50 for smoke development, as tested by ASTM E84.

3. Insert shall be same thickness as adjoining pipe insulation, sized to match pipe diameter used on.

4. Minimum insulation and shield lengths, and minimum shield gauge:

Nominal Pipe Diameter In Inches	Insulation Length In Inches	Shield Length In Inches	Minimum** Shield Gauge
1/2 to 1	*	4	20

1-1/4 to 2	6	4	20
2-1/2 to 6	6	4	18
Larger Sizes	9	6	16

* Insert not required; shield at insulation is acceptable.
** Provide with 360° shield where pipe is clamped (or has a 360° anchor).

F. Expansion Joints:

1. General: Type to suit application (i.e. where located in middle of pipe run provide type to accept expansion/contraction in both directions; where installed at end of pipe run provide type to accept pipe expansion/contraction in one direction). Size to match piping installed in. Provide with axial movement as noted, or (where not noted) as Contractor calculated plus 25 percent excess travel, and in accordance with expansion joint manufacturer's sizing recommendations.

2. Systems Below 200 deg F:

   a. Bellows Type - Steel Piping: Corrugated bellows type, suitable for 150 psi working pressure at 380 degree F temperature. Bellows shall be of type 304 or 316 stainless steel construction. Able to accept expansion in either direction longitudinally. Metraflex Series MNLC or MN (or approved).

   b. Bellows Type - Copper Piping: Externally pressurized, packless, bellows type, suitable for 150 psi working pressure at 500 degree F temperature, copper construction. Able to accept expansion in either direction longitudinally. Hyspan Series 8500 (or approved).

   c. Mechanically Coupled Slip Type: Where mechanically coupled joint systems are allowed on steel piping systems; slip type expansion joint providing up to 3-inch axial end movement, with mechanically coupled pipe ends, rated for 150 psi working pressure and 230 degrees F. Victaulic Style 150 (or approved).

   d. Mechanically Coupled Systems: Where mechanically coupled joint systems are allowed, and system expansion/contraction can be accommodated by pipe joints having appropriate end gaps and appropriate quantity of mechanically coupled joints. See Section 23 21 15.

G. Alignment Guides: Steel "spider" type alignment guides, with anchoring legs. Provide with calcium silicate insulation where used on cold pipe lines. Metraflex “Style IV”, “PG-PRE” (or approved).

H. Pipe Anchors - Expansion: For use on pipe runs having expansion/contraction devices.

1. Contractor Fabricated: Anchors shall consist of riser clamp and welded pipe or steel angles anchored to structure, or similar arrangement (unless indicated otherwise). Provide with calcium silicate insulation insert rated for 900 psi compressive strength, and vapor barrier where used on cold pipe lines.

2. Factory Fabricated: Carbon steel anchors to force pipe expansion into system expansion/contraction devices, with paint finish. Provide with calcium

silicate insulation insert rated for 900 psi compressive strength, and vapor barrier, where used on cold pipe lines. Metraflex “PA”, “PAPI” (or approved).

2.4 DUCT HANGERS AND SUPPORTS

A. Hangers: As shown in SMACNA-DCS except that wire shall not be used and all materials used shall comply with these specifications.

B. Vertical Duct Supports at Floor: 1-1/2" x 1-1/2" x 1/8" (minimum) galvanized steel angle and to support ducts, maximum 12 foot on center, and as shown in SMACNA-DCS. For ducts over 30 inches wide provide riser reinforcing with hanger rods between the riser support and riser reinforcing.

C. Vertical Duct Supports at Wall: 1-1/2" x 1/8" (minimum) strap or 1-1/2" x 1-1/2" x 1/8" (minimum) angle bracket and as shown in SMACNA-DCS.

D. Hanger Attachments to Structure: As shown in SMACNA-DCS to suit building construction and as allowed on structural drawings. Provide washers at all fasteners through hanger straps (regardless of SMACNA-DCS allowances). Where C-clamps are provided, retainer clips shall be used. Friction beam clamps shall not be used.

E. Hanger Attachments to Ducts: As shown in SMACNA-DCS except that wire shall not be used as any form of support or attachment for ducts.

F. Flexible Duct Strap: Woven polypropylene hanging strap, minimum tensile strength of 400 lbs, minimum 1.75-inches wide, designed and intended for flexible duct support.

G. HVAC Support Wire: Steel, minimum 12 gauge, soft-annealed wire, complying with Federal Specification QQ-W-461H, and IBC for support of ceilings and accessories installed in ceilings.

PART 3 EXECUTION

3.1 INSTALLATION - GENERAL

A. General: Provide all necessary bolts, nuts, washers, fasteners, turnbuckles, hanger rods, rod connectors, stanchions, wall/roof/floor backing and attachments, bridging between structural members, and any other miscellaneous accessories required for the support and anchoring of all pipes, ducts, and mechanical equipment. All supports, whether from floor, walls, or hung from structure, are Contractor's responsibility. Anchors and supports shall be adequate to accommodate forces equipment will be exposed to. Any field cut pieces of galvanized materials shall be hot-dip galvanized after cutting; or be solvent and wire brushed clean and receive field applied galvanizing treatment. This field applied galvanizing (only allowed with prior permission for minor localized cuts) shall use multiple coats to provide as near equal protection as possible to factory (or hot-dip) applied coatings.

B. Backing: Install steel or wood backing in walls (anchored to studs) and in ceiling (anchored to joists or trusses), as required to provide support for items.

C. Installation: Install all inserts, anchors, and supports in accordance with manufacturer's instructions, code requirements, and best professional practices. The most restrictive criteria governs.

D. Welded Assembly Finish: All welded steel support assemblies shall have a power wire brush and primer paint finish where installed indoors and be have factory applied hot-dip galvanized finish where installed outdoors (or subject to moisture); unless another finish is specified.

E. Attachments: Attach to anchoring element (i.e. building structure, concrete pads, etc.) as shown on drawings (reference structural drawings). Where not detailed on the drawings, the Contractor shall design and submit shop drawings of proposed attachment methods to the Engineer for review.

F. Application:

1. Where not detailed on the drawings (or otherwise indicated), the selection and design of supports is the Contractor's responsibility, in compliance with code and Contract Document requirements; subject to submittal review and acceptance by the Engineer.

2. Exposed supports in finished areas shall be arranged to minimize their visibility; be free of dents, scratches and labels, and be configured in a manner to match the decorum and finish of the room they are installed in. Exposed supports in finished areas shall be cleaned to allow for field painting (unless a chrome, stainless steel, or similar finish has been indicated).

3. HVAC Support wire and flexible duct strap shall only be used for support of ceiling air inlets and outlets, or at flexible duct supports.

G. Manufactured Strut ("Unistrut"): Provide end caps on all strut ends at the following locations:

1. Where exposed to view in finished areas.

2. Where near maintenance access paths.

3. Where personnel injury could occur if the ends were not covered.

H. Seismic: Provide bracing and added supports to restrain movement in a seismic event. Items serving as seismic restraints shall comply with Section 20 05 48.

3.2 INSTALLATION OF PIPE HANGERS AND SUPPORTS

A. General: Aboveground pipe shall be anchored to the structure to prevent sagging, to keep pipe in alignment, and to resist the forces the pipe will be exposed to; piping shall be supported independent of equipment so that no loads bear on the equipment.

B. Adjustment: All pipe supports shall be provided with a means of adjustment for the aligning and leveling of the pipe after installation.

C. Applications: Selection, sizing, and installation of pipe supports and accessories shall be in accordance with the manufacturers recommendations, standards MSS SP-89 and MSS SP-69, UPC, and IMC. Refrigerant piping and similar piping subject to vibration (i.e. high pressure tubing) shall be installed with cushion clamps.

D. Support Spacing: Provide piping support spacing according to the most restrictive of the following: UPC, IMC, ASME B31.1, B31.9, local codes, manufacturers recommendations or Contract Documents specific requirements. Provide supports at each change in direction of piping and at each side of

concentrated loads (such as in-line pumps, valves greater than size 5", and similar items

E. Trapeze Hangers: Four or more pipes running parallel may be supported on trapeze hangers provided the slopes of such pipes allow use of common trapeze. Suspend trapeze hanger from the building structure using hanger rods; attach to the building structure using concrete inserts, beam clamps, or other approved methods. Where trapeze width exceeds 30 inches, and where building attachment restrictions require more anchor points, provide three (or more) hanger rod supports. Provide pipe anchors to secure piping to trapeze on minimum 20 foot spacing; size and install pipe anchor to allow longitudinal movement of pipe (unless noted otherwise) with minimal vertical and transverse movement; where pipe is subject to expansion/contraction provide anchoring and alignment guides per paragraph titled “Thermal Expansion/Contraction”.

F. Vertical Piping Supports: Support piping at each floor line with pipe clamps and at intermediate points as required so that hanger spacing does not exceed allowable spacing and as required to prevent excessive pipe movement and so as to comply with the maximum spacings cited above. Support all pipe stacks at their bases with a concrete pier or suitable support. For vertical pipe drops which occur away from a wall or similar anchoring surface, provide angled bracing from nearest structure on two sides of drop to provide rigid anchoring of pipe drop.

G. Pre-Insulated Pipe Supports: Protect all insulated pipe at point of support with pre-insulated pipe supports. Such supports shall be in place at time of installing pipe.

3.3 INSTALLATION OF DUCT HANGERS AND SUPPORTS

A. General: Provide anchors and supports for all ductwork. Supports and hangers shall comply with SMACNA-DCS, except that hanger spacing and hanger maximum loads shall be governed by whichever is more restrictive between these specifications or SMACNA-DCS.

B. Hanger Spacing -- Rectangular Duct:

Duct Area	Maximum Spacing
Up to 4 Square Feet	8 Feet
4.1 to 10 Square Feet	6 Feet
10 Square Feet and Up	4 Feet

C. Hanger Spacing -- Round Duct:

Duct Area	Maximum Spacing
Up to 24 Inch Diameter	8 Feet
25 Inch to 48 Inch Diameter	6 Feet
49 Inch Diameter and Up	4 Feet

D. Hanger Spacing - Flexible Duct: 4 feet, and at changes of direction as needed to maintain duct elevation and smooth airflow.

E. Vertical Ducts: Support at each floor level, but in no case less than on 12 foot intervals.

F. Flexible Duct: Support with methods shown in ADC. Metal strap in contact with the flexible duct shall have minimum 1.5-inch width.

G. Fittings: Provide supports at each change in direction of duct for ducts with 4 square foot area or more, or for ducts larger than 24 inch diameter. Locate hangers at inside and outside corners of elbows--or at each end of fitting on each side.

H. Concentrated Loads: Provide additional supports at each side concentrated loads such as modulating dampers (24" x 24" and larger), duct heaters (18" x 18" and larger), sound attenuators (all sizes), and similar items.

I. Exterior Duct: Provide supports for exterior ductwork as shown in SMACNA-DCS; spacing as specified herein.

J. End of Duct: At end of duct run, hangar shall be located no more than 1/2 the allowed hangar spacing from the end of the run.

3.4 CEILING SERVICES

A. Less than 20 Pounds: Ceiling mounted services, air inlets/outlets, and accessories weighing less than 20 pounds shall be positively attached to the ceiling suspension main runners (or ceiling support members) or to cross runners with the same carrying capacity as the main runners (or support members).

B. 20 to 56 Pounds: Ceiling mounted services, air inlets/outlets, and accessories weighing 20 pounds but not more than 56 pounds, in addition to the above, shall have two No. 12 gauge wire hangers (or minimum 1” x 22 gauge hangar straps) connected from the terminal or service to the ceiling system hangers or to the structure above. These added hangers may be slack.

C. Greater Than 56 Pounds: Ceiling mounted services, air inlets/outlets, and accessories weighing more than 56 pounds shall be supported directly from the building structure by approved hangers.

3.5 MECHANICAL EQUIPMENT ANCHORS AND SUPPORTS

A. General: Provide anchoring and supports for all mechanical equipment. All equipment shall be anchored to (or supported from) the building structure. In lieu of anchoring to the building, anchor outdoor equipment to the concrete pad serving the equipment.

B. Suspended Equipment: Support as indicated on the plans. Where not indicated use the methods shown (or consistent with) Mason SRG and SMACNA-DCS; submit shop drawings of the proposed methods to the Engineer for review.

C. Roof Mounted Equipment: Install on roof curbs or roof sleepers as indicated. Anchor equipment to the curb (or sleeper), with the curb (or sleeper) in turn anchored to the building structure.

D. Vibration Isolation: Equipment shall be supported and anchored in such a way so that no equipment vibration is transmitted to the building structure.

E. Seismic: Coordinate with requirements of Section 20 05 48; provide anchors and bracing to resist seismic forces.

END OF SECTION

SECTION 20 05 30 – SLEEVES AND SEALS FOR MECHANICAL

PART 1 GENERAL

1.1 RELATED DOCUMENTS

A. Drawings and general provisions of the Contract, including General and Supplementary Conditions and Division 00 and Division 01 Specification Sections, apply to this Section.

B. Requirements of Section 20 05 00 apply to this Section.

1.2 WORK INCLUDED

A. Pipe Sleeves

B. Duct Sleeves

C. Duct Closure Collars

D. Firestop Seals

E. Non-Firestop Seals

1.3 DEFINITIONS

A. Firestop System: Specific firestop materials or combination of materials installed in a specific way in openings in a specific rated assembly to restore (or maintain) the fire rating and smoke passage resistance properties of the assembly.

B. Firestop Seal: Same as “Firestop System”.

C. Rated Assembly: Wall, floor, roof, ceiling, roof/ceiling or other construction which is required (by code or the Contract Documents) to have a fire-resistance rating, be a smoke barrier, or to limit the passage of smoke.

1.4 SUBMITTALS

A. General: Shall comply with Section 20 05 00.

B. Product Data: Provide product data on all material to be use. Provide MSDS for all sealants, caulks and similar materials.

C. Shop Drawings – General: Shop drawings of proposed sealing/flashing assembly for roof and exterior wall penetrations.

D. Shop Drawings – Firestop: Provide firestop system shop drawings showing:

1. Listing agency’s detailed drawing showing opening, penetrating items, and firestop materials. Drawing shall be identified with listing agency’s name and number or designation, fire rating achieved, and date of listing for each firestop system.
2. Identify where each firestop system is to be used on the project.
3. Manufacturer’s installation instructions.
4. For proposed systems that do not conform strictly to the listing, submit listing agency’s drawing marked to show modifications and stamped approval by the firestop system manufacturer’s fire protection engineer.
5. Other data as required by the AHJ.

1.5 REFERENCES

A. ASTM A 36: Standard Specification for Carbon Structural Steel.

B. ASTM C534: Standard Specification for Preformed Flexible Elastomeric Cellular Thermal Insulation in Sheet and Tubular Form.

C. ASTM E 84: Standard Test Method for Surface Burning Characteristics of Building Materials.

D. ASTM E 814: Standard Test Method for Fire Tests of Through-Penetration Fire Stops.

E. UL 1479: Standard for Fire Tests of Through-Penetration Firestops.

F. UL 723: Surface Burning Characteristics of Building Materials.

G. SMACNA-DCS: SMACNA HVAC Duct Construction Standards, 3rd Edition.

H. SMACNA-ARCH: SMACNA Architectural Sheet Metal Manual, 7th Edition.

I. USGBC LEED: US Green Building Council LEED Reference Guide for Green Building Construction.

1.6 GENERAL REQUIREMENTS

A. Corrosion Protection: All sleeves exposed to water, moisture, chemicals, or subject to corrosion shall be constructed of corrosion resistant materials suitable for the exposure. Steel sleeves shall be hot dip galvanized after assembly. Provide additional coatings as noted or as required to resist corrosion.

PART 2 PRODUCTS

2.1 ACCEPTABLE MANUFACTURERS

A. Products shall comply with Section 20 05 00, Paragraph 2.1, Acceptable Manufacturers.

B. Firestop Seal Materials: 3M, Dow Corning.

C. Non-Firestop Seal Materials: 3M, GE, Dow Corning, Tremco, Pecora, Sonneborn, Pipeline Seal & Insulator.

2.2 PIPE SLEEVES

A. Diameter:

1. Belowground: Inside diameter of belowground pipe sleeves shall be at least 2-inch larger than the outside diameter of the pipe or pipe covering (for covered piping systems), so as to allow free movement of piping.

2. Aboveground: Inside diameter of aboveground pipe sleeves shall be at least 1-inch larger than the outside diameter of the pipe or pipe covering (for covered piping systems), so as to allow free movement of piping.

3. Large Movement: Provide larger sleeves where a larger space around pipe exterior is required by code, where specifically noted, where expansive soils or other unusual conditions are present and where required to accommodate large piping movement.

B. Length: Horizontal sleeves through finished areas (where sleeve is exposed to

view) shall be sized to be flush with finished surfaces; other horizontal sleeves may terminate flush to 2-inches past the element being penetrated. Vertical sleeves shall be sized to extend one inch above the final floor elevation.

C. Structural Type: Fabricated from schedule 40 steel pipe. Waterstop shall consist of fully welded 2-inch larger diameter collar, minimum 1/4 inch thick steel, located on sleeve so as to be centered within the element being penetrated. Provide waterstop on sleeves where sleeves are installed in the following locations: in cast-in-place concrete, where any part of the sleeve ends are exposed to water, where installed in floors with water-proofing or water stopping membranes, in rooms with floor drains, and where needed for anchoring/support purposes. Prime paint all surfaces with rust-inhibiting paint.

D. Non-Structural Type:

1. Belowground Type:

a. Non-Waterstop Type: Fabricated from any of the following: 18 gauge galvanized sheet metal, 22 gauge spiral seam galvanized steel duct, schedule 40 PVC, HDPE thermoplastic or Schedule 40 galvanized steel pipe.

b. Waterstop Type: Constructed of HDPE thermoplastic or Schedule 40 steel pipe, with waterstop. Waterstop shall consist of 2-inch larger diameter collar, minimum 1/4 inch thick, located on sleeve so as to be centered within the element being penetrated, fully welded (for steel) or bonded/formed (for HDPE) to sleeve. Sleeve shall be suitable for use with “Link-Seal” type seal. Prime paint all surfaces with rust-inhibiting paint.

2. Aboveground Type:

a. Non-Waterstop Type: Fabricated from 18 gauge galvanized sheet metal or 22 gauge spiral seam galvanized steel duct. Provide with galvanized steel angle tabs, collars, or similar to allow for anchoring where sleeve cannot be retained in place by element being penetrated.

b. Waterstop Type: Fabricated from 18 gauge galvanized sheet metal or 22 gauge spiral seam galvanized steel duct. Cold galvanize cut edges of sleeve. Waterstop shall be constructed of same material as sleeve, be fully welded to sleeve, 2-inch larger diameter, located on sleeve to allow sealing of gap between sleeve and element being penetrated.

E. Flexible Type: Flexible cellular elastomeric insulation, complying with ASTM C 534, Type 1, minimum 1/2-inch thick. Water vapor permeance shall not exceed 0.08 perms. Operating Temperature Limits -20 degrees F to 180 degrees F. Provide in sheet or pre-fabricated pipe size; provide multiple wraps as required.

2.3 DUCT SLEEVES

A. Size: Inside dimension of duct sleeves shall be at least 1-inch larger than the outside dimension of the duct or duct covering (for covered duct systems). For duct system conveying air or gases operating above 200 deg F provide sleeve dimension minimum 2-inch larger than duct or duct covering (for covered duct systems). Provide larger sleeves where a larger space around duct exterior is required by code, by duct or flue system manufacturer, to provide required

thermal clearances, where specifically noted, where unusual conditions are present and where required to accommodate large movement.

B. Length: Horizontal sleeves through finished areas (where sleeve is exposed to view) shall be sized to be flush with finished surfaces; other horizontal sleeves may terminate flush to 2-inches past the element being penetrated. Vertical sleeves shall be sized to extend one inch above the finished floor.

C. Structural Type: Fabricated from schedule 40 steel pipe for round openings and 3” x 3” x 3/8” welded steel angles for other openings (unless noted otherwise). Prime paint all surfaces with rust-inhibiting paint.

D. Non-structural:

1. Belowground Type:

a. Belowground on Both Sides of Element Penetrated: Fabricated from 24 gauge spiral seam galvanized steel duct, schedule 40 PVC pipe, HDPE thermoplastic pipe or Schedule 40 galvanized steel pipe for round openings. Fabricate from 18 gauge fully welded galvanized steel for other openings; configured to suit duct.

b. Belowground on One Side of Element Penetrated: HDPE thermoplastic pipe or Schedule 40 galvanized steel pipe with waterstop for round openings configured to suit duct; with waterstop. Fabricate from 1/4-inch thick welded steel plate, per ASTM A36, for other openings. Waterstop shall consist of 2-inch larger diameter collar, minimum 1/4 inch thick, located on sleeve so as to be centered within the element being penetrated, fully welded (for steel) or bonded/formed (for HDPE) to sleeve. Round sleeves shall be suitable for use with “Link-Seal” type seal. Prime paint all surfaces with rust-inhibiting paint.

2. Aboveground Type: 24 gauge spiral seam galvanized steel duct or 20 gauge longitudinal seam galvanized steel duct for round openings. Fabricated of 18 gauge galvanized sheet metal for other openings; configured to suit duct.

E. Flexible Type: Flexible cellular elastomeric insulation, complying with ASTM C 534, Type 1. Water vapor permeance shall not exceed 0.08 perms. Operating Temperature Limits -20 degrees F to 180 degrees F. provide in sheet or pre-fabricated pipe size.

2.4 DUCT CLOSURE COLLARS

A. General: Closure collars shall provide closure of opening between duct and opening in element penetrated and shall abut tight up to and overlap duct and shall consist of rolled angle material (for round ducts) and welded framed angles (for rectangular and round ducts).

B. Size: Closure collars shall be sized to match duct and opening applied to and shall have minimum 2-inch overlap on duct side and 2-inch overlap at opening/penetrated element side but shall completely cover opening in element penetrated with minimum 1-inch overlap to undisturbed element (i.e. wall, floor, etc.).

C. Material: Closure collars shall be fabricated of 20 gauge galvanized steel for ducts 15 inches diameter and less and shall be fabricated of 18 gauge galvanized steel duct for all larger ducts and all square and rectangular ducts.

2.5 FIRESTOP SEALS

A. General: Commercially manufactured through-penetration and membrane-penetration firestop systems to prevent the passage of fire, smoke and gases, and to restore the original fire-resistance rating of the barrier penetrated.

B. Listing: Firestopping shall be listed by UL in “Fire Resistance Directory” (category to match the application), or be qualified by another independent agency acceptable to the AHJ.

C. Rating: Firestop system and devices shall be tested in accordance with ASTM E 814 or UL 1479, with “F” and “T" ratings as required to maintain the fire-resistance rating of the barrier penetrated, and as required by code.

D. Fire Hazard: Materials shall have a flame spread of 25 or less, and a smoke development rating of 50 or less; when tested in accordance with ASTM E 84 or UL 723.

E. Cabling Applications: Firestop systems used with loose electrical cabling shall be the type that allows for removal of the cable or installation of new cables without damage to the firestop system, or the need to replace or repair firestop materials.

F. Insulation: Firestop system shall be applicable to insulated systems to allow the insulation to run continuous through the firestop system (unless noted otherwise).

2.6 NON-FIRESTOP SEALS

A. Indoor Sealants:

1. Smoke or Sound Sealant Applications: For use where a firestop seal is not required, but smoke or sound seal is required. Single component, elastomeric or acrylic latex type sealant with STC ratings per ASTM E90. Sealants shall be of the following types, or approved equal:

   a. 3M “Smoke and Sound Sealant SS100”.

   b. Tremco “Tremstop”.

2. Other Areas - Dry (Not Normally Exposed to Water/Moisture): Single component, latex sealant complying with requirements of ASTM C834. Sealants shall be of the following types, or approved equal:

   a. Tremco Corporation “Tremflex 834”.

   b. Pecora Corporation “AC-20 Arylic Latex”.

   c. Sonneborn Building Products “Sonolac”.

3. Other Areas - Wet (Exposed to Water/Moisture): Single component, mildew resistant silicone sealant complying with requirements of ASTM C920, Type S, Grade NS, Class 25. Color white. Sealants shall be of the following types, or approved equal:

   a. Dow Corning “786 Mildew Resistant Silicone”.

   b. Pecora Corporation “898 Silicone Sanitary Sealant”.

   c. Tremco “Tremsil 200”.

B. Outdoor Sealants:

1. General: Single component, non-sag, low modulus, silicone elastomeric

sealant conforming to requirements of ASTM C920, Type S, Grade NS, Class 100/50. Sealant shall be of the following types, or approved equal.

a. Dow Corning “790 Silicone Building Sealant”.

b. Pecora Corporation “890 Silicone”.

c. Tremco “Spectrem 1”.

2. Adjacent to Aluminum: Single component, non-sag, medium modulus, silicone elastomeric sealant conforming to requirements of ASTM C920, Type S, Grade NS, Class 50. Sealant shall be primer-less type for use in joints adjacent to fluoropolymer coatings. Sealants shall be of the following types, or approved equal:

a. Dow Corning “795 Silicone Building Sealant”.

b. GE Silicones, Momentive, SCS2000 and SCS7000.

c. Pecora “895 Silicone”.

d. Tremco “Spectrem 2”.

C. Expanding Foam Sealant:

1. General: Single component, polyurethane insulating sealant with flame spread index of 25 or less and smoke development rating of 50 or less. Shall expand and fully cure within 24 hours to a semi-rigid, closed cell, water and air resistant foam. Sealant shall be of the following types, or approved equal.

a. DAP “Kwik Foam”.

b. Fomo Products ”Handi-Foam”.

c. Todol Products “EZ Flo Gun Foam”.

D. Full Water Immersion Sealant: Polysulfide or Polyurethane; ASTM C920, M or Type S, Grade NS, Class 25, uses M and A; approved by manufacturer for “continuous water immersion”, single or multi-component.

1. Tremco “Vulkem 116”.

2. Sonneborn “Sonalastic Polysulphide Sealant”.

E. Link Seal: Seals shall consist of interlocking synthetic rubber links shaped to continuously fill the annular space between the pipe and wall opening. The seal assembly shall expand when mechanically tightened to provide an absolute water-tight seal between the pipe and wall opening. Sizing shall be per manufacturer's recommendations. Seal shall be Pipeline Seal and Insulator, "Link-Seal" (or approved).

F. Specialty: Packed fiberglass or wool insulation; with silicone sealant rated for use with temperatures and other conditions encountered.

G. Grout: ASTM C 1107, Grade B, post-hardening and volume-adjusting, dry, hydraulic-cement grout. Nonshrink; recommended for interior and exterior applications.

1. Design mix shall provide 5000-psi, 28-day compressive strength. Premixed and factory packaged.

PART 3 EXECUTION

3.1 PIPE SLEEVES

A. General: Provide sleeves for all piping passing through walls, floors, partitions, roofs, foundations, footings, grade beams, and similar elements. Except that sleeves are not required at core drilled penetrations through solid concrete or where formed openings equivalent to a core drilled opening are provided. Sleeves shall be the following type (horizontal/vertical refer to position of sleeve):

1. Horizontal, Belowground:
   a. Belowground on Both Sides of Element Penetrated: Non-structural, belowground, non-waterstop type; except that penetrations of footings shall be structural type.
   b. Belowground on One Side of Element Penetrated: Structural type.
2. Horizontal, Aboveground:
   a. Concrete and Masonry Walls: Structural type.
   b. Other Walls: Non-structural type
3. Vertical, Slab on Grade: Structural type; except at piping serving individual fixtures or individual heating units in finished areas, the flexible type may be used. Where not installed to be concealed (as in a plumbing chase) install height of flexible type so it is concealed by the floor finish, cabinet base, or an escutcheon.
4. Vertical, Not Slab on Grade:
   a. Concrete Floors/Roofs: Structural type.
   b. Other Floors/Roof: No sleeve required unless needed as part of the seal system or specifically noted to be provided (i.e. for acoustic, thermal, seal retention, or other purposes). Provide clearances around pipe same as a sleeve would provide (see specified sleeve size).

B. Installation: Set sleeves plumb or level (or sloped as required for sloped pipes) in proper position, tightly fitted into the work. Set sleeves properly in element for specified projection past adjacent surfaces (see sleeve product specification); cut ends of sleeve as necessary.

C. Insulation: Insulation shall run continuous through sleeves (unless noted otherwise).

3.2 DUCT SLEEVES

A. General: Provide sleeves for all ducts passing through walls, floors, partitions, roofs, foundations, footings, grade beams, and similar elements, except that sleeves are not required at core drilled penetrations through solid concrete or where formed openings equivalent to a core drill and provided and where no floor drain serves the room where the penetration occurs. Sleeves shall be the following type aboveground:

1. Horizontal, Belowground:
   a. Belowground on Both Sides of Element Penetrated: Non-structural, belowground, non-waterstop type.

b. Belowground on One Side of Element Penetrated: Structural type.

2. Horizontal, Aboveground:

a. Concrete and Masonry Walls: Structural type.

b. Other Walls: Non-structural type.

3. Vertical, Slab on Grade: Structural type.

4. Vertical, Other than Slab on Grade:

a. Concrete Floors/Roofs: Structural type.

b. Other Floors/Roof: No sleeve required unless needed as part of the seal system or specifically noted to be provided (i.e. for acoustic, thermal, seal retention, or other purposes). Provide clearances around pipe same as a sleeve would provide (see specified sleeve size).

B. Installation: Set sleeves plumb or level (or sloped as required for sloped duct) in proper position, tightly fitted into the work. Set sleeves properly in element for specified projection past adjacent surface (see sleeve product specification); cut ends of sleeve as necessary.

C. Insulation: Insulation shall run continuous through sleeves (unless noted otherwise).

3.3 DUCT CLOSURE COLLARS

A. General: Closure collars shall be provided for all exposed ducts on each exposed penetration where the duct passes through any floors, walls, ceilings, roofs, partitions, and similar elements. Closure collars shall additionally be provided where so noted on the drawings and at all duct penetrations into mechanical rooms, boiler rooms, and rooms housing mechanical equipment (on both sides of the penetration).

B. Installation: Collar shall be installed tight against surfaces and shall fit snugly around the duct or duct covering. Sharp edges of the collar around insulated duct shall be ground smooth to preclude tearing or puncturing the insulation covering or vapor barrier of insulated ducts. Collars shall be anchored to element penetrated, with fasteners appropriate to material fastening to, on maximum 6 inch centers.

3.4 FIRESTOP SEALS

A. General: At each through-penetration and membrane-penetration in rated assemblies, where required to limit the passage of smoke, and as required by code or in the Contract Documents, provide a firestop system. Firestop system shall be installed in accordance with the manufacturer's instructions and listing.

B System Selection: Contractor is responsible to select the firestop systems to be utilized, corresponding to the construction of the assembly penetrated, and types of penetrations. Contractor shall submit proposed firestop systems to be utilized, shall also review such systems with the AHJ and obtain AHJ approval.

C. Preparation: Prepare surfaces as recommended by firestop material manufacturer. Examine and confirm that conditions are acceptable to proceed with the installation. Provide maskings and temporary coverings to prevent contamination or defacement of adjacent surfaces.

D. Installation Review:

1. Notify Architect/Engineer when firestopping work is complete and ready for review. Provide minimum 7 days notice to allow scheduling of review. An independent testing agency may be utilized to perform an inspection.
2. Notify AHJ when firestopping work is complete and ready for inspection. Provide sufficient advance notice to allow scheduling of the inspection without adversely impacting project schedule.
3. Do not cover or conceal firestopping until all inspections have been satisfactorily completed.

3.5 NON-FIRESTOP SEALS

A. General: Provide seals around all ducts, conduit, and piping passing through sleeves, walls, floors, roofs, foundations, footings, partitions, and similar elements. Seals shall be watertight where the penetration may be exposed to water or moisture. Provide type of sealant to suit the application. Provide smoke and sound type at all penetrations of rooms which contain mechanical equipment on both side of element penetrated to a depth of 5/8-inch (unless noted otherwise).

B. At Sleeves:

1. Between Sleeve and Penetrated Element: Fill openings around outside of pipe sleeve with same material as surrounding construction, or with material of equivalent fire and smoke rating and properties that allow a tight seal between the sleeve and the surrounding construction. Seal full depth of sleeve for vertical penetrations.
2. Between Pipe and Inside of Sleeve: Provide sealant between outside of pipe or pipe covering (for covered piping systems) and inside of sleeve. Seal depth shall be minimum 1-inch each side. Provide Link Seal type for belowground penetrations, vault wall penetrations, and slab-on-grade penetrations (not required where flexible type sleeves are used).

C. No Sleeves: Provide “Link-Seal” type for belowground penetrations, vault wall penetrations, and slab-on-grade penetrations. Provide sealant at other areas, type to suit the application. Fully seal between outside of pipe or pipe covering (for covered piping systems) and surrounding construction. Seal depth shall be minimum 1-inch each side.

D. Plumbing Fixtures: Provide sealant between fixture and abutting building surfaces. Seal so no water or overspray from fixture can enter building construction. See Section 22 40 00.

E. Preparation: Remove loose materials and foreign matter impairing adhesion of seal. Perform preparation in accordance with recognized standards and sealant manufacturers recommendations. Protect elements surrounding area of work from damage or disfiguration due.

F. Installation: Install sealants immediately after joint preparation. Install sealants free of air pockets, foreign embedded matter, ridges, and sags. Tool exposed joint surface concave and with a neat finished appearance.

END OF SECTION

SECTION 20 05 48 – VIBRATION AND SEISMIC CONTROLS FOR MECHANICAL

PART 1 GENERAL

1.1 RELATED DOCUMENTS

A. Drawings and general provisions of the Contract, including General and Supplementary Conditions and Division 00 and Division 01 Specification Sections, apply to this Section.

B. Requirements of Section 20 05 00 apply to this Section.

1.2 WORK INCLUDED

A. Vibration Isolation

B. Seismic Restraints

1.3 DEFINITIONS

A. "Equipment" is defined to mean any item with power connections (fans, HV units, AHU units, etc.), and also to include all hoods; but does not include pumps less than 3 hp.

B. "Equipment Requiring Vibration Isolation" is defined to be any equipment (as defined above) with rotating components (e.g. pumps, fans, etc.).

1.4 SUBMITTALS

A. General: Submittals shall comply with Section 20 05 00.

B. Product Data:

1. Submit product data on all items to be used.
2. Submit calculations showing vibration isolation selection for all isolation devices provided under this specification section (i.e. where isolation is not furnished integral with the equipment or by the manufacturer of the equipment).

C. Shop Drawings: Submit shop drawings for all fabricated support assemblies.

D. Submit calculations showing seismic restraint calculations, restraint selection, proposed locations of all seismic control bracing, and details of bracing construction.

1.5 GENERAL REQUIREMENTS - VIBRATION ISOLATION

A. General:

1. Select and provide all vibration isolation devices for all equipment requiring vibration isolation so as to provide complete installed mechanical systems free of the transmission of vibration and vibration generated noise to the structure.
2. Vibration isolation is shown on the drawings for various items but is not shown for all items requiring isolation. Provide all isolation as indicated and specified herein.

B. Supplier: Where not provided by the equipment manufacturer, all vibration isolation devices and support assemblies shall be supplied as a coordinated package by a single vibration isolation manufacturer, under this specification

section.

C. Equipment Manufacturer Items: Isolation devices furnished by equipment manufacturer shall comply with this specification section and be selected by the manufacturer to suit, and provide satisfactory performance, for the applications of this project.

1.6 GENERAL REQUIREMENTS - SEISMIC RESTRAINTS

A. General: Mechanical equipment, piping, and ductwork seismic restraints are typically not shown on the drawings but are to be provided as specified herein. Contractor is responsible to select and provide all seismic anchoring devices for all mechanical equipment, all piping, and all ductwork.

B. Fire Sprinkler: Seismic bracing for fire sprinkler system shall be as specified per NFPA 13 but in no case be less than that required in this Section.

C. Seismic Restraint Systems:

1. The Contractor shall retain a specialty consultant or equipment manufacturer to develop a seismic restraint system and perform seismic calculations in accordance with code and requirements specified in this section. Calculations, restraint selections, and installation details shall be done by a professional experienced in seismic restraint design and installation and licensed in the State where the project is located.

2. The seismic design, consisting of calculations, restraint selection, installation details, and other documentation, shall be submitted. This submittal shall be signed and sealed by a professional Engineer.

3. The seismic restraint design shall clearly indicate the attachment points to the building structure and all design forces (in X, Y, and Z direction) at the attachment points. The seismic restraint engineer shall coordinate all attachments with the building's structural engineer of record, who shall verify the attachment methods and the ability of the building structure to accept the loads imposed.

4. The seismic restraint design shall be based on actual equipment data (dimensions, weight, center of gravity, etc.) obtained from submittals or the manufacturers. The equipment manufacturer shall verify that the attachment points on the equipment can accept the combination of seismic, weight, and other loads imposed.

5. Analysis should include calculated dead loads, static seismic loads, wind loads, and the capacity of materials utilized for the connection of the equipment or system to the structure. Analysis should detail anchoring methods, anchoring materials, anchor sizes, embedment, and related details. All seismic restraint devices should be designed to accept, without failure, the calculated seismic forces.

6. Forces shall be calculated in accordance with accepted engineering practice and code requirements, using appropriate seismic "zone" and other factors for the building type, systems involved, and project location.

7. This project's building is considered a "non-essential" facility.

1.7 REFERENCES

A. IBC: International Building Code.

B. IMC: International Mechanical Code.

C. MASON: Mason Industries Seismic Restraint Guidelines for suspended piping, Ductwork, Electrical Systems and Floor Mounted Equipment, 2005 6th Edition.

D. OSHPD: Office of Statewide Health Planning and Development, State of California, Fixed Anchorage.

E. SMACNA/SRM: Seismic Restraint Manual Guidelines for Mechanical Systems, 2nd Edition.

F. UPC: Uniform Plumbing Code.

PART 2 PRODUCTS

2.1 ACCEPTABLE MANUFACTURERS

A. Products shall comply with Section 20 05 00, Paragraph 2.1, Acceptable Manufacturers.

B. Products: Mason, Peabody, Kinetics Noise Control, Vibration Eliminators, VMC Group.

C. Expansion Devices/Flexible Connectors: Unisource Manufacturing, Twin City Hose, and as specified in Section 20 05 19, 23 21 13, and 23 33 00.

2.2 NEOPRENE ISOLATORS

A. Isolation Pads: Oil resistant bridge bearing neoprene pads, minimum 3/4-inch thick, with cross-ribbed or waffle design. Size pads for not more than 50 psi or as recommended by vibration isolator manufacturer. Provide load distribution plates (minimum 3/8" plate steel) to evenly load pads. Mason Type SW (or approved).

B. Floor Mounted Isolators: Double deflection neoprene mounts, sized for minimum deflection of 0.30-inch. All metal surfaces shall be neoprene covered, base plate shall have mounting holes, and top shall have threaded steel plate or threaded steel insert. Element shall be color coded or labeled with molded symbols to identify capacity. Neoprene shall be bridge bearing type. Mason Series ND (or approved).

C. Suspension Isolators: Double deflection neoprene type, with isolator encased in open steel bracket, and sized for minimum 0.30-inch deflection. Hanger rod shall be isolated from steel bracket with neoprene grommets. Mason Series HD (or approved).

D. Washer Bushings: Bridge bearing neoprene washer insert to provide isolation between anchor bolt and washer from support member/equipment. Mason Series HG (or approved).

2.3 SPRING ISOLATORS

A. General: The load carried by each isolator shall be carefully calculated and isolators selected so that the static deflection will be the same and the supported equipment will remain level. Isolators shall be so designed that the ends of the springs will remain parallel during and after deflection to operating height. At

operating height, springs shall have additional travel to complete (solid) compression equal to at least 50 percent of the operating deflection. Suspension isolator springs shall have a static deflection not less than 1-inch (unless noted otherwise), except that for units with components rotating at 1000 rpm and less, the static deflection shall be not less than 2-inches (unless noted otherwise). Floor isolator springs shall have deflection of not less than 1-inch. All isolators shall provide at least 95% isolation efficiency. Deflections other than these may be used where circumstances warrant and more optimum isolation results can be achieved; provided that a written explanation is submitted for Engineer review and approval.

B. Floor Type Spring Isolators: Open spring type with ratio between spring diameter divided by compressed spring height no less than 0.8. A ribbed neoprene acoustical friction pad shall be bonded to the underside of the isolator. Shall have bolted connections for rigid attachment to equipment, configured to allow for equipment leveling by bolt adjustment. Provide with height saving bracket. Mason Series SLF (or approved).

C. Floor Housed Type:

1. Ductile Iron: Housed spring isolator with ductile iron housing, base plate with mounting holes, spring inspection ports, neoprene cushion, adjustable upward rebound plate. OSHPD pre-approved. Provide with mounting brackets to suit equipment connected to. Mason Series SSLFH (or approved).

2 Welded Steel: Housed spring isolator with welded steel housing, steel base plate with mounting holes, number of springs to suit application, neoprene vertical limit stops, spring bottom neoprene acoustical cups, bottom non-skid neoprene friction pad, and equipment attachment configuration to suit equipment served. OSHPD pre-approved. Provide with mounting brackets to suit equipment connected to. Mason Series SLR or SLRSO (or approved).

D. Suspension Type Spring Isolators: Shall consist of a rigid steel frame with a stable steel spring in the bottom part of the frame, and double deflection neoprene (or rubber) isolating pad at the top of the frame. Where supporting rods pass through the frame, a clearance of not less than one-half rod diameter shall be provided all around the rod and neoprene bushings provided to prevent steel to steel contact. Mason Series DNHS or Series 30N (or approved).

E. Vibration Isolating Roof Curbs-HVAC Equipment Applications: Shall be type as specified in the equipment specification section; where not indicated may be of either style specified:

1. Curb Mount: Separate spring mounted curb for mounting on top of HVAC unit manufacturer's standard curb, with size, configuration, and capacity to suit equipment served. Shall be of extruded aluminum construction, with welded corners and supporting members, and electro-plated steel spring isolators. Spring isolators shall provide minimum 1" deflection, with minimum 50% travel to solid, spring diameter shall be no less than 0.8 of the spring height at the rated load. Spring isolators shall be sized by vibration isolation curb manufacturer to suit equipment weight served. Curb shall have internal resilient snubbers and suitable clearances to accommodate unit movement under normal wind forces (up to 35 mph) without hindering normal spring

action. Curb shall remain captive under anticipated maximum seismic and wind forces, unless an exterior anchoring means is utilized. Curb shall be designed with top member overlapping the bottom member to allow for water runoff, and shall have a flexible EPDM continuous perimeter weather seal between these two members. Where unit length exceeds 10 feet, unit may be shipped in sections with a field splice kit to join sections; splice kit shall include overlapping EPDM and overlapping top and bottom members. All hardware shall be cadmium or zinc electroplated. Assembly shall have self adhering closed cell sponge gasketing, to be applied between curb and vibration isolation assembly, and between vibration isolation assembly and HVAC equipment.

2.4 SEISMIC RESTRAINTS

A. General: Comply with code, SMACNA-SRM and MASON.

B. Materials:

1. Steel shall be per ASTM A36; hangers and other devices shall be per Section 20 05 29 and as shown in SMACNA-SRM or MASON. Sheet metal used for bracing shall be no less than 16 gauge. Material for straps shall be galvanized steel, no less than 18 gauge.

2. Cabling: Cables shall be minimum 1/8" diameter, 7 x 19 strand, galvanized steel with clear vinyl coating. Provide with galvanized thimble, clamps, and accessories. End termination and clamping/application shall comply with SMACNA-SRM.

C. Flexible Connectors:

1. Piping Systems:

a. Flexible Connectors: As specified in Section 20 05 19.

b. Seismic “V” Connectors: "V" design connector with braided hose and attachment fittings. Shall be constructed of type 321 stainless steel hose and braid with carbon steel elbows and ends (for steel piping systems); and bronze hose and braid with copper elbows and ends (for copper piping systems). Unit shall allow for 2" movement in all planes, and have minimum 150 psi working pressure at the system temperature installed. Unisource Manufacturing (or approved).

2. Ductwork: Flexible connectors as specified in Section 23 33 00.

PART 3 EXECUTION

3.1 VIBRATION ISOLATION

A. General: Provide vibration isolators for all rotating equipment so that no vibration is transmitted to the structure. Isolators shall be the type indicated; except where not shown, type shall be as selected by vibration isolation manufacturer (or equipment manufacturer) to provide adequate isolation.

B. Installation: Install all vibration isolators in accordance with isolator manufacturer's instructions and isolated equipment manufacturer's recommendations.

C. Inadequate Isolation: Should vibration isolators prove inadequate to prevent transmission of vibrations to the building structure or limit equipment vibration generated noise, such isolators shall be replaced with isolators having the largest deflection that can be practically installed or otherwise modified/replaced to produce satisfactory isolation. Such replacement shall be at no additional cost to the Owner.

D. Equipment with Rotating Components not Requiring Isolation:

1. In-line and sump type pumps.
2. Rooftop curb mounted fans.
3. Rooftop HVAC units.

3.2 SEISMIC RESTRAINTS

A. General: Provide seismic restraints as required by code and as specified. Comply with SMACNA-SRM, and MASON. Anchoring system and restraints shall be able to withstand anticipated seismic forces. Coordinate with equipment manufacturers for proper equipment anchor attachments to withstand anticipated forces. Coordinate with project structural engineer for attachment of seismic restraints to building.

B. Piping: Longitudinal and transverse bracing shall be required for all piping 2-1/2-inch diameter and larger and on all fuel gas piping 1-inch and larger. Bracing shall be applied as follows:

1. Transverse bracing shall occur at maximum intervals of 40 feet, except on fuel gas piping on maximum intervals of 20 feet.
2. Longitudinal bracing shall occur at maximum intervals of 80 feet, except on fuel gas piping on maximum intervals of 40 feet. Transverse bracing for one pipe section may also act as a longitudinal bracing for a pipe section connected perpendicular to it, if the bracing is installed within 2 feet of the elbow or tee of similar size. Piping conveying fluids at 100 degrees F and higher shall have expansion devices provided in-between longitudinal braces to allow for thermal expansion.
3. Bracing may be omitted when the top of the pipe is suspended 12 inches or less from the supporting structural member and the pipe is suspended by an individual hanger.

C. Ductwork: Longitudinal and transverse bracing shall be required for all round ducts 28 inches in diameter and larger, for rectangular ducts 6 square feet and larger, and on all duct systems used for life safety and smoke control installed in either the horizontal or vertical position. Bracing shall be applied as follows:

1. Transverse bracing shall occur at maximum intervals of 30 feet (20 feet for essential facilities), at each duct turn and at the end of a duct run.
2. Longitudinal bracing shall occur at maximum intervals of 60 feet (40 feet for essential facilities). Transverse bracing for one duct section may also act as longitudinal bracing for a duct section connected perpendicular to it, if bracing is installed within 4 feet of the intersection and sized and installed on the larger duct.
3. Groups of ducts may be combined in a larger size frame using overall

dimensions and maximum weight of ducts. At least two sides of each duct must be connected to the angles of the brace.

4. Walls, including non-bearing fixed partitions which have ducts running through them, may replace a transverse brace.
5. Bracing may be omitted when the top of the duct is suspended 12 inches or less from the supporting structural members and on roof top ductwork.

D. Equipment:

1. Equipment Not Requiring External Vibration Isolation:
   a. General: Shall be rigidly connected to the structure per Section 20 05 29. Restraints (where required) shall utilize welded steel frames, steel braces, straps, or cables. Provide elastomeric (or neoprene) pads (1/4" thick) between seismic straps and equipment.
   b. Base Mounted Equipment:
      1) Provide anchorage per Section 20 05 29 and bracing as needed to maintain equipment anchorage with anticipated seismic forces.
      2) All equipment shall have seismic bracing where the height of the equipment is 3 or more times the smallest base dimension and where the equipment anchorage alone is not adequate to maintain equipment anchorage with anticipated seismic forces.
      3) All water heaters shall have seismic bracing. Equipment which utilizes (or contains) flammables, combustibles, or hazardous materials shall have seismic bracing where the equipment anchorage alone is not adequate to resist anticipated seismic forces.
   c. Other Equipment: All equipment located 31" or more from the point of attachment to the supporting structure shall have seismic bracing. Equipment which utilizes (or contains) flammables, combustibles, or hazardous materials shall have seismic bracing.
2. Equipment with External Vibration Isolation:
   a. General: Restraints shall not impede operation of vibration isolators, and shall use methods complying with SMACNA-SRM or MASON.
   b. Base Mounted Equipment:
      1) All equipment shall have seismic bracing where the height of the equipment is 3 or more times the smallest base dimension and where the equipment vibration isolation components are not adequate to maintain equipment in place with anticipated seismic forces.
      2) Provide housed spring isolators, seismic snubbers, padded welded steel angle restraint assembly (with minimum 1/4" clearance between pad and equipment), or slack cable restraints.
   c. Other Equipment:
      1) All equipment located 31" or more from the supporting structure shall have seismic bracing. Equipment which utilizes (or contains) flammables, combustibles, or hazardous materials shall have shall have seismic bracing.

2) Utilize slacked cable bracing to accommodate equipment movement due to vibration isolator operation but installed so as to prevent more than 2-inch movement in any direction.

E. Bracing Arrangements:

1. Do not use branch ducts or piping to brace main runs or consider as braces for equipment.

2. Do not brace items to dissimilar parts of a building or dissimilar building systems that may respond in a different mode during an earthquake. (Examples: wall and roof, solid concrete wall and lightweight roof, existing building structure and new isolated building structure.)

F. Building Expansion Joints: At building expansion joint crossings, provide seismic "V" connectors in piping allowing at least 1 inch movement in all directions and flexible connectors in ductwork (on both sides of expansion joint) allowing at least 1/2 - inch movement in all directions. Provide multiple connectors as required. Provide flexible connectors in ductwork in four places, and of sufficient length to allow relative duct movement (i.e. from one side of building expansion joint to the other) of at least 1-inch in all directions; provide hanger types that will not hinder such movement.

3.3 TEST AND INSPECTION

A. Field Inspections: Prior to initial operation, the vibration isolators and seismic devices shall be inspected for conformance to drawings, specifications, and manufacturer's data and instructions. Check all flexible connectors/expansion devices for proper location, guiding, and end anchoring.

B. Vibration Isolator Inspection: After installation of isolators and seismic restraint devices, remove all shipping blocks and other items that may prevent proper isolator operation. Inspect isolators to verify that the machinery moves freely on its spring isolators within limits of stops or seismic restraint devices. Eliminate or correct interferences.

C. Tests: Check for vibration and noise transmission through connections, piping, ductwork, foundations, and walls. Adjust, repair, or replace isolators as required to reduce vibration and noise transmissions to specified levels. Re-balance, adjust, or replace machinery with noise or vibration levels in excess of those given in the machinery specifications or machinery manufacturer's data. Check for proper operation of expansion devices and associated items during system warm-up.

END OF SECTION

SECTION 20 05 90 – UNDERGROUND UTILITIES EXCAVATION AND FILL FOR MECHANICAL

PART 1 GENERAL

1.1 RELATED DOCUMENTS

A. Drawings and general provisions of the Contract, including General and Supplementary Conditions and Division 00 and Division 01 Specification Sections, apply to this Section.

B. Requirements of Section 20 05 00 apply to this Section.

1.2 WORK INCLUDED

A. Excavation

B. Trenching

C. Shoring and Trench Protection

D. Bedding

E. Backfilling

F. Compaction

G. Verification of Existing Utilities

H. Protection of Utilities

I. Dewatering

J. Identification Warning Tape

1.3 DEFINITIONS

A. “Utility Bedding” is defined to mean “material placed beneath the utility for utility support, and material placed adjacent to the utility to the centerline of the utility.”

B. “Utility Zone Backfill” is defined to mean “backfill material that is placed in the area from the centerline of the utility up to the specified height above the top of the utility, and is located above the utility bedding and below the final backfill material.”

C. “Trench Backfill” is defined to mean “backfill material that is placed above the utility zone backfill, and up to rough or finished grade.”

D. “Underground Mechanical Structures” are defined to mean “vaults, tanks, interceptors, separators, manholes, and similar structures buried partially or completely underground.”

E. “Unstable Material” is defined to mean “material that depresses more than 1/4-inch under a load of 2000 pound/square foot, is not firm and stable, or in any way appears incapable of supporting the loads to be imposed.”

1.4 QUALITY ASSURANCE

A. Inspection of Job Conditions: Prior to starting work and during work, the installer shall examine the work by others, site and job conditions under which excavation, trenching, and backfilling for underground mechanical utilities work will be performed, and not proceed with work until unsatisfactory conditions have

been corrected.

B. Codes and Standards: Comply with all applicable codes and standards.

C. Experience: Only contractors fully experienced and entirely knowledgeable in the type of work required shall work on this project. By providing bids for this project the Contractor is acknowledging that he has such expertise, and will staff the project with personnel experienced and knowledgeable in the work to be performed.

1.5 GENERAL REQUIREMENTS

A. Safety: Contractor is solely responsible for worker safety and for selecting and designing all trench shoring methods, trench protection methods, site utility protection means and other aspects of the work. All such means, methods, and safety measures shall comply with applicable codes and standards, and the requirements of the Contract Documents.

B. Coordination: Coordinate all work with other trades. Coordinate with other Divisions the location and termination of all work of other trades and interconnections with Division 20 work.

C. Scheduling: Schedule work to avoid impacts to other trades due to open trenches, dewatering, and other activities.

D. Existing Utilities: Verify location of all existing utilities that lay in the route of intended work. Verify the location of all existing utilities that will be connected to prior to beginning work for any new utilities.

E. Discrepancies: Notify the Architect/Engineer of any discrepancies or conflicts within the Contract Documents or between the Contract Documents and field conditions. Do not proceed with any work or purchasing of any materials for the area(s) of conflict until obtaining written instruction from the Architect/Engineer on how to proceed. Any work done after discovery of such discrepancies or conflicts and prior to obtaining the Architect/Engineer's instructions on how to proceed, shall be done at the Contractor's expense. In case of a conflict between Division 20 requirements and other project requirements, the most stringent and expensive (as judged by the Architect/Engineer) shall prevail.

1.6 REFERENCES

A. ASTM D 1557, Laboratory Compaction Characteristics of Soil Using Modified Effort.

B. ASTM D 2487, Soils for Engineering Purposes (Unified Soil Classification System).

C. WSDOT Standards: Washington State Department of Transportation, Specifications for Road, Bridge, and Municipal Construction, 2014 Edition.

PART 2 MATERIALS

2.1 GENERAL MATERIALS

A. General: All materials used for bedding, backfill, and drainage purposes shall be free of debris, roots, wood, vegetation, refuse, soft unsound material, frozen material, deleterious or other objectionable material.

B. Sand: Clean, free flowing, coarse grade sand, as defined by ASTM D 2487.

C. Pea Gravel: 3/8-inch washed pea gravel; durable particles composed of small, smooth, rounded stones or pebbles meeting the following for grading and quality:

Sieve Size	Percent Passing (By Weight)
1/2" square	100
3/8" Square	85-100
5/8" Square	50-100
U.S. No. 4	10-30
U.S. No. 8	0-10
U.S. No. 16	0-5

2.2 BEDDING MATERIALS

A. Standard: Gravel backfill material, with characteristics of size and shape to allow for compaction, no dimension exceeding 1-1/2 inches, and meeting the following for grading and quality:

Sieve Size	Percent Passing (By Weight)
1-1/2" Square	100
1" Square	75-100
5/8" Square	50-100
U.S. No. 4	20-80
U.S. No. 40	3-24
U.S. No. 200	10.0 max.
Sand Equivalent	35 min.

B. Special: Pea gravel or sand (per paragraph titled “General Materials”).

C. Bedding Material Application:

Utility	Bedding Material	Minimum Thickness*
Cast Iron Piping	Standard (or Special)	4"
Steel Piping/Conduit	Standard (or Special)	4"
Ductile Iron Piping	Standard (or Special)	4"
Plastic Piping/Conduit	Special**	4"
Copper Piping	Special	4"
Conductors/Cable	Special	4"

* Below bottom of utility (unless noted otherwise).

2.3 UTILITY ZONE BACKFILL MATERIALS

A. Standard: Same as specified for standard bedding materials.

B. Special: Minus 3/8"-inch washed gravel, or sand.

C. Utility Zone Backfill Material Application:

Utility	Backfill Material Thickness***	Minimum
Cast Iron Piping	Standard (or Special)	4"
Steel Piping/Conduit	Standard (or Special)	4"

Ductile Iron Piping	Standard (or Special)	4"
Plastic Piping/Conduit	Special	4"
Copper Piping	Special	4"
Conductors/Cable	Special	4"
Non-metallic Ductwork	Special	4”
Metallic Ductwork (Encased in Concrete)	Standard	6”
Underground Mechanical Structures	Special	12”

*** Above top of utility (unless noted otherwise).

2.4 PIPE TRENCH BACKFILL

A. Standard: Gravel backfill material, with size and shape to allow for compaction, no dimension exceeding 3 inches, and meeting the following:

Sieve Size	Percent Passing (By Weight)
2-1/2" Square	75-100
U.S. No. 4	22-100
U.S. No. 200	0-10
Dust Ratio	2/3 max.
Sand Equivalent	30 min.

B. Satisfactory Native Material: Excavated material from trenching (or other excavation on site), complying with 2.1 A., having no clods or rocks greater than 3 inches in any dimension.

C. Material Application: Either standard or satisfactory native materials may be used (unless noted otherwise).

2.5 DUCT TRENCH BACKFILL

A. Standard: Gravel backfill material, with size and shape to allow for compaction, no dimension exceeding 3 inches, and meeting the following:

Sieve Size	Percent Passing (By Weight)
2-1/2" Square	75-100
U.S. No. 4	22-100
U.S. No. 200	0-10
Dust Ratio	2/3 max.
Sand Equivalent	30 min.

(Based on WSDOT 2014, 9-03.19, modified for 2-1/2" Sieve size).

B. Satisfactory Native Material: Excavated material from trenching (or other excavation on site), complying with 2.1 A., having no clods or rocks greater than 3 inches in any dimension.

C. Material Application: Either standard or satisfactory native materials may be used (unless noted otherwise).

2.6 GENERAL BACKFILL MATERIALS

A. Utility Foundation Backfill: Class A per WSDOT 2014, 9-03.12 (1) A.

B. Drain Backfills: Gravel backfill for drains shall conform to the following gradings:

Sieve Size	Percent Passing (By Weight)
1" Square	100
3/4" Square	80-100
3/8" Square	10- 40
U.S. No. 4	0-4
U.S. No. 200	0-2

C. Drywell Backfills: Gravel backfill for drywells shall conform to the following gradings:

Sieve Size	Percent Passing (By Weight)
1-1/2" Square	100
1" Square	80-100
3/4" Square	0-20
3/8" Square	0-1.5

D. Underground Mechanical Structure Backfill: Excavated material from trenching (or other excavation on site), complying with 2.1 A. (from top of utility zone backfill layer up to rough or finished grade).

E. Conductors/Cables/Raceway: Excavated material from trenching (or other excavation on site), complying with 2.1 A. (from top of utility zone backfill layer up to rough or finished grade).

2.7 BURIED UTILITY WARNING AND IDENTIFICATION TAPE

A. General: Polyethylene plastic tape manufactured specifically for warning and identification of buried utility lines. Tape shall be minimum 6" wide, acid and alkali resistant.

B. Detectable Type: Minimum 0.004 inch thick, with integral wire, foil backing, or other means to allow detection of tape location. Encase metallic element in protection jacket or other means to provide corrosion protection.

C. Non-Detectable Type: Minimum 0.003 inch thick.

D. Labeling: Tape shall be imprinted with bold black capital letters continuously and repeatedly over the entire tape length. Warning shall read “CAUTION BURIED (utility type) BELOW” or similar wording. Lettering identifying the utility type shall match as closely as possible the designation noted on the plans. Tape lettering shall be permanent and be unaffected by moisture or other materials contained in trench backfill.

E. Tape Colors:

Utility	Color
Electric	Red
Fire/Water	Blue
Sewer	Green
Storm	Green
Gas	Yellow
Water	Blue

PART 3 EXECUTION

3.1 GENERAL

A. Shoring and Trench Protection: Contractor is responsible to design and provide all necessary trench shoring and trench protection to:

1. Provide safe conditions.
2. Provide conditions that comply with applicable codes and AHJ requirements.
3. Prevent undermining of pavement, foundation, slabs, utilities, and other structures.
4. Prevent movements in adjacent slopes or banks.

B. Workmanship: Work shall abide by best professional practices as described in referenced standards, and as recognized by accredited professionals.

C. Compaction: Provide compaction to percent indicated per ASTM D 1557, of laboratory maximum density. Compact to 95 percent (unless noted otherwise). Compaction shall be accomplished by approved tamping rollers, pneumatic-tired rollers, three-wheel power rollers, or other approved compaction equipment.

D. Grading: Provide grading to prevent surface water from flowing into areas of work to maintain the stability of the work area, and suitable working conditions.

E. Dewatering: Provide dewatering system for the collection and disposal of surface and subsurface water encountered during construction in order to maintain conditions suitable for the work. Provide all pits, drainage conveyances, pumps, dikes, etc. as required to accomplish the work.

F. Underground Utilities: Location of utilities indicated is approximate. Verify the location of all existing utilities prior to beginning work; utilize field electronic detection equipment, pipe cameras, visual site surveys, and careful exploratory digging at key locations. Coordinate with other trades routing and locations of all new utilities to avoid conflicts and ensure proper connections.

G. Machinery and Equipment: Movement of construction machinery and equipment over buried and backfilled pipes during construction shall be at the Contractor's risk. Repair, or remove and provide new pipe for existing or newly installed pipe that has been displaced or damaged. Pressure testing of piping before final Owner acceptance is required to verify no damage has occurred.

H. Protection: Protect all areas of work from traffic, erosion, weather, settlement or other damaging effects. Protect all existing utilities from damage.

I. Jacking, Boring and Tunneling: Unless otherwise indicated, excavation shall be by open cut, except that sections of a trench may be jacked, bored or tunneled if the utility can be safely and properly installed and backfill can be properly tamped in such sections.

J. Buried Warning and Identification Tape: Provide buried utility lines with utility identification tape. Bury tape 12 inches below finished grade. Provide detectable type over non-metallic piping systems. Piping systems installed within the building footprint does not require identification tape.

3.2 EXCAVATION - GENERAL

A. General: Provide all excavation as necessary to allow for the work indicated.

Excavations for underground mechanical structures shall be sufficient to provide a minimum of 12 inches clearance between their surfaces and the sides of the excavation.

B. Excavated Material:

1. Stockpiles: Stockpile materials satisfactory for backfilling in an orderly manner at a safe distance from the excavation to avoid overloading the sides of the excavated area and to prevent slides or cave-ins.

2. Protection: Protect stockpiles from contamination with unsuitable backfill materials. Provide adequate drainage at stockpiled areas to prevent water retention in material. If the Contractor fails to protect the stockpiles and any material becomes unsatisfactory as a result, such material shall be removed and replaced with satisfactory on-site or imported material from approved sources at no additional cost to the Owner.

3. Disposal: Excavated material not required or not satisfactory for backfill or other uses on site shall be removed and disposed off site.

3.3 TRENCH EXCAVATION

A. General: Excavate trenches to accommodate utility, required utility slopes, depths of connecting utility, existing and new utilities, required cover depth, and site conditions.

B. Removal of Unsuitable Material:

1. Unstable Material: Where unstable material is encountered in the bottom of the trench, such material shall be removed by over excavation of the trench bottom 4 inches below the depth otherwise required. Contractor is responsible for reviewing the soils report and overall site conditions and, for all costs associated with removal and replacement of unstable materials. For bidding purposes, assume that a minimum of 10% of all excavated bottom utility bearing areas will have unstable material.

2. Rocks and Stones: Stones of 6 inches or greater in any dimension, and any rock or stone of any size/orientation that may disrupt the pipe bedding thickness or pipe supports shall be removed. Rock shall be removed to 4 inches below the bottom of the pipe bearing elevation. Review soils report and Civil drawings notes for special rock conditions that exist.

3. Other: Any wood, refuse, waste, organic material, or other material which would adversely affect pipe support shall be removed. For bidding purposes, assume that 5% of all trench bottom area will have objectionable material as described in this paragraph.

4. Replacement Material: Replace removed unsuitable material with “Utility Foundation Material” as specified under paragraph titled “General Backfill Materials”, or with bedding material specified for the piping to be placed in the trench.

C. Bottom Preparation: Bottoms of trenches shall be accurately graded to provide uniform bearing and support for each section of pipe (or other utility) after bedding placement, and proper slope of piping.

D. Depth: Trench shall be adequate to provide a minimum depth of cover required

to meet connecting utilities; but minimum 1 foot of cover (unless indicated otherwise) ***OR*** as follows:

1. Water Lines: 3.5 feet (or deeper if required by the AHJ); except that branch piping to fixtures within the building footprint shall have a minimum of 1 foot of cover.
2. Other: As required to meet connecting utilities; but minimum 1 foot of cover (unless indicated otherwise).

3.4 BEDDING

A. Pipe Bedding: Provide even bedding placement along the entire length of the pipe to support pipe on a uniformly dense unyielding foundation, without load concentration at joint collars or bells. Bedding shall be installed and compacted prior to installing pipe. Bedding located beneath piping shall have minimum thickness specified in Part 2 of specifications, and be compacted to 90% maximum density. Recesses shall be excavated as necessary at each joint or coupling to eliminate point bearing and to allow uniform pipe support by the bedding material the entire pipe length. Haunching shall be installed in maximum 4 inch lifts, hand placed and carefully worked under the pipe haunches and then compacted to 90% maximum density. All adjustment to line and grade shall be made by scraping away or filling in with bedding material under the body of the pipe and not by blocking or wedging. Bedding disturbed by pipe movement, or by removal of shoring movement of a trench shield or box, shall be reconsolidated prior to backfill.

B. Non-Metallic Duct Bedding: Provide even bedding placement along the entire length of the duct to support duct on a uniformly dense unyielding foundation, without load concentration at joint collars or bells. Bedding shall be installed and compacted prior to installing duct. Bedding located beneath ductwork shall be minimum 2 inches thick (unless noted otherwise), and compacted to 90% maximum density. Recesses shall be excavated as necessary at each joint or coupling to eliminate point bearing and to allow uniform duct support by the bedding material the entire duct length. Haunching shall be installed in maximum 4 inch lifts, hand placed and carefully worked under the duct haunches and then compacted to 90% maximum density. All adjustment to line and grade shall be made by scraping away or filling in with bedding material under the body of the duct and by blocking or wedging. Bedding disturbed by duct movement, or by removal of shoring movement of a trench shield or box, shall be reconsolidated prior to backfill.

C. Other Utility Bedding: Provide even bedding to allow for full support of the installed item on a uniform dense unyielding foundation. Bedding shall be installed and compacted before installing ducts or underground mechanical structures. Bedding shall have minimum of thickness specified in Part 2 of specifications, and be compacted to 95% maximum density.

3.5 BACKFILLING

A. General: Provide backfill of all trenches and underground mechanical structures to grade. Provide adequate initial backfill to allow proper pressure tests, and inspections by AHJ and Architect/Engineer. Leave joints and couplings uncovered as necessary to discover pipe leaks. Do not conceal underground utilities until AHJ and Architect/Engineer have reviewed utilities.

B. Utility Zone Backfilling: Backfill shall be placed in loose layers and compacted to 90 percent maximum density. Backfill shall be placed in horizontal layers no more than 6-inches thick. Backfill shall be brought up simultaneously on each side of the utility to the top of the utility, and onto the specified height above the utility (see Part 2 of specifications). Backfill and compact in a manner to avoid damaging or disturbing the completed utility.

C. Pipe Trench Backfilling: Backfill above the pipe zone backfill shall be accomplished in such a manner that the pipe will not be shifted out of position nor damaged by impact or overloading. Where pipe is outside the building footprint, backfill shall be placed in horizontal layers no more than 6 inches thick and compacted to 95 percent maximum density. Where pipe is inside the building footprint, backfill shall be placed in horizontal layers no more than 6 inches thick and be compacted to 85 percent maximum density.

D. Other Utility Backfill: Backfill shall be accomplished in such a manner that the utility will not be shifted out of position nor damaged by impact or overloading. Backfill shall be placed in horizontal layers no more than 6 inches thick and be compacted to 95 percent maximum density.

END OF SECTION

SECTION 20 05 93 – TESTING, ADJUSTING, BALANCING FOR MECHANICAL

PART 1 GENERAL

1.1 RELATED DOCUMENTS

A. Drawings and general provisions of the Contract, including General and Supplementary Conditions and Division 00 and Division 01 Specification Sections, apply to this Section.

B. Requirements of Section 20 05 00 apply to this Section.

1.2 WORK INCLUDED

A. Air Balancing

B. Hydronic Balancing

C. Plumbing System Water Balancing

D. Report

1.3 SUBMITTALS

A. General: Comply with Section 20 05 00.

B. Company: Submit name of Company proposed to do the balancing and sample balancing forms. Where the Company has not been pre-qualified, and substitutions are allowed after bidding (see Division 00 and 01), submit information regarding firm qualifications.

C. Personnel: Submit list of personnel that will be assigned to the project and their qualifications, and list of past projects.

D. Reports: Preliminary and final balancing reports.

1.4 REFERENCES

A. AABC-NS: Associated Air Balance Council, National Standards for Field Measurements and Instrumentation.

B. ASHRAE: Handbook of Fundamentals.

C. ACGIH-IV: American Conference of Governmental Industrial Hygienists, Industrial Ventilation, A Manual of Recommended Practice.

D. NEEB-PS: National Environmental Balancing Bureau Procedural Standard for Testing, Adjusting and Balancing Environmental Systems.

1.5 GENERAL REQUIREMENTS

A. General: Balancing shall be done by a company which specializes in this type of work and is totally independent and separate from the Company which has installed the systems to be balanced.

B. Balancers Qualifications:

1. General: Work of this Section shall be performed by balancing firms meeting the following and having prior approval from the Engineer:

   a. Professional Affiliation: Firm shall be an Associated Air Balance Council (AABC) member balancer or National Environmental Balancing Bureau (NEBB) certified balancer.

b. Experience: Firm shall have satisfactorily completed the balancing work for at least 5 similar projects in the last 3 years. Similar is defined to mean: within 10% of the same quantity of units and air inlets/outlets, involve same type of systems, be the same type of facility (i.e. school, hospital, etc.). The lead field balancer (i.e. the individual who will be on site directing and participating in the balancing efforts) shall have at least 5 years of experience performing balancing work on similar projects.

c. References: Have five references for similar projects which have been completed in the last three years that will give a good or better performance rating. References shall be engineers, architects, or building owners. As part of the qualification process at least three of these references will be contacted and a rating obtained for the following: timeliness of work (i.e. able to complete work on schedule), cooperative nature of balancer's staff (i.e. ability to work well as a team with other project trades and professionals), overall quality of balancing work, quality of balancing report. Each item will be rated on a scale of 1 to 5 (5 being excellent), with the result averaged, score must be of 4 or better.

2. Pre-Qualified Balancers: As a convenience to the Contractor, the following balancing firms have been pre-qualified. This is not in any way intended to limit competition or prevent other firms from submitting qualifications, but is intended as an aid to Contractors by identifying firms that have been confirmed as meeting the qualification requirements.

   a. Neudorfer Engineers

   b. Hardin and Sons

   c. Test Comm

   d. Advanced Mechanical Services

   e. Testing and Commissioning (TAC) Services

3. Qualification Process: Firms not pre-qualified who desire to perform the balancing work shall submit a substitution request form in accordance with Contract Document requirements (reference Division 00 and 01). In addition to the information required on the substitution request form, submit: Company information, resumes of staff to be assigned, lists of projects, and references (with name of project, staff assigned to project, and contact name and phone number).

B. Balancer Qualifications:

1. Work of this section shall be performed by an Associated Air Balance Council (AABC) member balancer or National Environmental Balancing Bureau (NEBB) certified balancer, subject to review and acceptance of firm's qualifications and experience of staff assigned.

2. Experience: Firm shall have satisfactorily completed the balancing work for at least 5 similar projects in the last 3 years. Similar is defined to mean: within 10% of the same quantity of units and air inlets/outlets, involve same type of systems, be the same type of facility (i.e. school, hospital, etc.). The lead field balancer (i.e. the individual who will be on site directing and participating in the balancing efforts) shall have at least 5 years of experience performing balancing work on similar projects.

C. Balancing Issues: Notify the Engineer in writing of all problems or discrepancies between actual conditions and what design documents show as work proceeds.

D. Engineer's Authority: The Balancer shall be directly responsible to the Engineer and shall perform this work and make system adjustments as directed by the Engineer.

E. Lead Balancer: The Balancer shall assign an individual as “lead balancer” to work in the field to directly supervise the balancing work and field technicians. This lead field balancer shall have at least 5 years of experience performing balancing work on similar projects.

F. Commissioning: See Division 01 and Section 20 08 00 for commissioning efforts required by the Balancing Contractor.

1.6 SCOPE OF AIR BALANCING

A. Balance new AHU for total exhaust and supply airflows indicated. Adjust VFD's and adjust/replace fan sheaves as necessary. Sheaves will be furnished by AHU supplier, and be installed by balancer. Balancer shall return previously used sheaves to AHU supplier.

B. Coordinate with Division 25 contractor for proper high speed and low speed operation of unit fans (see sequence of operation).

C. Measure unit component pressure drops, fan pressure, and fan motor operating characteristics.

D. Measure heating coil performance, heat recovery coil performance, and cooling performance.

E. Check overall unit operation in response to thermostat heating/cooling demands.

PART 2 PRODUCTS

2.1 GENERAL INSTRUMENTATION

A. General: Balancing equipment shall comply with Associated Air Balance Council recommendations for field measurement instrumentation.

B. Calibration: All measuring instruments shall be accurately calibrated and maintained in good working order. Calibration dates and certifications shall be available at Engineer's request.

C. Instruments: Shall be capable of:

1. Air velocity instruments, direct reading in feet per minute with 2% accuracy.
2. Static pressure instruments, direct reading in inches water gauge with 2% accuracy.
3. Tachometers, direct reading in revolutions per minute with 1/2% accuracy; or revolution counter accurate with 2 counts per 1,000.
4. Thermometers, direct reading in degrees Fahrenheit with 1/10 of a degree accuracy.
5. Pressure gauges, direct reading in feet of water or psig with 1/2% accuracy.
6. Water flow instruments, direct reading in feet of water or psig with 1/2% accuracy suitable for readout of balancing valve provided.

D. Potable Water: Instruments used in contact with potable water shall be cleaned and disinfected before use with a chlorine solution.

PART 3 EXECUTION

3.1 GENERAL

A. Workmanship: All measurements and adjustments shall be in accordance with AABC-NS, NEEB-PS, and ACGIH-IV and recognized best balancing procedures. Measurements and adjustments of equipment shall be executed in a manner consistent with the manufacturer's recommendations.

B. Flow Rates:

1. General: All air and water systems shall be completely balanced and adjusted to provide the flow rates indicated (within tolerances indicated in this specification Section), and to produce an even heating and cooling effect and control response and to produce even water circulation.

2. Balancer Determined: Where flow rates have not been indicated the balancer shall determine such flow rates using acceptable practices in accordance with AABC-NS, NEEB-PS, and ASHRAE standards and submit the proposed flow rates to the Engineer for review.

3. Confirmation: Prior to beginning balancing confirm any flow rate changes since design with the submittals and flow rates indicated therein, and with the Engineer to confirm changes made since design. Assume that new flow rates will be issued.

C. Controls: Consult and coordinate with the Control Contractor for the adjustment and setting of all control devices to allow for the balancing work, and for proper system operation and proper flow rates. Set all controls and valves as required to maintain design flow rates and temperatures as shown on the drawings. Make measurements and provide data to the Control Contractor to allow for proper control of items.

D. Comfort Adjustments: Make final adjustments for flow rates in order to optimize each space's comfort, including such considerations as temperature, drafts, noise, pressurization, and air changes. Where variances are made from design values, state reasons in report (e.g., "too noisy", "too drafty," etc.). All such variances are subject to approval by the Architect/Engineer.

E. Deficiency Reports: Submit deficiency reports where the work does not allow balancing to occur or balancing issues develop. Indicate date, system and equipment involved, location, description of deficiency, and related information to allow for diagnosing the problem. Provide suggestions for resolution where possible.

3.2 AIR BALANCING

A. Pre-check of System: Prior to beginning balancing, perform, as a minimum, the following:

1. Verify that clean filters have been installed, that system is free from debris, and that all inlets/outlets are not obstructed.

2. Check all fans and equipment to verify that proper start-up and system

preparation has been done by the installing contractor.

3. Check all door/window and similar building opening status to insure building is ready and proper pressurization can be obtained.
4. Open all dampers to full flow position, check positions and operation of all motorized dampers to allow full system flows.
5. Review controls and sequences of operation.

B. Tolerances: All air flow rates (supply, return, and exhaust) shall be adjusted to within plus 5 percent and minus 5 percent of the values shown in the contract documents, except that relative space-to-space pressure relationships shall always be maintained (e.g., restrooms shall be negative relative to other areas, general offices shall be positive, etc.).

C. Draft and Noise Adjustments: All diffusers, grilles, and registers shall be adjusted to minimize drafts and to eliminate objectionable noise.

D. Filters: Air balancing shall be done with new, clean air filters installed. Adjust air deliveries so that design quantities will be obtained when filters are half dirty. This condition shall be simulated by covering a portion of the filter area.

E. Fan Speeds and Drives:

1. Adjust fan speeds and fan drives (adjustable sheaves) as required to produce design flow rates.
2. Where new sheaves are required, calculate sizing of new sheave and coordinate requirements with the Division 23 Contractor for Division 23 Contractor to furnish the new sheave. Replace existing sheave with new one furnished by the Division 23 Contractor; include bid costs for sheave replacements on all of belt driven fans.
3. Adjust belts for proper tension.

F. Marking: Upon completion of flow readings and adjustments permanently mark the balanced position of all balancing valves by stamping the indicator plate of the valve.

G. Duct Traverse: Rectangular duct traverses shall measure the center of equal areas in the air flow stream, with centers not more than 6 inches apart. Round duct traverses shall measure at least 20 locations, with locations being the centers of equal annular area. Reference ACGIH Industrial Ventilation Manual.

H. One Open Run: Balance each branch run so that there is at least one wide open run; balance branches relative to one another so that at least one branch damper is wide open (except that where unique conditions exist, and the Engineer gives prior approval, one open damper on runs or branches is not required).

I. Data: Data to be measured/recorded and provided in report for all air handling systems and equipment:

1. Floor plans clearly showing and identifying all diffusers, grilles, OA louvers, ducts and all other items where air flow rates were measured.
2. Identify manufacturer, model number, size, and type of all air inlets/outlets.
3. Initial, trial, and final air flow measurements for all diffusers, grilles, OA louvers, ducts, and all other items where air flow rates were measured.

4. Design air flow rates and percentage final air flow rates are of design values.
5. Final damper (or other balance device) final position (as a percentage of full open).
6. The connected voltage and corresponding nameplate full load amps, and the initial and final amperages of all fan motors.
7. Initial and final RPMs of all fans.
8. Static pressures on inlet and outlet of all fans.
9. Fan initial and final CFMs.
10. Outdoor air CFMs (record minimum and maximum values).
11. Entering and leaving air temperatures across coils with coils operating at 100% capacity.
12. Static pressure drop across each filter bank and coil.
13. Final position of any speed controls (as percent of full).
14. In addition to data noted elsewhere, provide the following for all equipment which are part of balanced systems:
    a. Equipment name and number (as used on drawings).
    b. Service.
    c. Equipment manufacturer and model number.
    d. Sheave and belt sizes (where applicable).
    e. Filters sizes and quantities (where applicable).
    f. Motor manufacturer and complete nameplate data.
    g. Design operating conditions.
    h. Actual operating conditions (flows, pressure drops, rpm, etc.).

3.3 WATER BALANCING - PLUMBING

A. Pre-check of System: Prior to beginning balancing, perform, as a minimum, the following:
    1. Verify that all strainers have been cleaned.
    2. Examine fluid in system to verify system condition; balancing is to occur before system disinfection but with system in adequate clean condition.
    3. Check for proper rotation and operation of all pumps.
    4. Verify that expansion tanks are not air bound and properly charged and that system is full of fluid.
    5. Remove air from the circulating system by opening all fixture valves to full flow position allowing system to flow.
    6. Check equipment for proper start-up and system operation.
    7. Review controls and sequences of operation.

B. Tolerances: All water flow rates shall be adjusted to within plus 10 percent and

minus 10 percent of the values shown in the contract documents (or as determined by the balancer where not indicated).

C. Domestic Hot Water Systems: Balance domestic hot water system to provide even flow distribution to allow hot water to reach all fixtures. Use only clean instruments on system and perform balance prior to sterilizing of system. Where flow rates are not indicated, proportion pump water flow rate based on the linear footage of system served.

D. Marking: Upon completion of flow readings and adjustments permanently mark all settings of balancing valves.

E. Data to be measured/recorded and provided in report:

1. Floor plans or schematics showing and identifying all valves, coils, pumps and other items where temperatures, pressure drops, or water flow rates were measured.
2. Identify manufacturer, model number, size and type for all balancing devices.
3. Initial, trial, and final water flow measurements (pressure drops, temperatures, and GPMs) for all items where measurements were made.
4. Design water flow rates, and percentage final water flows are of design values.
5. The connected voltage and corresponding nameplate full load amps, and the initial and final amperages of all pump motors.
6. Pump operating suction and discharge pressures and final total developed head.
7. Pump initial and final GPMs.
8. Final position of all valves (percent open or setting position on valve).
9. Final position of any speed controls (as percent of full).
10. In addition to data noted elsewhere, provide the following for all equipment which are part of balanced systems:
    a. Equipment name and number (as used on drawings).
    b. Service.
    c. Equipment manufacturers and model number.
    d. Equipment capacities.
    e. Motor manufacturer and complete nameplate data.
    f. Design operating conditions.
    g. Actual operating conditions (flows, pressure drops, etc.).

3.4 BALANCING REPORT

A. General: A balancing report shall be submitted as specified herein, documenting all balancing procedures and measurements.

B. Report Organization: The report shall be divided into logical sections consistent with the building or system layout (i.e. by floors, building wings, air handling units, or other convenient way). Tabulate data separately for each system. Describe

balancing method used for each system.

C. Preliminary Report: Two preliminary review copies of the balancing report shall be submitted to the Architect/Engineer when the balancing work is 90% complete (or as near 90% complete as possible due to uncompleted work of other trades). In addition to containing all the information required of the final report, the preliminary report shall contain a list of all the work required of other trades in order to allow the balancing work to be completed. The Architect/Engineer will review the preliminary report and inform the Contractor of any additional items or revisions required for the final report. Preliminary reports may be omitted where the Architect/Engineer grants approval.

D. Final Report: Shall be included in the Operation and Maintenance Manual. Submit reports to Contractor for inclusion in Manuals (or, when manuals have been already sent to Engineer, send report to Engineer who will insert report into Manual). Provide number of reports as required to match quantity of O&M Manuals, but in no case less than five.

E. Format: 8-1/2" x 11" size, neat, clean copies, drawings accordion folded. Report shall be typed, shall have a title page, table of contents, and divider sheets with identification tabs between sections. Information shall be placed in a three hole notebook, with the front cover labeled with the name of the Job, Owner, Architect/Engineer, Balancing Contractor, and Report Date.

F. Electronic Copy: Provide copy of reports in *.pdf format; submit final report with closeout documents per Divisions 00 and 01.

G. General Balancing Information Required:

1. At the beginning of the report, include a summary of problems encountered, deviations from design, remaining problems, recommendations, and comments.
2. List of instruments used in making the measurements and instrument calibration data.
3. Names of personnel performing measurements.
4. Explanation of procedures used in making measurements and balancing each system.
5. List of all correction factors used for all diffusers, grilles, valves, venturi meters, and any other correction factors used.
6. Areas where difficulties were encountered in obtaining design flow rates, or where unstable operating conditions may exist.
7. Note any parts of the system where objectionable drafts or noises may be present and efforts made to eliminate same and why they may still be present.
8. Note where variances from design values occur; explain why.
9. All specified measurements, balancing data, any additional recorded data, and observations.

END OF SECTION

SECTION 20 07 00 – MECHANICAL INSULATION

PART 1 GENERAL

1.1 RELATED DOCUMENTS

A. Drawings and general provisions of the Contract, including General and Supplementary Conditions and Division 00 and Division 01 Specification Sections, apply to this Section.

B. Requirements of Section 20 05 00 apply to this Section.

1.2 WORK INCLUDED

A. Duct Insulation

B. Pipe Insulation

C. Equipment and Specialties Insulation

D. Acoustical Wrap

E. Fire Protection Duct Wrap

1.3 DEFINITIONS

A. R: Thermal resistance of insulation, in units of hr-sf-deg F/Btu.

B. Rainleader Piping: Any piping or conduit that is used to carry rain water, including overflow drain piping, that is located within the building or enclosed by any building construction.

C. Subject to Damage: Items installed exposed less than 8 feet above the walking surface (i.e. floor, platform, roof, grade, etc.) adjacent to the item.

D. Cold Surfaces: Surfaces that will have operating temperatures below the temperature of the surrounding air by at least 5 deg F or more; includes chilled water piping, cooling condensate piping, air conditioning ductwork, outdoor air ductwork, and similar systems. Surfaces shall be considered a cold surface unless specifically indicated otherwise.

1.4 QUALITY ASSURANCE

A. All insulation and materials shall have a fire hazard rating not to exceed 25 for flame spread and 50 for smoke development, as tested by ASTM E 84, NFPA 255, and UL 723.

1.5 SUBMITTALS

A. General: Comply with Section 20 05 00.

B. Product Data: Provide product data on all insulation materials to be used. Indicate thicknesses to be used.

1.6 GENERAL REQUIREMENTS

A. Code Compliance: Contractor shall insulate all systems with the materials and thicknesses as required by code, but in no case shall the insulation be less than that specified herein. In some cases the specified insulation exceeds code, and shall be provided as specified. Not all systems requiring insulation by code are specified, but shall be provided with insulation where required by code.

B. Insulation at Hangers: Insulation shall be continuous through hangers on all insulated systems (except ductwork). Inserts at hangers are specified in Section 20 05 29 and are considered as part of the hanger and support system. Inserts are required to be installed at the time of pipe installation and are intended to be installed by the Contractor installing the pipe hangers/supports. See Section 20 05 29.

1.7 REFERENCES

A. ASTM A 653: Standard Specification for Steel Sheet, Zinc-Coated (Galvanized) or Zinc-Iron Alloy-Coated (Galvannealed) by the Hot Dip Process.

B. ASTM B 209: Standard Specification for Aluminum and Aluminum-Alloy Sheet and Plate.

C. ASTM C 411: Standard Test method for Hot-Surface Performance of High Temperature Thermal Insulation.

D. ASTM C 547: Standard Specification for Mineral Fiber Pipe Insulation.

E. ASTM C 1136: Standard Specifications for Flexible, Low Permeance Vapor Retarders for Thermal Insulation.

F. ASTM C 1290: Standard Specification For Flexible Fibrous Glass Blanket Insulation Used to Externally Insulate HVAC Ducts.

G. ASTM E 84: Standard Test Method for Surface Burning Characteristics of Building Materials.

H. NCIIS: National Commercial & Industrial Insulation Standards, published by Midwest Insulation Contractors Association, 5th Edition.

I. NFPA 255: Standard Method of Test of Surface Burning Characteristics of Building Materials.

J. UL 723: Tests for Surface Burning of Building Materials.

PART 2 PRODUCTS

2.1 ACCEPTABLE MANUFACTURERS

A. Products shall comply with Section 20 05 00, Paragraph Part 2.1, Acceptable Manufacturers.

B. Insulation: Johns Manville, Armacell, Owens-Corning, Knauf, Rubatex, Aeroflex, Pittsburgh Corning, GLT, Halstead, Gilsulate.

C. Accessories: Johns Manville, Armacell, Owens-Corning, Knauf, Rubatex, Aeroflex, Pittsburgh Corning, GLT, Halstead, Duro Dyne, Gustin Bacon, Childers, RPR, Tee Cee, Lewco Specialty Products, JPS, Buckaroos.

D. Acoustical Wrap: Kinetics Noise Control.

E. Fire Protection Duct Wrap: 3M.

2.2 DUCT INSULATION

A. Flexible Glass Fiber:

1. Type: Flexible blanket type, constructed of inorganic glass fibers bonded by a

thermosetting resin, complying with ASTM C 1290, Type III. Johns Manville "Microlite" (or approved).

2. Jacket: FSK type, vapor proof, consisting of an aluminum foil cover reinforced with glass fiber mesh, and laminated to kraft. Water vapor permeance shall not exceed 0.05 perms. Provide with joint sealing tape, minimum 2 inches wide, constructed of jacket material with adhesive to seal all joints.
3. Thermal Conductivity: Shall not exceed 0.27 Btu-in/hr-sq ft-deg F at 75 deg F.
4. Operating Limits: 40 degrees F to 250 deg F.

B. Rigid Glass Fiber:

1. Type: Rigid board type, constructed of inorganic glass fibers bonded by a thermosetting resin, complying with ASTM C 612, Type 1A and 1B. Johns Manville "800 series Spin-Glas".
2. Jacket: FSK type, vapor proof, consisting of an aluminum foil cover reinforced with glass fiber mesh, and laminated to kraft. Water vapor permeance shall not exceed 0.05 perms. Provide with joint sealing tape constructed of jacket material with adhesive to seal all joints.
3. Thermal Conductivity: Shall not exceed 0.23 Btu-in/hr-sq ft-deg F at 75 deg F.
4. Operating Temperature Limits: 40 deg F to 450 deg F.

C. Corner Angles: 0.016 inch thick aluminum, alloy 3003 or 5005, with factory applied Kraft backing, complying with ASTM B 209.

D. Weather Barrier Mastic: Water based vinyl-acrylic mastic for outdoor weather protection of thermal insulation; fire resistant, UV deterioration resistant. Childers "Vi-cryl" (or approved equal).

E. Glass Fiber Mesh: Open weave glass fiber reinforcing mesh for use with insulation coatings to bridge gaps and add strength to the coating. Minimum 5 strands x 5 strands per square inch. Non-combustible Childers "Chil-Glas" (or approved equal).

F. Metal Jacket:

1. Steel: Minimum 24 gauge galvanized steel complying with ASTM A 653. Provide with longitudinal slip joints and 2-inch laps.
2. Aluminum: Minimum 0.020-inch thick aluminum, alloy 3003 or 5005, complying with ASTM B 209. Provide with longitudinal slip joints and 2-inch laps.
3. Metal Jacket: Minimum 0.032-inch thick gauge galvanized steel complying with ASTM A 653; or fabricated of type 304 stainless steel; smooth surface. Provide with longitudinal slip joints and 2-inch laps. Jacketing at fittings shall be of same material, factory formed to suit fitting and insulation.

G. PVC Jacket: UV resistant polyvinyl chloride covering, minimum 20 mil thick, with joints secured and sealed with "Perma-Weld" Adhesive. Johns Manville "Zeston 300" (or approved).

H. Duct Insulation Types:

1. Aboveground-Inside Buildings:
   a. Exposed-Subject to Damage:
      1) Rectangular Ducts: Rigid glass fiber with metal corner angles.
      2) Round/Oval Ducts: Flexible glass fiber with PVC or metal jacket.
   b. Exposed - Not Subject to Damage: Flexible glass fiber.
   c. Concealed: Flexible glass fiber.
2. Aboveground-Outside Buildings:
   a. Rectangular Duct: Rigid glass fiber with weather barrier mastic coating and steel or aluminum metal jacket.
   b. Round/Oval Ducts: Flexible glass fiber with weather barrier mastic coating and steel or aluminum metal jacket.

I. Duct Insulation Thickness:

1. General: Provide insulation densities and thicknesses to achieve the following R values. R values are for the insulation only, in their installed thickness, considering installed duct wrap stretch and in accordance with code.
2. Lining: Where ducts have internal lining, the insulating properties of the lining may be credited toward meeting the required insulation R value; use R-3.65 per inch of installed liner.
3. Supply Air Ductwork:
   a. Inside Building and Within Building's Thermal Envelope: R-3.3 (except where ran exposed in conditioned spaces, no insulation is required).
   b. Inside Building But Not Within Building's Thermal Envelope: R-7.3.
   c. Outside of Building: R-8.
   d. Underground: R-8.
4. Return Air Ductwork:
   a. Inside Building and Within Building's Thermal Envelope: No insulation required; except where duct contains air that may vary by 10 deg F or more from the space the duct passes through, R-3.3 insulation shall be provided.
   b. Inside Building But Not Within Building's Thermal Envelope: R-7.3.
   c. Outside of Building: R-8.
5. Outside Air Ductwork: Shall be insulated same as required for the building envelope; except where allowed by code to be insulated less than the building envelope, shall be R-8; insulation is not required where duct run outside the building.
6. Exhaust, Relief, and Special Ductwork:
   a. Inside Building and Within Building's Thermal Envelope:
      1) Temperature of Air in Duct within 10 Deg F of Temperature of Air in

Spaces Duct Passes Through: No insulation required except ductwork from the system's backdraft damper (or motorized damper) to outside the building shall be insulated same as required for the building envelope.

2) Temperature of Air in Duct more than 10 Deg F Different from temperature of Air in Spaces Duct Passes Through: R-8.3; except ductwork from the system's backdraft damper (or motorized damper) to outside the building shall be insulated same as required for the building envelope (but no less than R-8.3).

b. Inside Building But Not Within Building's Thermal Envelope: R-8.3.

c. Outside of Building: Ducts carrying air where condensation can occur (i.e. air from dryers, locker rooms, kitchens, hoods, process loads, etc.) R-8.3; other ducts no insulation is required.

2.3 PIPE INSULATION

A. Glass Fiber:

1. Type: Rigid molded type, constructed of glass fibers bonded by a thermosetting resin, complying with ASTM C 547 Type I. Insulation factory molded to match pipe size applied to. Johns Manville "Micro-Lok" (or approved).

2. Jacket: ASJ type, vapor proof, consisting of a white kraft paper cover reinforced with glass fiber and bonded to aluminum foil, with longitudinal self sealing closure system. Provide with butt strips constructed of jacket material with adhesive to seal all joints. Water vapor permeance shall not exceed 0.02 perms.

3. Thermal Conductivity: Shall not exceed 0.24 Btu-in/ hr-sq ft-deg F at 75 deg F.

4. Operating Temperatures: 0 deg F to 850 deg F.

B. Elastomeric Insulation:

1. Type: Flexible cellular elastomeric insulation, factory formed to match pipe sizes applied to, complying with ASTM C 534, Type 1. Armacell "AP/Armaflex SS" (or approved). ***For high temp use instead*** Aeroflex "Aerocell" (or approved).

2. Thermal Conductivity: Shall not exceed 0.27 Btu-in/ hr-sq ft-deg F at 75 deg F.

3. Water Vapor Transmission: Water vapor permeance shall not exceed 0.08 perms.

4. Operating Temperatures: -200 deg F to 220 deg F; shall be able to withstand 250 deg F temperatures for 96 hours per ASTM C 411 without damage or deformation.

5. Weather Protection: Where installed outdoors provide with metal jacketing to protect from UV and weather exposure.

C. Cellular Glass Insulation:

1. Type: Rigid closed-cell glass insulation, factory formed to match pipe size

applied to. Pittsburgh Corning “Foamglas” (or approved).

2. Jacket: Field applied heat sealable water-proof jacketing, consisting of 3 layers of a polyer modified bituminous compound separated by glass fiber reinforcement and aluminum foil. Water vapor permeance shall not exceed 0.00 perms. Pittsburgh Corning “Pittwrap” (or approved).
3. Thermal Conductivity: Shall not exceed 0.29 Btu-in/ hr-sq ft-deg F at 75 deg F.
4. Operating Temperatures: -450 deg F to 900 deg F.
5. Compressive Strength: 90 psi.

D. Pipe Fittings: Shall be covered using any one of the following methods of the Contractor's choice:

1. Prefabricated segments of pipe insulation of same materials and thickness as the adjoining pipe insulation, formed to match pipe fitting.
2. Pre-cut fiberglass insulation and pre-molded high impact, gloss white, UV resistant, minimum 20 mil thick, PVC covers suitable for the pipe size and insulation thickness application, PVC cover shall be Johns Manville "Zeston 2000 PVC" (or approved).
3. Insulating plastic cement brought up the full height of the adjacent covering.
4. Except, where colored PVC jacketing is applied to piping, fittings shall use PVC covers of the same thickness and color as the PVC jacketing specified for the piping.

E. Metal Jacket: Aluminum roll jacketing, factory formed to match pipe size and insulation application, with smooth surface, manufactured from 3003 or 5005 aluminum alloy, H-14 temper, conforming to ASTM B 209. Shall be minimum 0.020 inches thick, with an integrally bonded interior 1 mil thick heat bonded polyethylene moisture barrier over the entire surface in contact with the insulation. Fitting covers shall be fabricated of same material as pipe runs, factory formed to match fitting.

F. PVC Jacket: Pre-molded 30 mil thick PVC jacket; size and shape to match piping and fittings applied to. Johns Manville “Zeston Series 2000" (or approved). Provide in white color.

G. Pipe Insulation Types:

1. Aboveground-Inside Building:
   a. Hydronic Systems: Glass fiber.
   b. Cooling Coil Condensate: Glass fiber or elastomeric.
   c. Refrigerant Piping: Elastomeric.
   d. Other Systems: Glass fiber.
2. Aboveground-Outside Building: Same as specified above, with metal jacket.
3. Underground:
   a. Refrigerant Piping: Cellular glass.

b. Hydronic and Steam/Condensate Systems: Trench insulation or cellular glass.

4. Metal and PVC Jacketing: See “Part 3 - Execution”.

H. Pipe Insulation Thickness:

1. General: Provide minimum piping insulation thickness indicated, in inches.

INSULATION THICKNESS (INCHES)

Nominal Pipe Diameter (Inches)					
Fluid Design Operating Range, deg F	<1	1< to 1-1/2	>1-1/2 to <4	4 to <8	≥8
Above 350	4.5	5.0	5.0	5.0	5.0
251 - 350	3.0	4.0	4.5	4.5	4.5
201 - 250	2.5	2.5	2.5	3.0	3.0
141 - 200	1.5	1.5	2.0	2.0	2.0
61 - 140	1.0	1.0	1.5	1.5	1.5
40 - 60	0.5	0.5	1.0	1.0	1.0
Below 40	0.5	1.0	1.0	1.0	1.5

2. Varying Temperatures: Where a system operates over temperature ranges calling for different insulation thicknesses, the thicker insulation requirements shall be met.

3. Condensate: Cooling system condensate piping (i.e. from a cooling coil) shall be considered to operate at 50 deg F.

4. Rainleader: Rainleader piping shall be considered to operate at 55 deg F.

5. Condenser Water: Condenser water piping does not require insulation (unless noted otherwise); except where ran outside the building, provide 1 inch thick insulation.

6. Outdoor Piping: Piping exposed to outside air or, located outside the building/thermal envelope, shall have insulation thickness increased by 0.5 inch from that indicated above.

7. Cold Water: Cold water piping shall be considered to operate at 56 deg F (unless noted otherwise).

2.4 EQUIPMENT AND SPECIALTIES INSULATION

A. P-traps and HW/CW Lines on ADA Compliant Sinks and Lavatories: Prefabricated insulation specially designed for p-trap application, with white elastomeric insulation, white high gloss pvc cover, and velcro closure. Provide section for insulating HW stop and CW stop and associated piping of same material. McGuire “Pro-Wrap” (or approved).

B. Flexible Glass Fiber:

1. Type: Flexible blanket insulation, constructed of inorganic glass fibers bonded by a thermosetting resin, complying with ASTM C 553, Type III. Johns Manville “812 Spin-Glas” (or approved).

2. Jacket: FSK type, vapor proof, consisting of an aluminum foil cover

reinforced with glass fiber mesh, and laminated to kraft. Water vapor permeance shall not exceed 0.05 perms. Provide with joint sealing tape constructed of jacket material with adhesive to seal all joints.

3. Thermal Conductivity: Shall not exceed 0.24 Btu-in/ hr-sq ft-deg F at 75 deg F.
4. Operating Temperature Limits: 40 deg F to 450 deg F.
5. Density: 1.5 lb/cu ft.

C. Semi-Rigid Glass Fiber:

1. Type: Semi-rigid board insulation, constructed of inorganic glass fibers bonded by a thermosetting resin.
2. Jacket: ASJ type, vapor proof, consisting of a white kraft paper cover reinforced with glass fiber and bonded to aluminum foil, with longitudinal self sealing closure system. Provide with butt strips constructed of jacket material with adhesive to seal all joints. Water vapor permeance shall not exceed 0.02 perms.
3. Thermal Conductivity: Shall not exceed 0.29 Btu-in/hr-sq ft-deg F at 75 deg F.
4. Operating Temperature Limits: 0 deg F to 650 deg F.

D. Elastomeric:

1. Type: Flexible cellular elastomeric insulation, complying with ASTM C 534, Type II.
2. Thermal Conductivity: Shall not exceed 0.30 Btu-in/ hr-sq ft-deg F at 75 deg F.
3. Water Vapor Transmission: Water vapor permeance shall not exceed 0.08 perms.
4. Operating Temperatures: -200 deg F to 220 deg F; shall be able to withstand 250 deg F temperatures for 96 hours per ASTM C 411 with damage or deformation.
5. Weather Protection: Where installed outdoors provide with metal jacketing to protect from UV and weather exposure.

E. Removable Insulation Blankets:

1. Type: Flexible blanket insulation pads, for insulating valves, unions, strainers and similar items. Constructed of exterior fabric enclosure sewn around interior insulation, held in position with a closure system that allows for removal of the blanket. Contractor or factory fabricated.
2. Enclosure:
   a. Hot Applications: Glass fiber cloth, 1/8-inch thick, noncombustible, service temperature up to 1200 degrees F. JPS Glass Fabrics “Glastex 2025” (or approved).
   b. Cold Application: Silicone impregnated glass fiber cloth; chemical and oil resistant; water proof; flame and abrasion resistant; minimum 20 ounce/square yard weight. Lewco Specialty Products 3000 SA-2 (or approved).

3. Insulation: Thermal insulating wool, 1-inch thick, complying with ASTM C 553. Maximum thermal conductivity 0.22 Btu-in/ hr-sq ft-deg F at 75 degrees F. Provide in layers to give equivalent R value to the adjacent insulated piping. Owens Corning “Fiberglas Brand TIW, Type II”.

4. Closure System: Velcro, zipper or steel lacing. Steel lacing anchors shall have spindles and self-locking washers, fabricated of minimum 14 gauge stainless steel, with stainless steel wire ties. AGM Industries “Series NLA” (or approved). Closure shall be configured to allow for complete coverage and closure of the insulation around the object being insulated. Closure for cold surfaces (surfaces that operate below ambient air temperature) shall provide a sealed vapor barrier so that no surfaces are exposed to ambient air and so that no condensation can occur; overlap enclosure ends (or any vapor barrier penetrations, as caused by suing steel lacing anchors) with an added vapor barrier cover, minimum 2-inches past the vapor barrier penetration; with Velcro (or equivalent) closure.

F. Corner Angles: 0.016 inch thick aluminum, alloy 3003 or 5005, with factory applied Kraft backing, complying with ASTM B 209.

G. Metal Jacket:

1. Steel: Minimum 24 gauge galvanized steel complying with ASTM A 653. Provide with longitudinal slip joints and 2-inch laps.

2. Aluminum: Minimum 0.020-inch thick aluminum, alloy 3003 or 5005, complying with ASTM B 209. Provide with longitudinal slip joints and 2-inch laps.

H. Equipment and Specialties Insulation Types and Thickness:

1. Unless a specific type of insulation is specified or noted, any of the insulation materials specified in this specification section may be used provided such application is in conformance with NCIIS.

2. Insulation Thickness: Insulation thickness shall be the same as that specified for the piping or ductwork connected to the item, or as specified for the system the item is installed in (unless noted otherwise). Insulation thickness shall in no case be less than 1 inch thick.

3. Valves:

a. 2 Inches and Smaller: Insulate with same material as piping system.

b. 2-1/2 Inches and Larger: Removable blanket insulation.

4. Control Valves: Removable blanket insulation.

5. All equipment and specialties where access is required shall have removable insulation blankets; other removable insulation materials per NCIIS may be used where pre-approved by the Engineer. Items requiring such removable insulation include, but are not limited to, the following:

a. Strainers.

b. Pumps.

c. Balancing valves.

d. Pressure/temperature/flow measuring devices.

6. Breeching: One layer of 2-inch thick high temperature flexible glass fiber insulation, with an exterior wrap of 1-inch thick flexible glass fiber insulation.

2.5 ACCESSORIES

A. Adhesive, Caulks, Mastics, and Coatings: As recommended by insulation material manufacturer and suited for the application.

B. Bands: 1/2-inch wide, of stainless steel, galvanized steel, or aluminum construction, to match with materials used with.

C. Weld-Attached Anchor Pins and Washers: Copper-coated steel pin for capacitor-discharge welding and galvanized speed washer. Pin length shall be as required for insulation thickness used with. Welded pin holding capacity 100 lb, for direct pull perpendicular to the attached surface. Style and type to suit application.

D. Adhesive-Attached Anchor Pins and Speed Washers: Galvanized steel plate, pin, and washer manufactured for attachment to duct and plenum with adhesive. Pin length sufficient for insulation thickness used with. Adhesive as recommended by the anchor pin manufacturer as appropriate for surface temperatures and materials used with, and to achieve a holding capacity of 100 lb for direct pull perpendicular to the adhered surface. Style and type to suit application.

2.6 ACOUSTICAL WRAP

A. Type: Composite material having an outer foil faced sound barrier wrap with an internal sound decoupling insulation. Kinetics Noise Control KNM-100ALQ (or equal).

B. Construction: Outer sound barrier material shall be flexible 1.10 inch thick, 1 lb/sf (minimum) barium sulphate loaded limp vinyl sheet, bonded to an outside layer of aluminum foil. Interior sound decoupling insulation shall be 1-inch think fiber glass batting quilted to a non woven porous scrim-coated glass cloth in a 4-inch diamond stitch pattern. Material shall be suitable for temperatures from 40 to 200 deg F.

C. Acoustic Rating: STC (sound transmission coefficient) 28 (or better).

D. Vibration Damping Material: Kinetics Noise Control KDD or KDC-E-162.

2.7 FIRE PROTECTION DUCT WRAP

A. Type: Encapsulated fireproof blanket for use as a zero-clearance to combustible construction and as an alternative to rated shaft enclosure for kitchen grease exhaust ducts and fire rated air ducts. 3M Fire Barrier Duct Wrap 615+ (or approved equal).

B. Materials: Inorganic fiber blanket encapsulated with aluminum foil scrim. Melting point shall be no less than 3200 deg F. Material shall be at least 1-1/2 inches thick, and be installed in layers and thickness necessary to provide the required fir resistance rating. Material shall be flexible, easily contoured, to allow wrapping around ductwork.

C. Listing: Shall be listed and labeled for use as a field applied grease duct enclosure.

PART 3 EXECUTION

3.1 GENERAL

A. Pre-Insulation Review: No covering materials shall be applied until systems to be covered have had all tests satisfactorily completed, have had all required inspections, and have been satisfactorily reviewed by the Architect-Engineer. All systems shall be examined by the Contractor to confirm cleanliness and other conditions are appropriate to allow for insulation installation.

B. Insulation Work Review: No insulated items shall be concealed in the building structure or buried until the insulation work has been satisfactorily reviewed by the Architect-Engineer, and has had all required inspections.

C. Standards: Materials shall be installed in accordance with manufacturer's written instructions, NCIIS, and shall comply with materials and methods specified herein. The more stringent requirements govern.

D. Joints/Seams: Joints shall be staggered on multi layer insulation. Locate seams and joints in least visible location.

E. Insulation Protection: Insulation shall be kept clean and dry and shall be protected from dirt, damage, and moisture. Insulation that becomes dirty, damaged, or wet and cannot be restored to like new condition will be rejected, and shall immediately be removed from the jobsite.

F. Insulation Interruptions: Insulation shall be neatly finished at all supports, protrusions and interruptions. Provide adhesive and tape seal to maintain vapor barrier integrity.

G. Equipment and Floor Protection: Cover existing equipment and finished floors to protect such items from insulation fiber and dust. Keep all such existing areas in a "broom clean" condition at the end of each day. Take precautions in these areas to prevent glass fiber and insulation dust from entering ventilation systems or areas adjacent to the work.

H. Glass Fiber Insulation - General:

1. Finish all insulation ends with joint sealing tape or vapor barrier mastic, no raw edges allowed.
2. Joints: Tightly butt adjacent insulation sections together without any voids. Provide overlap of jacket material over all joints.

I. Items To Be Insulated: Provide insulation on all ductwork, all piping, all items installed in these duct and piping systems, all air and liquid energy conveying systems and components, all air and liquid energy storage, all equipment, and all energy consuming devices, except where such insulation has been specifically excluded.

J. Items Excluded From Being Insulated:

1. Sanitary sewer drain lines (except traps at handicap accessible fixtures).
2. Double wall flues.
3. Factory pre-insulated underground piping.
4. Stops and risers at plumbing fixtures (except at handicap accessible fixtures).
5. Factory insulated water heaters (except for base on electric water heaters).

6. Factory insulated tanks.
7. Electric motors.
8. Fans.
9. Factory insulated or factory lined HVAC, AHU, and AC units.
10. Pumps handling hot water.
11. Condensate receivers.
12. Relief Valves and associated drain piping.
13. Hose bibbs (except where used as drains hot water systems).
14. Fuel piping.
15. Heating system expansion tanks.
16. Water meter.
17. Underground cold water piping and associated underground items.

3.2 DUCT INSULATION INSTALLATION

A. Types and Thickness: Insulate all ducts with insulation type and thickness (to provide the required R value) as specified in “Part 2 - Products”.

B. General: Insulation shall be firmly butted at all joints. All longitudinal seams for flexible insulation shall overlap a minimum of 2 inches. All joints and seams shall be finished with appropriate joint sealing tape. Installation shall provide a continuous sealed vapor barrier over all surfaces; seal all jacket penetrations with vapor barrier mastic or vapor barrier jacket tape.

C. Attachment: For rectangular ducts over 24 inches wide, duct insulation shall be additionally secured to the bottom of the ductwork with mechanical fasteners on 18 inch centers to reduce sagging. Washers shall be applied without compressing the insulation. Protruding ends or fasteners shall be cut off flush after washers are installed. All seams, joints, penetrations, and damage to the facing shall be sealed with joint sealing tape or vapor retardant mastic or appropriate joint sealing tape.

D. Outdoors: Outdoor insulated ductwork shall receive rigid insulation, weather barrier mastic coating (with mesh) and metal jacketing. Ductwork shall have jacketing lapped, secured, and sealed to provide a completely weatherproof enclosure; sealed watertight. See Section 23 33 00 for standing seam metal roofing to be applied over the tops of ducts. See drawings for additional requirements.

3.3 PIPE INSULATION INSTALLATION

A. Types and Thickness: Insulate all piping with insulation type and thickness as specified in “Part 2 - Products”. All piping shall be insulated except where specifically excluded.

B. General: All ends shall be firmly butted together and secured with joint sealing tape. All jacket laps and joint sealing tape shall be secured with outward clinch staples at 4-inch spacing, or by use of a suitable adhesive. Installation shall provide a continuous sealed vapor barrier over all surfaces; seal all jacket penetrations with vapor barrier mastic or vapor barrier jacket tape.

C. Elastomeric Pipe Insulation: Install with seams and joints sealed with rubberized contact adhesive. Insulation with pre-applied adhesive is not permitted. A brush coating of adhesive shall be applied to both butt ends to be joined and to both split surfaces to be sealed. Adhesive shall be allowed to set until dry to touch but tacky under slight pressure before joining the surfaces. Insulation seals at seams and joints shall not be capable of being pulled apart one hour after application. Provide added tape wrap around insulation to ensure seam and joint closure. Insulation that can be pulled apart one hour (or more) after adhesive installation shall be replaced. Provide metal jacketing over outdoor exposed insulation.

D. Pipe Hangers: Provide insulation tight up to pre-insulated pipe supports at pipe hangers, seal all joints with joint sealing tape. Pre-insulated pipe supports are specified in Section 20 05 29.

E. Pipe Sleeves: Run insulation continuous full size through sleeve. Coordinate work with fire seals and confirm fire seal system is approved for use with insulated pipes; see Section 20 05 30.

F. Metal Jacketing:

1. Applications: Provide metal jacket over piping insulation for the following:

   a. Exposed rain leaders in occupied areas; from finished floor and up 8 feet.

   b. Outdoor exposed piping.

2. Outdoor Installation: Where installed on outdoor piping locate seams on bottom side of horizontal piping. Seal all jacket seams to provide a completely weatherproof enclosure; water tight.

3.4 EQUIPMENT AND SPECIALTIES INSTALLATION

A. Types and Thickness: All equipment and items installed in insulated duct and piping systems shall be insulated except where specifically noted not to be; reference paragraph 3.1. Insulation type and thickness shall be as specified in “Part 2 - Products”.

B. General: Apply insulation as close as possible to equipment by grooving, scoring, and beveling as necessary. As required, secure insulation to equipment with studs, pins, clips, adhesive, wires or bands. Fill joints, cracks, seams, and depressions with bedding compound to form smooth surface. Comply with NCIIS.

C. Removable: All equipment and specialties where access is required for maintenance, repair, service, or cleaning shall have insulation installed so that it can be easily removed and reinstalled without being damaged and without requiring new insulation. Removable insulation shall completely cover the item being insulated with an overlap over adjacent insulation to cover all joints. Insulation on cold surfaces shall provide a sealed vapor barrier so that no surfaces are exposed to ambient air and so that no condensation can occur; overlap enclosure ends minimum 2-inches.

D. ADA Compliant Lavatories and Sinks: Insulate P-trap and HW/CW supplies below lavatory and sink where exposed.

E. Nameplates: Do not insulate over nameplates or ASME stamps; bevel and seal

insulation around.

F. Jacketing: Provide all equipment insulation with vapor retardant jackets.

3.5 ACOUSTIC WRAP

A. General: Install in accordance with manufacturers written instructions and NCIIS. Overlap all interior sound insulation joints with a minimum 2-inch overlap of the exterior sound barrier. Acoustical insulation shall not be compressed. Where installed over equipment or items requiring access, provide acoustic wrap in sections and in a manner that facilitates future removal and re-installation.

B. Light Gauge Duct: Where the ductwork to which the wrap is to be applied is less than 20 gauge, apply vibration damping material on outside of duct before applying acoustic wrap.

C. Insulated Items: Where installed on ducts or items that require thermal insulation, install thermal insulation over acoustic wrap.

D. Locations: Provide acoustic wrap on the first 10 feet of supply (or discharge) duct off all air handling units, fans, and at locations noted on plans.

3.6 FIRE PROTECTION DUCT WRAP

A. General: Install in accordance with manufacturers written instructions and UL listing to provide duct protection equivalent to a 2 hour rated shift enclosure.

B. Locations: Provide fire protection duct wrap at locations noted on plans and on all ducts serving Type I hoods.

END OF SECTION

SECTION 20 08 00 – COMMISSIONING OF MECHANICAL SYSTEMS

PART 1 GENERAL

1.1 RELATED DOCUMENTS

A. Drawings and general provisions of the Contract, including General and Supplementary Conditions and Division 00 and Division 01 Specification Sections, apply to this Section.

B. Requirements of Section 20 05 00 apply to this Section.

1.2 WORK INCLUDED

A. Commissioning of Mechanical Systems

B. Documentation

1.3 SUBMITTALS

A. General: Comply with Section 20 05 00.

B. Qualifications: Submit qualifications of the firm proposed to perform the commissioning work and for the individuals that will be assigned.

C. Commissioning Data:

1. Commissioning plan.
2. Commissioning preliminary report.
3. Commissioning final report.

1.4 GENERAL REQUIREMENTS

A. General: Commissioning shall be done by a Company which specializes in this work and independent and separate from the Companies installing the systems to be commissioned.

B. Company Experience: The Company providing the commissioning work shall be experienced in commissioning HVAC control systems, and have commissioned at least five similar projects in the last three years.

C. Individual Experience: The individuals performing the commissioning work shall have at least five years experience in commissioning, with the individual in the field in charge or the work having commissioned at least five similar projects in the last three years.

D. Deferred Test: Tests may be deferred to allow for proper climatic or other conditions.

1.5 REFERENCES

A. AABC: Associated Air Balance Council.

B. AEE: Association of Energy Engineers.

C. BCA: Building Commissioning Association.

D. NEBB: National Environmental Balancing Bureau.

PART 2 PRODUCTS

2.1 NOT APPLICABLE

PART 3 EXECUTION

3.1 GENERAL

A. General: Provide commissioning as required by code and as specified herein.

B. Building Occupancy: Building or portions thereof, required by code to be commissioned, shall not be considered ready for occupancy until such time that the Engineer and building official determine that the preliminary commissioning report required by this Section has been completed.

3.2 HVAC SYSTEMS

A. General: HVAC equipment and HVAC control systems shall be tested to ensure that control devices, components, equipment and systems are calibrated, adjusted and operate in accordance with approved plans and specifications.

B. Sequences: Sequences of operation shall be functionally tested to ensure they operate in accordance with approved plans and specifications.

C. Conditions: Testing shall affirm operation during actual or simulated winter and summer design conditions and during full outside air conditions.

D. HVAC Equipment: Equipment functional performance testing shall demonstrate the installation and operation of components, systems, and system-to-system interfacing relationships in accordance with approved plans and specifications such that operation, function, and maintenance serviceability for each of the commissioned systems is confirmed. Testing shall include all modes and sequence of operation, including under full-load, part-load and the following emergency conditions:

1. All modes as described in the sequence of operation.
2. Redundant or automatic back-up mode.
3. Performance of alarms.
4. Mode of operation upon a loss of power and restoration of power.

E. HVAC Controls: HVAC control systems shall be tested to document that control devices, components, equipment, and systems are calibrated, adjusted, and operate in accordance with approved plans and specifications. Sequence of operation shall be functionally tested to document they operate in accordance with approved plans and specifications.

F. Economizers: Air economizers shall undergo a functional test to determine that they operate in accordance with manufacturer's specifications.

3.3 DOCUMENTATION

A. Format:

1. Hard Copy: Provide reports in 8-1/2 x 11 format, in 3 ring notebooks, with labeled cover and spine, clean legible, and logically organized with table of contents, divider tabs, and names of companies involved in the project, commissioning company name, commissioning personnel, and contact information. Provide 3 copies per Divisions 00 and 01.

2. Electronic: Provide copy in *.pdf format; submit with closeout documents per Divisions 00 and 01.

B. Test Plan: Prepare a written commissioning test plan and submit for approval prior to beginning commissioning work. Test plan to include:

1. Equipment and systems to be tested.
2. Roles and responsibilities of individuals performing the commissioning and of others involved in the project.
3. Functional test procedures and forms.
4. Conditions under which the test shall be performed (for example, winter design conditions, full outside air, etc.).
5. Expected systems' response or acceptance criteria for each procedure.
6. Time schedule for performance of the work; including any deferred tests.
7. Forms as required by the WSEC or AHJ.

C. Preliminary Commissioning Report:

1. General: A preliminary report shall be issued to identify issues preventing the commissioning work from being completed. If all commissioning work can be fully completed and the final report completed, a preliminary report is not required.
2. Report: Compile all system and commissioning data; including all reviews, inspections, test procedures, and tests. Report shall include field notes of commissioning activities, equipment and system data, test procedures, tests performed, actual results as compared to expected (or specified) results, WSEC and any AHJ required commissioning forms (completed to the extent possible).
3. Items to Complete: The preliminary report shall identify items needed in order to complete the commissioning, including:
   a. Deficiencies found during testing required by this Section, which have not been corrected at the time of report preparation.
   b. Deferred tests which cannot be performed at the time of report preparation due to climatic (or other) conditions.
   c. Climate (or other) conditions required for performance of the deferred tests, and the anticipated date of each deferred test.
   d. Proposed schedule for completion of report.

D. Final Commissioning Report: Complete all commissioning work not previously completed and included in the preliminary report. Provide a complete final report with all systems and commissioning data; including test plan, all reviews, inspections, test procedures, tests, and results. Final report shall include all documentation required for the preliminary report and documentation regarding resolution of previous coted deficiencies.

END OF SECTION

SECTION 21 10 00 – WATER-BASED FIRE SUPPRESSION SYSTEMS

PART 1 GENERAL

1.1 RELATED DOCUMENTS

A. Drawings and general provisions of the Contract, including General and Supplementary Conditions and Division 00 and Division 01 Specification Sections, apply to this Section.

B. Requirements of Section 20 05 00 apply to this Section.

1.2 WORK INCLUDED

A. Sprinkler System Design

B. Piping

C. Sprinkler Heads

D. Valves

E. Fire Department Connections

F. Accessories

G. Pre-Installation Conference

H. Owner Instruction

1.3 QUALITY ASSURANCE

A. General: Comply with 20 05 00 requirements.

B. Listing: All materials and equipment shall be UL listed and FM approved for the application.

C. Latest Design: Products shall be of the manufacturer's latest design.

D. Code and AHJ Compliance: Products and installation shall comply with code and Authority Having Jurisdiction (AHJ) requirements. Contractor is responsible to review and be familiar with code and local AHJ requirements. Products submitted are represented by the Contractor as complying with code and AHJ requirements.

E. Exceed Code: The Contract Documents indicate items in excess of code requirements; in all such cases the work shall be done so that code requirements are exceeded as indicated. Such work may include coverage of areas not strictly required by code, painting, concealing of piping, access provisions for system inspections, oversized mains to accommodate future expansion, etc.

1.4 SUBMITTALS

A. General: Comply with Section 20 05 00.

B. Shop Drawings:

1. Submit shop drawings of entire sprinkler system to Architect/Engineer for review; label these as "Preliminary – Not for AHJ Review". After incorporating or satisfactorily resolving Architect/Engineer review comments, submit shop drawings to AHJ for approval; label these as "AHJ Review Set"; at same time submit informational copy to the Architect/Engineer.

C. Product Data: Submit information on all products to be used; include evidence of product UL listing and FM approval. Submit proposed labeling and signage.

D. Calculations: Submit all system calculations showing compliance with NFPA and AHJ requirements.

E. Review Impacts: Architect/Engineer's review may involve changes to Contractor's design in order to comply with the Contract Documents including aesthetic issues. These changes may be substantial enough to affect drawings and calculations submitted to the AHJ and requiring a resubmittal. Contractor shall assume at least one re-submittal to the AHJ will be required and shall pay all required AHJ re-submittal and AHJ re-review fees.

1.5 GENERAL REQUIREMENTS

A. Experience: All fire sprinkler design shall be performed by a Contractor thoroughly familiar with and knowledgeable of NFPA 13, NFPA 24, local AHJ requirements, and fire sprinkler system design and installation. By virtue of submitting a bid, the Contractor is acknowledging that he does in fact have such knowledge; and all work provided will fully comply with all the requirements of these specifications. The fire sprinkler Contractor shall be qualified, as required by the AHJ to design and install all parts of the fire sprinkler system. All portions of underground fire sprinkler piping shall be installed by a licensed fire sprinkler contractor, or by a level U certified plumbing contractor, as issued by the State's Fire Marshal's office.

B. Professional Stamp: All fire sprinkler design drawings and calculations shall be prepared by and stamped by a licensed fire sprinkler professional as required by the AHJ.

C. Design: System shall be Contractor designed and approval by both the Fire Marshal and Architect/Engineer. System design shall comply with Contract Documents regarding particular system configuration as may be specified or noted (i.e. routing of mains, head locations, etc.).

D. System Description: Wet pipe or dry pipe fire sprinkler system (as indicated on plans) provided for each building with a dry pipe system serving all areas subject to freezing (dry type heads off wet system are acceptable for limited coverage areas). Buildings/ areas indicated shall be dry type as noted. All spaces within sprinklered areas shall be sprinklered as required by the AHJ.

E. WSRB Compliance: Plans shall be submitted to the Washington State Survey and Rating Bureau for review. The Contractor's design shall comply with their requirements and recommendations. The Contractor shall contact the Bureau prior to bidding and obtain their requirement and samples of reviews of similar projects.

F. Special Design Areas: Various portions of the building's fire sprinkler system require special design effort and coordination; including but not limited to: multiple design layouts, multiple calculations for these layouts, multiple meetings with code officials, multiple meetings with various contractors, multiple meetings with members of the design team, added coordination among trades, coordination with the AHJ, and coordination with the design team. The Contractor shall include in his bid costs for such special design and installation work.

1.6 PRE-INSTALLATION CONFERENCE

A. General: A pre-installation conference shall be held prior to the Contractor installing any of the materials of this section. The conference shall occur after all submittals have been satisfactorily reviewed by the Architect/Engineer and returned to the Contractor, and approximately 14 days prior to the proposed system installation date and prior to the fabrication of any system piping components. The purpose of this conference is to review the Contractors installation methods, materials, schedule, coordination with all other trades, and related construction/design issues to allow for efficient and proper construction. The Architect/Engineer and Owner will highlight various items of concern, typical problems encountered on similar projects, coordination issues, and related items.

B. Attendance: The pre-installation conference shall be attended by the General Contractor, the Contractor doing the work of this section, other contractor trades as appropriate to the proper coordination of the work of this section, the Owner's Representatives (at their option), the Engineer (at his option), and the Architect.

C. Coordination: The Contractor shall notify the Architect of the Contractor's readiness to hold the pre-installation conference at least 14 days prior to the proposed meeting time, and mutually agreed upon meeting times arranged.

1.7 REFERENCES

A. AWWA C104: Cement Mortar Lining for Ductile Iron Pipe and Fittings for Water.

B. AWWA C111: Rubber - Gasket Joints for Ductile Iron Pipe with Ductile Iron or Gray Iron Threaded Flanges.

C. AWWA C151: Ductile Iron Pipe, Centrifugally Cast for Water.

D. FM-AG: FM Global Approval Guide.

E. NFPA 13: Standard for the Installation of Sprinkler Systems.

F. NFPA 24: Installation of Private Fire Service Mains and their Appurtenances.

G. UL-FPD: Underwriters Laboratories Fire Protection Equipment Directory.

PART 2 PRODUCTS

2.1 ACCEPTABLE MANUFACTURERS

A. General: All products shall comply with Section 20 05 00, Paragraph 2.1, Acceptable Manufacturers.

B. Pipe and Fittings: Domestic manufacturer's only.

C. Valves: Crane, Grinnell, Potter-Roemer, Viking, Gem, Victaulic, Nibco, Stockham.

D. Sprinkler System Components: Reliable, Viking, Potter-Roemer, Gem, Star, Victaulic.

E. Air Compressor: Jenny, General Air Products, Air Power Products.

2.2 PIPE AND PIPE FITTINGS

A. Aboveground Piping and Fittings: Piping shall be steel or copper; in accordance

with NFPA 13. Fittings shall be suitable for 175 psi working pressure, and shall be cast iron or malleable iron screwed, grooved, welded, or soldered; in accordance with NFPA 13. Piping and fittings ran outside and exposed to the outdoors shall be galvanized type. Flexible braided steel piping serving individual heads may be used where acceptable to the AHJ, and such piping is FM approved and UL listed for the application.

B. Underground Piping and Fittings: Ductile iron pipe conforming to AWWA C151, thickness class 52 minimum; in accordance with NFPA 24. Fittings shall conform to AWWA C111, with pressure rating no less than the water district main the piping is connected to; and in accordance with NFPA 24. Pipe and Fittings shall have cement-mortar lining conforming to AWWA C104, standard thickness. Pipe and fittings shall be restrained against movement in accordance with NFPA 24. Thrust restraining joints/fittings shall be UL listed for fire main use. Exception: Piping serving fire department connections may be galvanized steel pipe externally coated and wrapped as required by code.

2.3 VALVES

A. Isolation Valves: Bronze construction, minimum 175 psi water working pressure, UL listed and FM approved, per NFPA 13, with configuration and accessories to suit application.

B. Check Valves: Iron or bronze body swing check valve, minimum 175 psi working pressure, UL listed and FM approved, per NFPA 13.

C. Accessories:

1. Wall Indicator Post: Wall mounted hand wheel, with position indicator, locking means, extension rod (length to suit application), and bright red factory enamel paint finish.

2. Indicator Posts: Cast iron construction, with operating wrench, locking means, identification plates indicating valve open/shut, adjustable sleeve, sections to suit varying buried depths, tapped for supervisory device, extension rod, base to match valve used with, and bright red factory enamel paint finish.

3. Automatic Ball Drip Valve: Straight or angle cast brass ball drip, 1/2 inch.

D. Detector Backflow and Meter: Double check type backflow preventer with weighted clapper for bypassing small flows through meter, AHJ approved type UL listed and FM approved, with tapped bosses for meter connection, galvanized iron body, and complete with meter trim (including isolation valves, union, bypass backflow preventer, and connecting pipe/fittings). Meter shall be a magnetic turbine type meeting AWWA Class 1 standards, AHJ requirements, with register reading up to 10,000,000 gallons and having 1/2-inch connections.

E. Backflow Preventer: Double check type: AHJ approved type, UL listed and FM approved, OS&Y isolation valves, with replaceable clapper rubbers, four corporation stops for testing, air vents on each check valve, and having galvanized iron check valve bodies and covers. Use compact type as necessary to suit space available as shown on plans.

2.4 ALARM VALVES--WET PIPE

A. Alarm valve shall be UL listed and FM approved for use as an alarm valve in a

wet pipe fire sprinkler system, same size as riser (unless noted otherwise).

B. Alarm valve shall be complete with pressure gauge, main drain valve, alarm switch, and all other accessories to provide a complete alarm valve assembly as required to function in accordance with NFPA standards, and as required by the AHJ.

2.5 ALARM VALVES--DRY PIPE

A. Alarm valve shall be UL listed and FM approved for use as an alarm valve in a dry pipe fire sprinkler system, size as selected by Contractor.

B. Alarm valve shall be complete with accelerator, pressure gauges, main drain valve, pressure alarm switch, alarm test valving, priming connections, drain lines/drain cup, connections for water motor alarm, check and isolation valves for air line connection, air line relief valve and all other accessories to provide a complete alarm valve assembly as required to function in accordance with NFPA standards, and as required by the AHJ.

2.6 ALARM BELLS

A. Electric Type: Electric motor driven alarm rated for outdoor installation, with alloy steel gong shell (color as selected by Architect/Engineer and acceptable to AHJ), stainless steel plunger striking tip, and 8-inch diameter. Voltage/electrical characteristics to match power, devices, and fire alarm system connected to.

B. Labeling: Alarm bells shall be labeled or provided with sign mounted adjacent to bell, as required by the AHJ. Sign shall be aluminum lithographed, with red letters on white background.

2.7 SPRINKLER HEADS

A. Wet Type - Finished Areas:

1. Pendant: Shall be low profile, glass bulb type, with temperature rating to suit application and factory chrome plated finish. Where installed through ceiling, provide with escutcheons, two piece adjustable recessed type, with factory chrome plated finish to match sprinkler heads. Quick response type.

2. Upright: Shall be glass bulb type, with temperature rating to suit application, and factory chrome plated finish. Quick response type.

3. Sidewall: Shall be glass bulb or fusible solder type, with temperature rating to suit application, and factory chrome plated finish. Quick response type.

B. Wet Type - Unfinished Areas: link/lever type or glass-bulb type, with natural bronze or chrome plated finish, temperature rating to suit application. Quick response type.

C. Dry Type:

1. General: Provide where system may be exposed to freezing temperatures with finish, length and temperature rating to suit application. Quick response type.

2. Finished Areas: Polished chrome finish type with flush type chrome plated escutcheon where installed through ceilings, soffits, and similar elements.

3. Unfinished Areas: Natural bronze finish with flush or deep type brass finish escutcheon where installed through a floor, ceiling, or similar element.

D. Sprinkler Guards: Hard-wire cage sprinkler guard, designed to protect sprinkler from mechanical damage, with chrome plated finish. Where used on exposed heads, guards shall be type that clamp to pipe; where used on recessed heads, guards shall be surface anchor type having substantial attachments to material surrounding the head (soffit plywood, etc.); provide 2x backing as needed. Provide custom fabricated guards/attachments as required.

E. Sprinkler heads shall be upright, pendant or sidewall type as required to suit application.

F. Extended Coverage Heads: Provide as necessary to allow complete coverage of all areas.

2.8 FIRE DEPARTMENT CONNECTIONS

A. Configuration: Wall or free-standing configuration as indicated (or required to suit the application). Wall type shall be flush mounted.

B. Size and Connections: As required by AHJ.

C. Construction: Cast brass construction with brass clappers, brass swivel couplings, and brass clapper pins. Clapper design shall allow for one or both inlets to be pressurized during operation. Provide each inlet with threaded brass cap, with pin lugs and chain attachment to FDC. Wall type shall have wall plate.

D. Labeling: Words "AUTO SPKR" and “FIRE DEPARTMENT CONNECTION” (or as required by the AHJ). Provided added labeling to indicate areas/system served where the service is not readily obvious; and as required by the AHJ.

E. Finish: Wall type shall have polished brass finish on all outdoor exposed components; free-standing type shall have rough brass finish.

2.9 ACCESSORIES

A. Waterflow Alarm - Flow Type Indicator: Shall be UL listed, with polyethylene paddle water flow detector, cast metal body, adjustable time delay retard mechanism to allow indicator to absorb fluctuations of water flow due to pressure surges to prevent false alarms. Electrical characteristics shall match alarm bell and available voltage.

B. Sightflow Connections: Cast iron construction, with clear acrylic windows, steel covers, and Buna-N O-rings.

C. Valve Switches: Switch for indicating operation of valve; type and configuration to suit valve used on. Switch shall have single pole, double throw type contacts, with cast aluminum housing and non-ferrous parts for corrosion resistance. Shall be weatherproof type where installed outdoors.

D. Sway Bracing/Restraints: Contractor fabricated of riser clamps, Schedule 40 pipe and pipe fittings, all welded construction, size and configuration to suit application.

E. Vaults: Shall be precast reinforced concrete type, having galvanized diamond plate lockable access cover(s), suitable for H-20 loading, sized as indicated or as required to accommodate all valves/piping shown (whichever is larger). Provide with concrete base and fully enclosed sides. Provide risers with height and quantity to allow.

F. Specialties: Access doors, gauges, and related piping specialties; see Section 20 05 19.

G. Hangers/Supports: See Section 20 05 29.

H. Sleeves Seals: See Section 20 05 30.

I. Air Compressor:

1. Sizing: By Contractor, in compliance with NFPA and AHJ requirements.
2. Type: Electric motor-driven, air cooled, single-stage, tank mounted type. Tank shall be ASME labeled with support legs for base mounting. Unit shall be complete with wiring, motor starter, pressure switch and devices for automatically controlling compressor operation. Unit shall have rubber-in-shear vibration isolators, relief valve, pressure gauge, outlet isolation valve, outlet union, and accessories for proper connections and operation.
3. Power: Unit shall be for use with 120 volt/1 phase electricity (unless noted otherwise), with a single point power connection. Provide unit with electric power disconnect; complying with NEC and code requirements.
4. Noise: Compressor noise shall not exceed Noise Criteria (NC) 35 in any octave band. Provide acoustic enclosure, remote piped air intake with a muffler, and other accessories to reduce noise as required to meet this NC level.

J. Air Maintenance Assembly: Shall be type for use with dedicated sprinkler system air compressor. Assembly shall include air line strainer, air pressure switch for compressor control, bypass globe valve, isolation valves, unions, and all related components to properly connect the air compressor to the dry pipe system, in compliance with NFPA and local code requirements.

K. Labeling:

1. General: See Section 20 05 00 for labeling of piping, valves, equipment, concealed items, and similar items.
2. Design Basis: Provide label identifying hydraulic basis of design and other design parameters, fabricated of material as required by the AHJ, with lettering type and information as required by the AHJ.
3. Other: Provide additional labels as required by AHJ, fabricated of material as required by the AHJ, with lettering type and information as required by the AHJ.

L. Signage:

1. Room Doors: Metal or self-adhesive vinyl sign with white lettering on a red background; lettering minimum of 2-inches high. Where exposed to weather sign and accessories shall be UV and corrosion resistant. Label wording as directed by the AHJ (e.g. “SPRINKLER VALVE ROOM”, “FIRE SPRINKLER RISER ROOM”, etc.). Verify AHJ labeling requirements prior to ordering.
2. FDC: Metal construction, with lettering type, information, and construction as required by the AHJ. Provide with accessories for mounting; fasteners and items exposed to weather shall be UV and corrosion resistant.

PART 3 EXECUTION

3.1 INSTALLATION

A. General: Installation of all equipment shall be performed by a Contractor specializing in this work and subject to Owner and Fire Marshal approval. Install all items in accordance with code, manufacturers' recommendations, and best construction practices.

B. Water Supply: The fire sprinkler system shall be connected to the site water supply as indicated on the drawings. All underground site work related to the fire sprinkler system shall be reviewed by the Contractor doing the work of this Section, to verify that the installed piping conforms to acceptable professional practices and governing code. The Contractor doing the work of this section by virtue of connecting to this site piping is certifying that this site piping has been reviewed and is acceptable for connection to.

C. Water Main Flushing: Flush outside fire water mains prior to connecting to inside system to prevent any contamination. Such flushing by Division 21 is in addition to any flushing performed by other trades. Failure to flush will result in system rejection. Reference NFPA 24 for requirements; coordinate with site contractor.

D. Pipe Routing:

1. Select pipe routing that maintains full personnel access to building equipment and systems, without requiring stepping over or bending down to cross sprinkler piping. Follow specific pipe routing requirements of the Contract Documents as indicated. Piping shall run parallel to building structure in a neat, workmanlike manner.

2. All piping shall be run concealed in ceiling space, attic space, pipe shafts, soffits, etc. where possible. Piping may only be exposed with Engineers approval and shall be painted as directed by the Architect/Engineer. Where piping must run exposed, it shall be ran in as unobtrusive fashion as possible, in lines parallel to major building features, as high as possible, and as directed by the Architect/Engineer.

3. Provide all necessary drilling of beams, trusses, etc; reference Section 20 05 00 for cutting requirements; structural Engineers approval is required prior to any such cutting or drilling.

E. Escutcheons: Provide chrome plated escutcheon plates at exposed pipe penetrations of all ceilings, floors and walls.

F. Conflict Prevention:

1. Review all building and system plans carefully and arrange the fire sprinkler work to avoid interferences and conflicts with other trades. Discuss and coordinate proposed sprinkler routing with other trades. The fire sprinkler system has the lowest priority of all building systems and is required to accommodate the space requirements of other systems.

2. If piping routes are not properly coordinated with other trades and structures, rerouting and possible re-sizing will be required as directed by the Architect/Engineer. Offset, crossover and otherwise route piping to install system in available space.

G. System Drainage: Special care shall be taken to ensure that entire sprinkler system is drainable in accordance with code. Provide drain valves as required (with labels) to allow for drainage; valves shall be concealed (with access doors) where possible; provide valves with provisions (male pipe nipple) for attaching temporary drain lines (where needed). Extend main drain(s) and 1-inch inspector's test connections to outside for drainage.

H. Fire Department Connections (FDC): Locate as approved by the AHJ and agreed to by the Architect/Engineer. Locations shown on drawings are preliminary only. Include in bid an additional 50 linear feet of FDC piping and two elbows to allow for an alternate location. Paint free standing FDC's (and the exposed connecting pipe) bright red (unless another color is required by the AHJ).

I. Alarm Devices: Provide alarm indicators as required by the AHJ. Connection of devices to the fire alarm system is by Division 26 (unless indicated otherwise). Adjust water flow indicator time delay as necessary to prevent false alarms due to pressure fluctuations.

J. Labeling: Provide labeling of items per Section 20 05 00. Provide additional labeling of items per AHJ requirements. All drain valves, alarm bells, and risers shall be labeled to clearly indicate purpose and area served. Label riser with hydraulic basis of design information. All piping shall be labeled per Section 20 05 00.

K. Posted Plans: Provide reduced size as-built (or a building key plan) with all system drains and valves clearly indicated. Laminate plan(s) and post adjacent to each riser (or as directed by the Architect/Engineer and AHJ). Provide copy of plan(s) with the O&M Manual.

L. Tamper Switches: Provide valve tamper switches at all isolation valves and as required by the AHJ to indicate valves not fully open. Connection to central fire alarm system shall be by Division 26.

M. Sprinkler Heads: Heads shall be centered in ceiling panels. Where "scored" ceiling panels are used, heads shall be located to be centered in the flat portion of the tile between "scores".

N. Head Protection: Provide wire cage protectors for heads susceptible to damage (this includes all heads in mechanical loft areas with sprinkler heads 7 feet or less above walking surface, all gym heads, outside soffit heads below 9 feet, and similar areas).

O. Hangers and Supports: Shall comply with NFPA 13 and Section 20 05 29. See also structural drawings for added limitations/requirements of supports and attachments to structure.

P. Room Signage: Rooms containing fire suppression risers, system control valves, and other major fire suppression components shall have signage on the outside of the door to the room. Verify AHJ requirements and locations prior to ordering.

3.2 SYSTEM DESIGN

A. General: System shall be Contractor designed in accordance with NFPA 13, AHJ requirements, and additional requirements as cited in the Contract Documents.

B. Hydraulically Designed: System design shall be based on hydraulic calculations using approved water flow test data on the water supply main serving the fire protection system. Such test data must meet the approval of the AHJ and the Engineer. Any water flow data indicated on the drawings is preliminary only. It shall be the Contractor's responsibility to obtain updated water flow data (including new water tests) and pay all associated test fees or charges. Design and calculations shall include complete system, including water main to building, and extending as far back into the local utility systems (i.e. to reservoirs) as deemed necessary by the AHJ.

3.3 TESTING

A. Testing: The systems shall be hydrostatically and operationally tested in accordance with the requirements of NFPA 13 and the AHJ. Any changes required to meet time or flow test requirements shall be made without additional cost to the Owner. Certificates of acceptance shall be submitted to the Architect/Engineer.

3.4 OPERATING AND OWNER INSTRUCTIONS

A. Typed Instructions: Typewritten, plastic covered, framed operational and maintenance instructions shall be mounted in the building(s) near each fire sprinkler riser. Information shall clearly indicate portion of the building covered by the system, type of system, location of sub-risers, locations of system drains, when system was placed into service, installed, installers name (company) and contact information for service, how to close and open system main valve, and other pertinent operational instructions. Provide reference to O&M manuals provided to the Owner for additional operation and maintenance instructions.

B. O&M Manual: See Division 01 and Division 20.

C. Owner Instructions: The Owner or his representative shall be instructed by the Sprinkler Contractor in the operation of the system. The instruction shall be given by Contractor's personnel who are considered qualified in the opinion of the Architect/Engineer and shall be for a minimum of two hours. Instruction shall include location of all valves, drains, and pipe routing, as well as proper maintenance and testing procedures.

END OF SECTION

SECTION 22 11 00 – FACILITY WATER DISTRIBUTION

PART 1 GENERAL

1.1 RELATED DOCUMENTS

A. Drawings and general provisions of the Contract, including General and Supplementary Conditions and Division 00 and Division 01 Specification Sections, apply to this Section.

B. Requirements of Section 20 05 00 apply to this Section.

1.2 WORK INCLUDED

A. Domestic Water Piping

B. Non-Potable Water Piping

C. Valves

D. Water Hammer Arrestors

E. Trap Primers

F. Backflow Preventers

G. Water Meters

H. Electric Heat Trace

I. Domestic Water Expansion Tanks

J. Water Service Connections

K. Testing and Inspection

L. Flushing and Disinfection

1.3 DEFINITIONS

A. "Lead-Free" means not containing more than 0.2% lead in solder and flux; and not more than a weighted average of 0.25% lead in wetted surfaces of pipes, pipe and plumbing fittings and fixtures.

1.4 SUBMITTALS

A. General: Submittals shall comply with Section 20 05 00.

B. Product Data: Submit manufacturer's product information on all items to be used.

C. System Tests and Inspections: Submit documentation showing systems have satisfactorily passed all pressure tests and code inspections.

D. Cleaning and Disinfection: Submit documentation regarding completion of flushing, disinfection, bacteriological tests, and Health Department's acceptance of tests and system.

1.5 GENERAL REQUIREMENTS

A. ANSI/NSF Compliance: All items in contact with potable water shall be lead free in accordance with ANSI/NSF 61. Plastic piping system components shall comply with ANSI/NSF 14. Only lead-free solder shall be used.

B. Valves: Shall be dezincification resistant, and shall not contain more than 15%

zinc in their chemical composition.

1.6 REFERENCES

A. ASME B16.3: Malleable Iron Threaded Fittings.

B. ASME B16.15: Cast Bronze Threaded Fittings: Classes 125 and 250.

C. ASME B16.18: Cast Copper Alloy Solder Joint Pressure Fittings.

D. ASME B16.22: Wrought Copper and Copper Alloy Solder Joint Pressure Fittings.

E. ASME B16.24: Cast Copper Alloy Pipe Flanges and Flanged Fittings: Classes 150, 300, 400, 600, 900, 1500, and 2500.

F. ASTM A53: Pipe, Steel, Black and Hot Dipped, Zinc Coated, Welded and Seamless.

G. ASTM E84: Standard Test Method for Surface Burning Characteristics of Building Materials.

H. ASTM A312: Seamless, Welded, and Heavily Cold Worked Austenitic Stainless Steel Pipes.

I. ASTM A403: Wrought Austenitic Stainless Steel Piping Fittings.

J. ASTM A530: General Requirements for Specialized Carbon and Alloy Steel Pipe.

K. ASTM A774: As-Welded Wrought Austenitic Stainless Steel Fittings for General Corrosive Service at Low and Moderate Temperatures.

L. ASTM A 778: Welded, Un-annealed Austenitic Stainless Steel Tubular Products.

M. ASTM B16.18: Seamless Copper Water Tube.

N. ASTM B32: Solder Metal.

O. ASTM D1784: Chlorinated Poly (Vinyl Chloride) CPVC Compounds.

P. ASTM F437: Threaded Chlorinated Poly (Vinyl Chloride) CPVC Plastic Pipe Fittings, Schedule 80.

Q. ASTM F439: Socket-Type Chlorinated Poly (Vinyl Chloride) CPVC Plastic Pipe Fitting.

R. ASTM F441: Chlorinated Poly (Vinyl Chloride) CPVC Plastic Pipe.

S. ASTM F493: Solvent Cement for Chlorinated Poly (Vinyl Chloride) CPVC Pipe and Fittings.

T. ASTM F876: Standard Specification for Cross-linked Polyethylene (PEX) Tubing.

U. ASTM F877: Standard Specification for Cross-linked Polyethylene (PEX) Plastic Hot and Cold Water Distribution Systems.

V. ASTM F1960: Standard Specification for Cold Expansion Fittings with PEX Reinforcing Rings for Use with Cross-linked Polyethylene (PEX) Tubing.

W. AWS A5.8: Filler Metals for Brazing and Braze Welding.

X. AWWA B300: Hypochlorites.

Y. AWWA B301: Liquid Chlorine.

Z. AWWA M20: Water Chlorination and Chlorination Practices and Principles, 2nd edition.

AA. ANSI/NSF Standard 14 Plastics Piping System Components and Related Materials.

BB. ANSI/NSF Standard 61 Drinking Water System Components – Health Effects.

PART 2 PRODUCTS

2.1 ACCEPTABLE MANUFACTURERS

A. Products shall comply with Section 20 05 00, 2.1, Acceptable Manufacturers.

B. Pipe and Fittings: Elkhart, CTS, Mueller, Cerro, Cambridge-Lee, US Steel, Anvil International, Wheatland Tube, Weldbend, Exltube.

C. PEX Tubing and Fittings: Uponor/Wirsbo, Viega, Vanguard, Zurn, Watts.

D. Valves: Conbraco/Apollo, Nibco, Stockham, Walworth, Milwaukee, Kitz, Red-White, Watts, Hammond.

E. Electric Heat Trace: Raychem, Chromalox.

F. Pressure Reducing Valves: Conbraco/Apollo, Watts, Cla-Val, Bell & Gossett, Zurn/Wilkins.

G. Thermostatic Mixing Valves: MCC Powers, Leonard, Symmons.

H. Backflow Preventers: Conbraco/Apollo, Febco, Watts, Ames, Zurn/Wilkins.

I. Balancing Valves: Bell & Gossett, Taco, Armstrong, Red-White.

J. Additional manufacturers are as listed for each individual item.

2.2 PIPE AND FITTINGS - MATERIALS

A. Copper Pipe and Fittings:

1. Pipe: Seamless copper water tube, hard temper (unless noted otherwise), type K or L as indicated, per ASTM B88.
2. Fittings:
   a. Solder-Joint: Wrought copper and bronze fittings per ASME B 16.22 and cast copper alloy fittings per ASME B16.18, cast bronze threaded fittings per ASME B16.15.
   b. Flanged: Cast bronze fittings per ASME B16.24.
   c. Solder Material: 95/5 tin-antimony solder per ASTM B32 or “Silvabrite 100" (95.5 tin/4 copper/0.5 silver) solder; lead free.
   d. Brazing Material: AWS A5.8, BCuP-5.

B. Galvanized Steel Pipe and Fittings:

1. Pipe: Seamless hot-dip galvanized steel pipe, per ASTM A 53, Type E, Grade B. Schedule 40 unless indicated otherwise.
2. Fittings: Galvanized, malleable-iron, threaded, per ASME B16.3.

C. Stainless Steel Pipe and Fittings:

1. Pipe: Seamless or welded stainless steel per ASTM A778 or A312, type 304L or 316L, tolerances per ASTM A 530. Schedule 40 unless indicated otherwise.
2. Fittings:
   a Threaded: Constructed of same material as piping, per ASTM A774 or A403, suitable for 150 psi swp.
   b Welded: Constructed of same material as piping, weld fittings, per ASTM A774 or A403, suitable for 150 psi swp.
   c. Flanged: Constructed of same material as piping, 150 pound class.

D. PEX Pipe and Fittings:

1. Pipe: Cross-linked polyethylene (PEX), manufactured per ASTM F876 and F877. Color shall be blue for cold water systems, and red for hot water and hot water recirculation systems. Piping used underground shall be continuous with no joints or fittings and be rated for underground use by the piping manufacturer.
2. Fittings: Pipe manufacturers standard methods, manufactured in accordance with recognized standards.
3. Ratings: Minimum pressure rating of 100 psi at 180 deg F, and 80 psi at 200 deg F in accordance with the Plastic Pipe Institute standards.
4. Firestop Penetrations: Piping system manufacturer (or fire seal manufacturers) shall have listed methods (acceptable to the AHJ) for piping penetrations through rated building elements (for the type of elements penetrated on this project).
5. Ultraviolet (UV) Light Exposure: Piping shall be meet or exceed a 60 day exposure to UV light in accordance with ASTM F876. Piping which may be exposed to UV light after installation shall have an insulation jacket with UV protection (or equivalent method) approved by the piping manufacturer to protect the pipe from UV exposure.
6. Chlorine Resistance: Piping and system components used shall be rated for use with 100% chlorine at 140 deg F in accordance with ASTM F876 per PEX 5006.
7. Intermediate Support (Contractor Option): Galvanized steel channel, sized and shaped to match PEX pipe and to allow for increased spacing between supports. Minimum 23 gauge. Subject to AHJ approval. Manufactured by pipe manufacturer support is used with.

2.3 PIPE AND FITTINGS - APPLICATIONS

A. Domestic Water Piping - Above Ground: Type L or K copper with with soldered or flanged joints, stainless steel, or PEX; except as follows:

1. Where run exposed in finished areas shall be stainless steel, or be chrome plated copper, or be copper with a chrome plated sleeve.
2. All water piping within 20 feet of water heater shall be copper.

3. All piping upstream of main water header pressure reducing valve shall be copper.

B. Domestic Water Piping - Below Ground: Type K copper tubing with silver brazed joints; except that piping within the building footprint serving individual fixtures may be type L (soft or hard temper) copper or PEX.

C. Trap Primer Piping: Type L or K "soft" or "hard" (bending temper) copper, with compression fittings or soldered joints or PEX.

2.4 VALVES

A. Ball Valves:

1. 2 Inches and Smaller: 600 psi non-shock cold working pressure, 100 psi at 300 deg F, bronze body, full port, 2 piece construction, anti-blowout stem, reinforced PTFE seats, stainless steel or chrome plated brass or silicon bronze ball, lever handle, solder or threaded connections. Provide with extended lever handle where valve is installed in systems with insulation thickness greater than 0.5 inch. Nibco S-585-66-LF, T-585-66-LF, Nibco S-585-80-LF, T-585-80-LF (or approved).

2. 2-1/2 Inches and Larger:

a. Cold Water Applications - Copper Alloy: 400 psi non-shock cold working pressure copper alloy body, full port, anti-blowout stem, PTFE seats, stainless steel or chrome plated brass ball, plated steel lever handle. Nibco T-FP-600A-LF (or approved).

b. Stainless: Class 150 stainless steel body, split-body full bore design, anti-blowout stem, carbon filled TFE seats, stainless steel ball, stainless steel trim, plated steel lever handle. Nibco F-515-S6-F-66-FS (or approved).

c. Cast Iron: Class 125 psi-swp, cast iron body, split-body full port, anti-blowout stem, PTFE seats, stainless steel ball and stem. Conbraco/Apollo 6P Series (or approved).

B. Butterfly Valves:

1. 2 Inches and Smaller: 125 psi-swp bronze body, stainless steel disc and extended stem, with solder or threaded connections as required. Milwaukee "Butterball" Model No. BB2 (or approved).

2. 2-1/2 Inches and Larger: 200 psi non-shock cold water, ductile iron body, extended neck, molded-in seat EPDM liner, stainless steel stem, and aluminum bronze disc. Provided with lugs for dead-end service. Nibco LD-2000, WD-2000 (or approved).

3. Lug Type: Butterfly Valves installed at equipment or other system components which may be disconnected from the system shall be lug type suitable for dead end service.

C. Globe Valves:

1. 2 Inches and Smaller: 125 psi-swp bronze globe, threaded bonnet, Teflon or bronze disc, solder or threaded connection. Nibco S-211, T-211 (or approved).

2. 3 Inches and Larger: 125 psi-swp iron body globe, bronze mounted, bronze

or Teflon disc, flanged. Nibco F-718-B (or Approved).

D. Check Valves:

1. 2 Inches and Smaller:

   a. Horizontal: 125 psi-swp bronze body horizontal swing check valve, regarding type, y-pattern, renewable seat and disc, solder or threaded connection. Nibco S-413-LF or T-413-LF (or approved).

   b. Vertical: 125 psi-swp bronze body vertical inline check valve, stainless steel or bronze disk holder, Buna-N disk, stainless steel spring actuated, solder or threaded connection. Nibco S-480-LF or T-480-LF (or approved).

2. 2-1/2 Inches and Larger:

   a. Horizontal: 125 psi-swp iron body vertical inline “silent” check valve, wafer or flanged style, renewable seat and disk, stainless spring actuated, bronze disk. Nibco W-910 (or approved).

   b. Vertical: 125 psi-swp iron body vertical inline “silent” check valve, wafer or flanged style, renewable seat and disk, stainless spring actuated, bronze disk. Nibco W-910, F-910 (or approved).

E. Balancing Valves: Calibrated balance valve, ball or globe type, bronze body, with brass readout valves with integral EPT insert and check valve to minimize fluid loss during balancing. Valve shall have calibrated nameplate and memory stop. Rated for 200 psig working pressure at 250 degrees F. Valve shall be same size as pipe installed in. Bell & Gossett "Circuit Setter" (or approved).

F. Drain Valves: Bronze ball valve, minimum 125 psi-swp, anti-blowout stem, stainless steel or chrome plated brass ball, reinforced TFE seat, solder or threaded inlet connection, male 3/4 inch hose thread outlet connection, with brass cap and chain. Nibco S-585-70-HC, T-585-70-HC (or approved).

G. Pressure Reducing Valves:

1. 2 Inches and Smaller: Bronze body construction, renewable nickel alloy or stainless steel seat, lead free, with integral strainer and union inlet connections. Adjustable range 25 to 75 lbs, suitable for inlet pressures up to 300 psi. Watts Series LFU5B (or approved).

2. 2-1/2 Inches and Larger: Ductile iron or bronze body, bronze trim, 150 pound pressure class, with flanged or screwed ends. Valve shall be globe type, with adjustment range from 15 to 75 psi. Valve shall be a hydraulically operated, diaphragm-actuated pressure reducing valve. Diaphragm shall consist of a nylon fabric bonded with a synthetic rubber and shall not be used as a seating surface. Packing glands and/or stuffing boxes are not permitted, and there shall be no pistons operating the valve or pilot controls. All necessary repairs shall be possible without removing valve from the line. The pilot control shall be a direct-acting, adjustable, spring-loaded, normally open, diaphragm valve, designed to permit flow when controlled pressure is less than the spring setting. The control system shall include a fixed orifice, flow strainer, and speed control. Cla-Val Series 90-01 (or approved).

H. Thermostatic Mixing Valves - Master Mixing:

1. Type: Hot and cold water thermostatic mixing valve, thermostatic type, Powers “Hydroguard XP” Series (or approved).
2. Construction: Lead free brass (or bronze) body construction with union inlets, combination strainer check-stops, piping connection arrangement to suit application and as indicated. Rated for 125 psi at 200 deg F.
3. Listing: ASSE 1017 and CSA B125.
4. Range: Adjustable from 90° F to 160° F, with an approach temperature of 5 deg F. Setting shall be lockable. For use with hot water from 120 to 180 deg F; and cold water from 40 to 80 deg F.
5. Size: Valve shall be sized by manufacturer to handle indicated gpm with maximum 10 psi pressure drop (unless noted otherwise). Where gpm is not indicated, use following gpm’s according to tempered (i.e. mixed) water line size shown connecting to valve:

Line Size	Maximum gpm
1/2"	7
3/4"	11
1"	20
1-1/4"	34
1-1/2"	55

6. Finish: Rough brass.

I. Thermostatic Mixing Valves - Individual Fixtures (1 to 2): Hot and cold water thermostatic mixing valve for serving 1 to 2 fixtures. Brass construction, with stainless steel internals, integral checks and locking nut to prevent unauthorized adjustment. Adjustable from 90 to 110 degrees F, with accuracy in accordance with ASSE 1016. Valve shall have capacity of at least 2 gpm at 20 psi differential, and control down to 0.5 gpm. MCC Powers “Hydroguard Series 480" (or approved).

J. Thermostatic Mixing Valves - Individual Fixtures (3 to 6): Hot and cold water thermostatic mixing valve for serving 3 to 6 fixtures. Brass construction, with stainless steel internals, integral checks and temperature adjustment knob with locking feature to prevent unauthorized adjustment. Adjustable from 85 to 120 degrees F, with accuracy in accordance with ASSE 1017. Valve shall have capacity of at least 8 gpm at 20 psi differential, and control down to 0.5 gpm. MCC Powers “Hydroguard Series 490" (or approved).

K. Pressure Relief Valves: ASME rated pressure relief valve, bronze body, stainless steel spring, set for pressure indicated or as required to protect system from over pressure. Valve shall have minimum 400,000 BTU/HR relief capability (at set pressure) and no smaller than 3/4-inch connection sizes.

2.5 ACCESSORIES

A. Water Hammer Arrestors: All metal, factory pre-charged with inert gas, sealed internal bellows; 125 psi working pressure. All wetted parts shall be type 300 stainless steel, brass or copper. PDI (Plumbing and Drainage Institute) sizes as indicated. Where not sized, provide sizes in accordance with PDI standards. Zurn "Shoktrol", Wade "Shokstop", or J. R. Smith "Hydrotrol".

B. Trap Primer Valve:

1. Pressure Drop Type: Activated by drop-in water pressure. Constructed of corrosion resistant brass with integral backflow preventor, vacuum breaker ports, distribution manifold to suit number of drains served, adjustable to line pressure for water delivery. Precision Plumbing Products Model P-1 and P-2 (or approved).
2. Water Flow Type: Activated by flow of water in line through the trap primer valve. Brass construction with integral air-gap backflow preventor, stainless steel screen, delivering 0.84 ounces of water at 20 psi with 5 seconds of water flow. Precision Plumbing Products “Prime-Pro” (or approved).

C. Trap Primer Valve - Electric: Bronze body solenoid valve, 115 volt, with 6 foot power cord, and recycle timer having manual on switch and fuse protection. Shall have integral 1" air gap and distribution manifold to serve 1 to 4 floor drains. Shall Provide minimum 2 oz water at 20 psi per drain served. Precision Plumbing Products “Mini-Prime” (or approved).

D. Solenoid Valves: Listed for use on Domestic Water systems, two-way operation, normally closed, composite body, stainless steel springs, NSF 61 listed, and CSA (or UL) coil. Same size as pipe installed. 120 volt or 24 volt AC; coordinate voltage selection with trade providing power and control of valve. ASCO Series 212 (or approved).

2.6 BACKFLOW PREVENTERS

A. Reduced Pressure Type:

1. General: Washington State approved, with air gap drain fitting and resilient seated full flow shutoff valves and test cocks. Same size as connecting pipe. Configuration to suit application. Conforming to AWWA C511.
2. 2 Inches and Smaller: Bronze body, stainless steel springs, bronze ball valves, 175 psi working pressure, threaded end connections.
3. 2-1/2 Inches and Larger: Ductile iron body, internal and external epoxy coating per AWWA C550, OS & Y gate isolation valves, bronze trim, stainless steel springs, 175 psig working pressure, Class 125 flanged end connections (grooved connections allowed where mechanically coupled piping systems are allowed).
4. Discharge: Discharge from intermediate relief valve assembly shall not exceed 190 gpm for 2-inch and smaller backflow preventers, and not exceed 560 gpm for larger backflow preventers (rated at 75 psig inlet pressure).

B. Double Check Type:

1. General: Washington State approved, with resilient seated full flow shutoff valves and test cocks. Same size as connecting piping. Conforming to AWWA C510.
2. 2 Inches and Smaller: Bronze body, stainless steel springs, bronze ball valves, 175 psi working pressure, threaded end connections.
3. 2-1/2 Inches and Larger: Ductile iron body, internal and external epoxy coating per AWWA C550, OS & Y gate isolation valves, bronze trim, stainless steel springs, 175 working pressure, Class 125 flanged end connections (grooved connections allowed where mechanically coupled piping systems

are allowed).

2.7 WATER METERS

A. Hydronic System Make-up Water Meter: Magnetic drive turbine meter, with bronze outer cases, high impact resistant plastic register lid and clamp band, plastic inlet hub, rotor and strainer. Bottom plate shall be of bronze or enamel coated cast iron, with thick rubber liner for protection, and attached to meter housing with stainless steel bolts and washers. Register shall be magnetically driven and hermetically sealed between a glass dome and metal housing. Register shall read in U.S. gallons, minimum 10,000,000 gallon capacity, and with 10 gallons/sweep hand revolution. The clamp band shall allow for positioning the register in the most convenient reading position. Meter shall be suitable for up to 175 psig and 32 to 130 degree F temperatures. Mueller-Hersey Model MVR (or approved).

B. Hydronic System Make-up Water Meter-Electric Contact Type: Magnetic drive oscillating piston or turbine type. Shall be of bronze construction, with repeatability plus or minus 1%, accurate to plus or minus 1.5% over entire flow range, and suitable for 150 psi operating pressure. Meter shall have register reading in U.S. gallons, minimum 10,000 gallon capacity with sweep hand. Meter shall have electrical contacting register, with normally open "dry contacts," rated for 10 amps at 250 volts A.C.; contacts shall close at preset gallons/contact setting. Size as shown on the drawings. Carlon Model JSJ (or approved).

C. Water Main Water Meter: Magnetic drive turbine meter, with bronze outer cases, high impact resistant plastic register lid and clamp band, plastic inlet hub, rotor and strainer. Bottom plate shall be of bronze or enamel coated cast iron, with thick rubber liner for protection, and attached to meter housing with stainless steel bolts and washers. Register shall be magnetically driven and hermetically sealed between a glass dome and metal housing. Register shall read in U.S. gallons, minimum 10,000,000 gallon capacity, and with 10 gallons/sweep hand revolution. The clamp band shall allow for positioning the register in the most convenient reading position. Meter shall be suitable for up to 175 psig and 32 to 130 degree F temperatures. Mueller-Hersey Model MVR (or approved).

2.8 DOMESTIC WATER EXPANSION TANK

A. Type: Diaphragm thermal expansion absorber. Amtrol “ST” Series (or approved).

B. Construction: Welded steel construction, with polypropylene liner, butyl/EPDM diaphragm, stainless steel air charging valve, 175 psig working pressure, configuration/connections to suit installation, NSF 61 approved, and ASME certified.

C. Capacity: As indicated on plans; where not indicated provide 4.0 gallon tank volume (minimum).

PART 3 EXECUTION

3.1 GENERAL

A. Workmanship: Installation of all items shall comply with code, best professional

practices, manufacturers written installation instructions, and to allow for proper functioning of items being connected to.

B. Complete System: Provide all piping as indicated and as required to allow supply connections to each fixture and equipment item requiring water supply. Provide offsets as required to accommodate building construction and access requirements per Section 20 05 00. For multistory buildings include costs to offset vertical piping at each floor level since structural member locations will not be the same on each floor.

C. Coordination: Coordinate installation of items with all trades that are affected by the work to avoid conflicts.

D. Equipment By Others: Provide piping connections to equipment furnished by others in accordance with Section 20 05 00.

E. Hot Water Adjustment: Adjust the hot water circulation system for uniform circulation throughout the system; provide balancing of system where hot water circulation system has multiple branches with balancing valves (see balancing specification Section). Install, set, and adjust and all system components for proper operation.

3.2 PIPE AND FITTINGS

A. Concealed: All piping in finished areas shall be installed concealed unless specifically noted otherwise. Provide escutcheons where piping is allowed to be exposed and pipe passes through building elements (i.e. walls, floors, ceilings, etc.).

B. Non-Obstructing: Install piping at such heights and in such a manner so as not to obstruct any portion of windows doorways, passageways, or access to any items requiring routine service, maintenance, or inspection. Offset or reroute piping as required to clear any interferences which may occur.

C. Drawing Review: Consult all drawings for location of pipe spaces, ducts, electrical equipment, ceiling heights, door openings, window openings, and other details and report discrepancies or possible conflicts to Architect/Engineer before installing pipe.

D. Insulation: Allow sufficient clearances for installation of pipe insulation in thickness specified. If interferences occur, reroute piping to accommodate insulation.

E. Drainage: Slope all piping to low points to allow the system to be drained. Provide added drain valves where system cannot be drained through fixtures.

F. Install all piping parallel to the closest wall and in a neat, workmanlike manner. Horizontal exposed straight runs of piping shall not deviate from straight by more than 1/4-inch in ten feet. Vertical piping shall not deviate from plumb by more than 1/8-inch in ten feet.

G. Do not run any piping above electrical panels (and similar electrical equipment). Provide offsets around such panels as necessary.

H. Prior to the joining of any section of pipe to a pipe run, the section shall be thoroughly cleaned inside and out, the ends shall be reamed to remove any cutting burrs and piping prepared as recommended by piping and fitting

manufacturer.

I. Threaded Connections: Cut piping carefully, ream, thread and work into place without springing. Use TFE tape or lead and graphite lubricant (on male threads only).

J. Soldered Connections: Polish contact surfaces of fittings and pipes with emery cloth before fluxing male and female surfaces of joints. Steel wool and sandpaper not permitted for polishing.

K. Unions: Install unions in pipe connections to valves, coils, and any other equipment where it may be necessary to disconnect the equipment or piping for repairs or maintenance; and as indicated. Where flanged connections occur at equipment additional unions are not required unless indicated otherwise.

L. Insulating Unions: Install dielectric insulating connectors between all connections of copper piping and steel piping of steel equipment. Where flanged connections occur use insulating type flanges.

M. PEX Tubing:

1. Minimum Bend Radius (cold bending): No less than six times the outside diameter. Use a bend support as supplied by the PEX tubing manufacturer for tubing with a bend radius less than stated.
2. Install tubing in accordance with the tubing manufacturer's recommendations and as indicated in the installation handbook.
3. Do not install PEX tubing within 6 inches of gas appliance vents or within 12 inches of any recessed light fixtures.
4. Do not solder within 18 inches of PEX tubing in the same waterline. Make sweat connections prior to making PEX connections.
5. Do not expose PEX tubing to direct sunlight for more than 30 days.
6. Ensure no glues, solvents, sealants or chemicals come in contact with the tubing without prior permission from the tubing manufacturer.
7. Use grommets or sleeves at the penetration for PEX tubing passing through metal studs.
8. Protect PEX tubing with sleeves where abrasion may occur.
9. Use strike protectors where PEX tubing penetrates a stud or joist and has the potential for being struck with a screw or nail.
10. Use tubing manufacturer supplied bend supports where bends are less than six times the outside tubing diameter.
11. Minimum horizontal supports are installed not less than 32 inches between hangers in accordance with model plumbing codes and the installation handbook.
12. PEX riser installations require epoxy-coated riser clamps installed at the base of the ceiling per floor.
13. A mid-story support is required for riser applications.
14. Pressurize tubing with air in accordance with applicable codes or in the absence of applicable codes to a pressure of 25 psi above normal working

pressure of the system.

15. Comply with safety precautions when pressure testing, including use of compressed air, where applicable. Do not use water to pressurize the system if ambient air temperature has the possibility of dropping below 32 deg F.

16. At locations where the piping may be exposed to UV light, piping system shall be completely covered and protected to prevent such exposure.

N. Plastic Pipe with Solvent Joints:

1. Solvent Joints: The outside of the pipe shall be chamfered to a minimum of 1/16 inch at approximately 22 degrees. Chemicals used must penetrate the surface of both pipe and fitting which will result in complete fusion at the joint. Use solvent and cement only as recommended by the pipe manufacturer.

2. Plastic to Metal Connections: Work the metal connection first. Use a non-hardening compound on threaded connections. Use only light wrench pressure. Connections between metal and plastic are to be threaded utilizing female threaded adapters only, not male adapters.

3.3 VALVES

A. Type: Ball type only.

B. General: Provide isolation valves as shown on the drawings. In addition to those shown, provide added valves to allow for the isolation of each group of fixtures, all water heaters, and all individual equipment items (e.g. dishwashers, heat exchangers, etc.).

C. Installation: Install valves so as to be easily accessible and oriented to permit ease of operation. Valve stem shall be directed toward operator in either the vertical or horizontal direction. Provide access doors for valves not otherwise accessible.

D. Pressure Reducing Valves: Provide with by-pass line, isolation valves, unions (on valves with threaded connections), and pressure gauges. Set initial pressure and adjust as required so that all fixtures/devices served have sufficient water pressure.

E. Drain Valves: Provide drain valves at the base of all risers (except not required where risers can be drained through plumbing fixtures or equipment drains). Provide drain valves at piping low points where the piping cannot be drained through fixtures, hose bibs, or equipment drains.

F. Balancing Valves: Provide balancing valves in hot water circulation piping where indicated and where required to allow for equal distribution of hot water circulation flows.

G. Thermostatic Mixing Valve: Provide inlet and outlet isolation valves and outlet thermometer.

3.4 ACCESSORIES

A. Water Hammer Arrestors: Install per manufacturer's instructions, just upstream of last fixture on branch line. Provide water hammer arrestors on branch water lines serving fixtures with flush valves, washer machines, solenoid valves, and

similar quick-acting valves. Water hammer arrestors are typically not shown on the plans, but shall be provided per this paragraph. Provide ball isolation valve in piping to arrestor. Where access cannot be provided at water line location, the water hammer arrestor piping may be extended vertically and the water hammer arrestor located above ceiling outside of plumbing chase.

B. Trap Primers: Provide trap primers to all vented floor drains, floor receptors, and where required by the code. Install with an isolation valve in the branch line to the trap primer valve.

C. Access Doors: Provide access doors to all valves, water hammer arrestors, trap primers, backflow preventers, and any other piping accessories which would otherwise be inaccessible. See Section 20 05 19 for access door specifications.

D. Backflow Preventers:

1. General: Provide backflow preventers as indicated in the Contract Documents and as required by code. Backflow preventers with threaded connections shall be installed with unions for ease of removal. Install to be accessible for testing and service. Pipe air gap drains to nearest floor drain or point of drainage.

2. Inspection: Arrange and pay for inspection of backflow preventers as required by the local AHJ and obtain installation acceptance from the AHJ.

3 Certification: Following inspection arrange and pay for testing of backflow preventers by certified individuals in accordance with applicable portions of the Washington Administrative Code, other applicable regulations as set forth by the Washington State Department of Social and Health Services, and as required by the AHJ.

E. Domestic Water Expansion Tanks: Provide isolation valve for servicing expansion tank. All isolation valves between expansion tank and water heater shall be labeled, “Expansion Tank Service Valve: Must Be Open When System Is Operating.”

3.5 WATER SERVICE CONNECTIONS

A. Provide connection to water main outside the building as shown on the drawings.

B. Provide sleeve in floor for entrance of service main into building, seal watertight; anchor service main firmly to building. See Section 20 05 30 for sleeves and seals.

3.6 TESTING AND INSPECTION

A. All piping shall be tested, inspected, and approved by the local authority having jurisdiction prior to being concealed or covered.

B. Testing shall be witnessed by the plumbing inspector and the Architect/Engineer (at his option). Notify Architect/Engineer minimum 72 hours prior to date of testing, and mutually agreed upon times arranged.

C. Piping shall be hydrostatically tested for a period of 2 hours (or as required by local authority having jurisdiction), during which time no drop in pressure or leakage shall occur.

D. Test pressure shall be not less than 150 percent of the maximum to which the

pipe will ordinarily be subjected; but in no case less than 75 psig.

E. Any leaks or defective piping disclosed by testing and inspection shall be repaired with new materials and the system re-tested.

F. Provide documentation to the Engineer indicating that the system has been completely pressure tested, and all portions inspected and accepted by the local authority having jurisdiction.

3.7 FLUSHING AND DISINFECTION

A. System Flushing: After tests are completed, all water piping shall be flushed. In general, sufficient water shall be used to produce a minimum water velocity of 2.5 feet per second through piping being flushed. Flushing shall be continued until discharge water shows no discoloration. System shall be drained at low points. Strainer screens shall be removed, cleaned, and replaced in line. System valves and fixture faucets shall be opened and re-closed to completely flush system. After flushing and cleaning, systems shall be prepared for disinfection service by immediately filling water piping with clean, fresh potable water. Any stoppage, discoloration, or other damage to the finish, furnishings, or parts of the building during this process shall be repaired by the Contractor.

B. Disinfection:

1. Upon completion of the job and prior to final acceptance, the plumbing system shall be disinfected with Chlorine solution. Review procedures and disinfection with the authority having jurisdiction to insure that all work complies with code requirements. Verify any deviations from specified procedures with the Architect/Engineer prior to proceeding. The chlorinating material shall be either liquid chlorine conforming to AWWA B301 or hypochlorite conforming to AWWA B300 (or as otherwise required by the authority having jurisdiction). Water chlorination procedure shall be in accordance with AWWA M20 (or procedure acceptable to AHJ and to the Architect/Engineer). The chlorinating material shall provide a dosage of not less than 50 parts per million and shall be introduced into the system in an approved manner. The treated water shall be retained in the pipe long enough to destroy all non-spore-forming bacteria.

2. The retention time shall be at least 24 hours and shall produce not less than 10 ppm of chlorine at the extreme end of the system at the end of the retention period. All valves in the system being sterilized shall be opened and closed several times during the contact period. The system shall then be flushed with clean water until the residual chlorine is reduced to less than 1.0 ppm. During the flushing period all valves and faucets shall be opened and closed several times.

C. Bacteriological Tests: The Contractor shall employ an approved agency to take test samples at several points of the system (i.e. end of each wing, each floor of building, etc.) in properly sterilized containers and arrange with the Health Department (or a test agency acceptable to the Health Department) having jurisdiction to test the samples. Test for coliform and other items as required by the AHJ. Should the samples not test satisfactory, the system shall be re-flushed and disinfected again until satisfactory samples are obtained.

D. Submittal: Submit documentation stating that flushing and disinfection has been

completed, copies of the bacteriological test results, and certification from the Health Department having jurisdiction stating that system has been found acceptable.

END OF SECTION

SECTION 22 11 23 – DOMESTIC WATER PUMPS

PART 1 GENERAL

1.1 RELATED DOCUMENTS

A. Drawings and general provisions of the Contract, including General and Supplementary Conditions and Division 00 and Division 01 Specification Sections, apply to this Section.

B. Requirements of Section 20 05 00 apply to this Section.

1.2 WORK INCLUDED

A. Wet Rotor Circulators

1.3 SUBMITTALS

A. General: All submittals shall comply with Section 20 05 00.

B. Product Data: Provide product information and performance data for all pumps.

C. Performance Data: Submit performance data, including pump curves, showing pump performance as head vs. GPM, BHP and NPSH vs. GPM, with system operating point clearly marked. (NPSH vs. GPM not required for pumps 1 HP and less.)

1.4 QUALITY CONTROL

A. Manufacturer: Manufacturer shall be IS0-9001 approved.

B. General: Provide quality assurance checks specified in Section 20 05 00 prior to ordering materials.

PART 2 PRODUCTS

2.1 ACCEPTABLE MANUFACTURERS

A. Products shall comply with Section 20 05 00, Paragraph 2.1, Acceptable Manufacturers.

B. Wet Rotor Circulators: Bell & Gossett, Armstrong, Grundfos, Taco.

2.2 GENERAL

A. Balancing: All rotating parts shall have been statically and dynamically balanced at the factory.

B. Alignment: Pump and motors shall be factory aligned, and have alignment checked and reset once installed in place.

C. RPM: Pumps and motors shall operate at maximum of 1750 rpm unless indicated otherwise.

D. Pump Capacity: Shall be no less than the values listed on the Mechanical Equipment Schedule on the drawings.

E. Pump Types: The type of each pump is indicated on the Mechanical Equipment Schedule under the "Type" column, and corresponds to the types specified herein.

F. Motors: Shall comply with Section 20 05 00. Motors shall be of sufficient size so as to be non-overloading at any point on the operating curve and shall be no smaller than the size shown on the drawings. Motors shall be of drip-proof construction (unless indicated otherwise), resilient mounted with oil lubricated journal or ball bearings, and have built-in thermal overload protectors. Motors shall be for use with the voltage and phase as scheduled on the drawings.

G. Domestic Water Applications: Pumps used on domestic water systems shall be of all-bronze construction, and NSF certified for domestic water use.

H. Testing: All pumps shall be factory tested per the Hydraulic Institute standards and be thoroughly cleaned.

I. Finish: Pumps shall have minimum one coat high grade machinery enamel finish, factory applied, manufacturer's standard color.

J. Nameplate: Pumps shall have stamped metal nameplates identifying: manufacturer, model number, capacity (gpm and head), and date of manufacturer.

2.3 WET ROTOR CIRCULATORS

A. Type: Centrifugal, single stage, in-line wet rotor pump for domestic water circulation. Bell & Gossett Series NBF, SSF (or approved).

B. Operating Range: Pump shall be rated for continuous operation at 150 psi working pressure and 225 deg F.

C. Construction: Bronze or stainless steel body, carbon bearings lubricated by circulating fluid, noryl or polypropylene or stainless steel impeller, ceramic or stainless steel shaft. Pump shall require no coupling or shaft seal for proper operation.

D. Accessories:

1. Automatic Timer Kit: 24 hour timer to control pump on/off based on preset times.

2. Aquastat: Strap-on type, to control pump on/off based on system hot water return temperature. Set to turn pump on at 100 deg F and off at 120 deg F.

PART 3 EXECUTION

3.1 INSTALLATION

A. General: Install pumps at locations shown on the drawings and in accordance with manufacturers instructions. Locate for ease of access.

B. Connections: Decrease from line size to pump inlet size with long radius reducing elbows and minimum 5-pipe diameter straight pipe into pump. Where reducers (in the horizontal) are used on pumps, they shall be the eccentric type installed with taper on the bottom.

C. Provide suction diffusers where indicated on the plans.

D. Provide flexible connectors in piping to base mounted pumps.

E. Check motor alignment after pump installation, re-align as necessary.

F. Grout in base of base mounted pumps after pumps have been set.

G. Start-Up: Check pump operation to ensure that pump operates with correct sequence, that specified flows are provided and that no unused conditions exist (i.e.) motor overloading or pump cavitation. Notify the Architect/Engineer of any unusual conditions or performance other than as specified.

END OF SECTION

SECTION 22 13 00 – FACILITY SANITARY SEWERAGE

PART 1 GENERAL

1.1 RELATED DOCUMENTS

A. Drawings and general provisions of the Contract, including General and Supplementary Conditions and Division 00 and Division 01 Specification Sections, apply to this Section.

B. Requirements of Section 20 05 00 apply to this Section.

1.2 WORK INCLUDED

A. Soil, Waste and Vent Piping

B. Condensate, Overflow, Miscellaneous Drains

C. Cleanouts

D. Grease Interceptor

E. Grease Trap

F. Dilution Tank

G. Oil/Water Separator

H. Trench Drains

I. Testing and Inspection

J. Accessories

1.3 SUBMITTALS

A. General: Submittals shall comply with Section 20 05 00.

B. Product Data: Submit product information on all items to be used.

1.4 REFERENCES

A. ASME B 16.4: Gray Iron Threaded Fittings.

B. ASME B 16.12: Cast Iron Threaded Drainage Fittings.

C. ASME B 16.15: Cast Bronze Threaded Fitting Classes 125 and 250.

D. ASME B 16.18: Cast Copper Alloy Solder Joint Pressure Fittings.

E. ASME B 16.22: Wrought Copper and Copper Alloy Solder Joint Pressure Fittings.

F. ASME B 16.23: Cast Copper Alloy Solder Drainage Fittings.

G. ASME B 16.29: Wrought Copper and Wrought Copper Alloy Solder Joint Drainage Fittings (DWV).

H. ASTM A 53: Pipe, Steel, Black and Hot-Dipped, Zinc-Coated, Welded and Seamless.

I. ASTM A 74: Cast Iron Soil Pipe and Fittings.

J. ASTM A 888: Hubless Cast Iron Soil Pipe and Fittings for Sanitary and Storm Drain, Waste, and Vent Piping Applications.

K. ASTM B 32: Solder Metal.

L. ASTM B 88: Seamless Copper Water Tube.

M. ASTM B 306: Copper Drainage Tube (DWV).

N. ASTM C 564: Rubber Gaskets for Cast Iron Soil Pipe and Fittings.

O. ASTM C 1277: Shielded Couplings Joining Hubless Cast Iron Soil Pipe and Fittings.

P. ASTM D 1785: Poly(Vinyl Chloride) (PVC) Plastic Pipe, Schedules 40, 80, and 120.

Q. ASTM D 2235: Solvent Cement for Acrylonitrile-Butadiene-Styrene (ABS) Plastic Pipe and Fittings.

R. ASTM D 2321: Standard Practice for Underground Installation of Thermoplastic Pipe for Sewers and Other Gravity-Flow Applications.

S. ASTM D 2447: Polyethylene (PE) Plastic Pipe, Schedules 40 and 80, Based on Outside Diameter.

T. ASTM D 2466: Poly(Vinyl Chloride) (PVC) Plastic Pipe Fittings, Schedule 40.

U. ASTM D 2564: Solvent Cements for Poly(Vinyl Chloride) (PVC) Plastic Piping Systems.

V. ASTM D 2657: Heat Fusion Joining or Polyolefin Pipe and Fittings.

W. ASTM D 2661: Acrylonitrile-Butadiene-Styrene (ABS) Schedule 40 Plastic Drain, Waste, and Vent Pipe and Fittings.

X. ASTM D 2665: Poly(Vinyl Chloride) (PVC) Plastic Drain, Waste, and Vent Pipe and Fittings.

Y. ASTM D 2751: Acrylonitrile-Butadiene-Styrene (ABS) Sewer Pipe and Fittings.

Z. ASTM D 2843: Density of Smoke from the Burning or Decomposition of Plastics.

AA. ASTM D 3034: Type PSM Poly(Vinyl Chloride) (PVC) Sewer Pipe and Fittings.

BB. ASTM D 3212: Joints for Drains and Sewer Plastic Pipes Using Flexible Elastomeric Seals.

CC. ASTM D 3311: Drain, Waste, and Vent (DWV) Plastic Fittings Patterns.

DD. ASTM D 4101: Polypropylene Injection and Extrusion Materials.

EE. ASTM F 477: Elastomeric Seals (Gaskets) for Joining Plastic Pipe.

FF. ASTM F 1412: Polyolefin Pipe and Fittings for Corrosive Waste Drainage Systems.

GG. AWWA C509: Resilient-Seated Gate Valves for Water Supply Service.

HH. AWWA C515: Standard for Reduced-Wall, Resilient-Seated Gate Valves for Water Supply Service.

II. CISPI 301: Hubless Iron Soil Pipe and Fittings for Sanitary and Drain, Waste, and Vent Piping Applications.

JJ. CISPI 310: Coupling for Use in Connection with Hubless Cast Iron Soil Pipe and for Sanitary and Storm Drain, Waste, and Vent Piping Applications.

PART 2 PRODUCTS

2.1 ACCEPTABLE MANUFACTURERS

A. Products shall comply with Section 20 05 00, 2.1, Acceptable Manufacturers.

B. Pipe and Fittings: Mueller, Cerro, Tyler, Charlotte Pipe and Foundry, AB & I Foundry, Spears Manufacturing, Cresline Northwest.

C. Pipe and Fittings - Acid Resistant Applications: Enfield, Orion, Georg Fisher.

D. No Hub Couplings: ANACO, Mission Rubber, Tyler, MG Coupling, Fernco, Clamp-All, Mifab.

E. Cleanouts: Josam, Zurn, J.R. Smith, Wade.

2.2 PIPE AND FITTINGS - MATERIALS

A. No-Hub Cast Iron Pipe and Fittings:

1. Pipe and Fittings: Service weight no-hub cast iron pipe and cast iron fittings, per CISPI 301 and ASTM A 888, for use with mechanical no-hub couplings.

2. Couplings: Per CISPI 310 or ASTM C 1277, with a cast iron or stainless shield, and neoprene gasket per ASTM C 564.

3. Heavy Duty Couplings:

a. Heavy duty clamp type coupling, with stainless steel shield minimum 0.015-inch thick, stainless steel clamps, stainless steel screws minimum 0.375-inch nominal diameter, gasket per ASTM C 564, and minimum 4 clamps each coupling. ANACO Husky SD 4000.

b. Heavy duty cast iron constructed clamp, two piece, with stainless nuts/bolts, neoprene gasket per ASTM C 564. MG Piping Products “MG Coupling”.

B. Hub and Spigot Cast Iron Pipe and Fittings: Service weight hub and spigot cast iron pipe and cast iron fittings per ASTM A 74, for use with compression gaskets. Gaskets shall conform to ASTM C 564.

C. Copper DWV Pipe and Fittings: Copper drainage tube per ASTM B 306. Wrought copper and wrought copper alloy solder joint fittings per ASME B 16.29; or cast copper alloy solder joint fittings per ASME B 16.23.

D. Galvanized Steel DWV Pipe and Fittings: Schedule 40 galvanized steel pipe per ASTM A 53, Grade B, Type 5. Cast iron drainage fittings, threaded, per ASME B 16.12; and cast iron screwed fittings per ASME B 16.4.

E. Polypropylene Pipe and Fittings: Polypropylene acid resistant and flame retardant pipe manufactured from resins conforming to ASTM D 4101, and conforming to dimensional tolerance of ASTM D 2447. Smoke density rating shall be less than 50%when tested per ASTM D 2843. Fittings shall conform to ASTM F 1412, with mechanically coupled joints or socket fusion joints. Mechanical couplings shall have 300 series stainless steel outer bands, and cadmium plated steel bolts and nuts. Socket fusion joints shall conform to ASTM D 2657.

F. Copper Pipe and Fittings: Seamless copper water tube, tube L or M, per ASTM B 88. Solder joint wrought copper and bronze fittings per ASME B 16.22 cast

copper alloy fittings per ASME B 16.18, and cast bronze threaded fittings per ASME B 16.15 with 95/5 tin-antimony solder per ASTM B 32.

G. PVC Pipe and Fittings: Polyvinyl chloride pipe, schedule 40, per ASTM D 1785. Polyvinyl chloride solvent cement socket type fittings conforming to ASTM D 2466. Solvent cement shall comply with ASTM D 2564.

H. ABS DWV Pipe and Fittings: Acrylonitrile-butadiene-styrene plastic drain pipe, solid wall pipe per ASTM D 2661 with solvent cement joints. Foam (i.e. cellular) core pipe NOT allowed. Acrylonitrile-butadiene-styrene DWV fittings conforming to ASTM D 2661 or ASTM D 3311. Solvent cement shall comply with ASTM D 2235.

2.3 PIPE AND FITTINGS – APPLICATION

A. Waste and Vent:

1. Piping 2-1/2 Inches and Smaller Located Above Ground: Galvanized steel DWV, no-hub cast iron, copper DWV, PVC DWV, or ABS DWV.
2. Piping 3 Inches and Larger Located Above Ground: No-hub cast iron, bell and spigot cast iron, copper DWV.
3. All Piping Located Below Ground: No-hub cast iron, bell and spigot cast iron, copper DWV, PVC DWV, or ABS DWV.
4. High Temperature: Waste piping serving fixtures that may receive waste greater than 120 degree F. shall be no-hub cast iron, bell and spigot cast iron, or copper DWV for minimum 40 feet downstream of fixture (i.e. dishwasher, three compartment sink, drains/receptors serving water heater and boiler, and similar items).
5. Piping Exposed to Temperatures Above 130 deg F: Galvanized steel DWV or no-hub cast iron.
6. No-Hub Couplings: Couplings on below ground piping shall be the heavy duty type.

B. Cooling Condensate Drains: Copper DWV, copper, PVC DWV, or PVC.

C. Miscellaneous Drains: Copper DWV, copper, PVC DWV, or PVC; except that for corrosive fluids (or corrosive fluid venting) applications use the same materials as specified for the acid waste (or vent) systems, or use PVC.

D. Piping Exposed in Finished Areas: Chrome or nickel plated brass; piping 2 inches and larger may be provided with chrome or nickel plated brass sleeves to conceal pipe and fittings.

2.4 CLEANOUTS

A. General:

1. All cleanouts shall have cast iron bodies with bronze countersunk rectangular slotted plugs, lubricated with a non-hardening teflon base thread lubricant and having a gasket seal.
2. Cleanouts located in waterproof membrane floors shall be provided with an integral cast flange and flashing device.
3. All cleanouts shall be the same size as the pipe which they are intended to

serve (but not larger than 4-inch).

4. Pipe fittings for cleanouts which turn through walls or up through floors shall use long sweep ells or a "Y" and 1/8 bend.
5. All cleanouts and access covers shall be provided with vandal proof screws.

B. Floor Cleanouts:

1. Areas With Floor Tile (or Linoleum): J.R. Smith No. 4140 Series adjustable floor cleanout with round heavy duty nickel bronze top with tile recess.
2. Areas With Bare Concrete Floors: J.R. Smith No. 4100 Series adjustable floor cleanout with round heavy duty nickel bronze top.

C. Wall Cleanouts: Cast iron ferrule with cast bronze taper threaded plug, with plug tapped 1/4-inch, 20 thread, to accept access cover screw; with stainless steel access cover and vandal proof screw.

D. Outside Cleanouts: Heavy duty, round, cast iron, double-flanged housing, having scoriated cast iron cover with lifting device, ferrule and bronze closure plug. Housing and lid shall be galvanized and have vandal resistant screws. J.R. Smith No. 4251 or 4256 Series.

2.5 ACCESSORIES

A. Vent Flashing:

1. General: Style and type to suit roofing system, match vent pipe size, and provide waterproof building penetration. Provide with adequate base size for proper flashing into roof system.
2. EPDM or compression molded rubber; suitable for temperatures from -60 deg F to 270 deg F; resistant to ozone and UV light. Flashing shall have aluminum or galvanized steel base for flashing or attachment to roof (style to suit roof type). Provide stainless steel clamp.
3. 2.5 lb sheet lead, extending as a sleeve all around vent pipe with base extended out minimum 10 inches all around; top counter-flashing overlap 2" and turned down inside vent pipe.

B. PVC and ABS Expansion Coupling: Coupling constructed of PVC and rubber for use in PVC and ABS piping to accommodate up to 0.75-inch expansion/contraction; held in place with stainless steel bands; shall comply with ICC and IAPMO standards. ProVent “Ez Flex”.

C. Vent Caps: Galvanized cast iron vandal proof vent cap, with concealed allen key set screw. J.R. Smith Figure 1748 (or approved).

D. Pit Backwater Valve: Cast iron body with bronze backwater valve and galvanized cast iron grate to prevent backflow into pit. J.R. Smith Figure 7000 (or approved).

E. Clothes Washer Lint Filter: Filtrol 160 re-usable, incline washing machine lint filter with hoses, clamps, fittings, mounting bracket, and all accessories necessary for installation. Provide unit with 2 spare filter bags.

2.6 VALVES

A. Valve: Resilient seated, non-rising stem gate valve, rated for 250 psi cold water

working pressure, and conforming to AWWA C509/C515 and suitable for direct burial. Constructed of cast or ductile iron body and bonnet, bronze or stainless steel stem, multiple o-ring stem seals, gate encapsulated in synthetic rubber, with standard 2-inch operating nut and fusion bonded epoxy coating (minimum 5 mil) inside and out. End connections shall be Class 125 flanges or mechanical joint type, as required to best suit the application. Valves shall have an unobstructed waterway equal to or greater than the full nominal diameter of the valve. Furnish with operating extension and operating wrench.

B. Valve Box: Cast iron access box, rated for highway H2O loading, adjustable type with flanged top section and flared base. Style to suit valve used with and depth, and as acceptable to local code officials. Valve box cover shall be cast with words "SEWER".

PART 3 EXECUTION

3.1 GENERAL

A. Installation of all items shall comply with code, best professional practices, manufacturers written installation instructions, and to allow for proper functioning of items being connected to.

B. Provide all piping as indicated and as required to allow complete and proper waste, drain, and vent connections to each fixture and equipment item requiring connection. Provide offsets as required to accommodate building construction and access requirements per Section 20 05 00. For multistory buildings include costs to offset vertical piping through each floor level since structural member locations will not be the same on each floor.

C. Coordinate installation of items with all trades that are affected by the work to avoid conflicts.

D. The work of this section shall include all waste (sanitary sewer), drain, and vent lines inside of the building and 5-feet outside of the building (unless indicated otherwise), to the point of and including connections to outside sanitary sewer lines or sanitary sewer manholes.

E. Consult manufacturers data and architectural drawings for information on plumbing fixtures before beginning rough-in.

F. Verify points of connection, invert elevations, and grade requirements before beginning installation or ordering materials.

G. Stub all piping for all items requiring connections through wall or floor; cap and protect until connection to items is complete.

H. Vents extending through roof shall terminate at least 10 inches above roofing; and not less than 10 feet from and 3 feet above any building opening. Provide vent flashing at each vent through roof; utilize water-proof method as required to best suit roofing material and roofing system manufacturer.

I. Trap all fixtures and equipment items as required by governing code; provide proper venting for each trap.

J. Provide drain piping for all drip pans, unit condensate drains, unit P-traps, etc. Run piping to nearest point of drainage, or as shown on drawings. Where routing

is not shown, route to nearest point of proper drainage.

K. Provide piping connections to equipment furnished by others in accordance with Section 20 05 00.

L. All excavation, trenching and backfilling shall comply with code and pipe manufacturers recommendations. Below ground plastic pipe installation shall comply with ASTM D 2321 and shall exceed those standards as specified.

3.2 PIPE AND FITTINGS

A. All piping in finished areas shall be installed concealed unless specifically noted otherwise.

B. Install piping so as not to obstruct access to any items requiring routine service, maintenance, or inspection. Offset or reroute piping as required to clear any interferences which may occur. Prior to running any piping, confirm with Architect/Engineer (unless is clearly noted to be ran exposed). Install exposed piping so as not to obstruct any portion of windows, doors, doorways, passageways, or items requiring service or access.

C. Consult all drawings for location of pipe spaces, ducts, electrical equipment, structural elements, ceiling heights, door items requiring access, openings, window openings, and other details and report discrepancies or possible conflicts to Architect/Engineer before installing pipe.

D. Install all horizontal soil or waste lines with a slope of 1/4-inch per foot unless noted otherwise. Coordinate with AHJ if written approval is required for exceptions to 1/4-inch per foot slope.

E. Make all changes of direction and junctions with Y fittings and 1/8 bends; use sanitary tee fittings in vertical pipe only.

F. Provide escutcheons where exposed pipe passes through walls, floors, or ceilings.

G. Install all piping parallel to the closest wall and in a neat, workmanlike manner. Horizontal straight runs of piping shall not deviate from straight by more than 1/4-inch in ten feet. Vertical piping shall not deviate from plumb by more than 1/8-inch in ten feet.

H. Do not run any piping above electrical panels (and similar electrical equipment). Provide offsets around such panels as necessary. Such offsets are typically not shown on the plans, but are required per this paragraph.

I. Prior to the joining of any section of pipe to a pipe run, the section shall be thoroughly cleaned inside and out, the ends shall be reamed to remove any cutting burrs and piping prepared as recommended by piping and fitting manufacturer.

J. Threaded Connections: Cut piping carefully, ream, thread and work into place without springing. Use TFE tape or lead and graphite lubricant (on male threads only).

K. Soldered Connections: Polish contact surfaces of fittings and pipes with emery cloth before fluxing male and female surfaces of joints. Steel wool and sandpaper not permitted for polishing.

L. PVC and ABS Pipe:

1. Solvent Joints: The outside of the PVC pipe shall be chamfered to a minimum of 1/16-inch at approximately 22 degrees. Chemicals used must penetrate the surface of both pipe and fitting which will result in complete fusion at the joint. Use solvent and cement only as recommended by the pipe manufacturer.
2. Plastic to Metal Connections: Work the metal connection first. Use a non-hardening compound on threaded connections. Use only light wrench pressure. Connections between metal and plastic are to be threaded utilizing female threaded adapters only, not male adapters.
3. Expansion/Contraction: Provide offsets and expansion couplings to accommodate system expansion/contraction and for changes in building due to building shrinkage or other shifts. For wood framed construction of four stories or more; provide expansion couplings at each floor in waste and vent pipe risers.

3.3 INSTALLATION OF CLEANOUTS

A. General: Install cleanouts in all soil and waste piping:

1. As shown on drawings.
2. At no more than 100 foot intervals on horizontal runs (whether shown on drawings or not).
3. At the end of all piping runs.
4. At the base of all vertical risers.
5. At all changes of direction for a run of 10 feet or over.
6. Where needed to correct possible stoppage.
7. As required by Code.

B. Elevations:

1. Floor cleanouts shall be installed so as to be flush with the finished floor; where recessed cleanout covers are used the recess shall be filled flush with material to match the surrounding finished floor.
2. Wall cleanouts in finished areas shall all be installed at the same height for a uniform appearance throughout the facility. Heights shall be selected so as not to interfere with base molding or other trim work; verify with other trades.

C. Clearances and Access: Install cleanouts so as to assure proper clearances as required by governing code. Where cleanouts occur in concealed spaces provided extensions to floors above or to walls to allow access. Provide wall access covers or access doors for all wall cleanouts. See Section 20 05 19 for access doors.

D. Outside Building: All cleanouts located outside shall be provided with an access housing located in a 24" x 24" x 6" thick concrete pad, flush with (or up to 1/4” above) the adjacent finished grade. The pipe and cleanout shall be independent of this access housing and pad.

3.4 TESTING AND INSPECTION

A. All piping shall be tested, inspected and approved prior to being concealed or

covered.

B. Testing shall be by water or air, and comply with code.

C. Testing shall be witnessed by the code official, the Owner's representative (at their option), and the Engineer (at their option). Prior to beginning testing confirm with the Owner and Engineer their level of involvement in the testing process and extent of witnessing; where they will be witnessing the testing notify them at least 72 hours in advance of the test and confirm their availability; coordinate and reschedule as necessary and arrange mutually agreed upon times for the tests and witnessing to occur.

D. Water Testing:

1. Fill system with water so that there is no less than 10 feet of head above the highest system section being tested.
2. System shall hold pressure for a period of at least 15 minutes with no leakage before the inspection starts.
3. The system shall be inspected and shall hold tight with no leakage at all points.

E. Air Testing:

1. Pressurize system with air so that there is no less than 5 psig of air pressure in the system.
2. System shall hold pressure for a period of at least 15 minutes without the introduction of additional air before the inspection starts.
3. The system shall be inspected and shall hold tight with no leakage at all points.

F. All leaks shall be eliminated and the system re-tested before proceeding with work or concealing pipe.

G. All repairs to piping shall be with new material and no caulking of screwed joints or holes is allowed.

END OF SECTION

SECTION 22 16 00 – FACILITY NATURAL GAS PIPING SYSTEM

PART 1 GENERAL

1.1 RELATED DOCUMENTS

A. Drawings and general provisions of the Contract, including General and Supplementary Conditions and Division 00 and Division 01 Specification Sections, apply to this Section.

B. Requirements of Section 20 05 00 apply to this Section.

1.2 WORK INCLUDED

A. Natural Gas Piping

B. Natural Gas Valves

C. Natural Gas Regulators

D. Natural Gas Accessories

E. Coordination with Gas Utility

1.3 SUBMITTALS

A. General: Provide submittals in accordance with Section 20 05 00.

B. Product Data: Submit manufacturer's product data for all items to be used.

1.4 REFERENCES

A. ANSI/ASCE 25-06: Earthquake Activated Gas Shut-off Devices.

B. ASME B 6.5: Steel Pipe Flanges and Flanged Fittings.

C. ASME B16.9: Steel Butt - Welding Fittings.

D. ASME B16.11: Forged Steel Fittings, Socket Welding and Threaded.

E. ASTM A53: Pipe, Steel, Black and Hot Dipped, Zinc Coated, Welded and Seamless.

F. ASTM A105: Carbon Steel Forgings for Piping Applications.

G. ASTM A234: Piping Fittings of Wrought Carbon Steel and Alloy Steel for Moderate and High Temperature Service.

H. ASTM B88: Seamless Copper Water Tube.

I. ASTM B280: Seamless Copper Tube for Air Conditioning and Refrigeration Field Service.

J. ASTM D2513: Thermoplastic Gas Pressure Pipe, Tubing, and Fittings.

K. ASTM D3261: Butt Heat Fusion Polyethylene (PE) Plastic Fittings for Polyethylene (PE) Plastic Pipe and Tubing.

L. ASTM D3350: Standard Specification for Polyethylene Plastics Pipe and Fittings Materials.

M. IFGC: International Fuel Gas Code.

PART 2 PRODUCTS

2.1 ACCEPTABLE MANUFACTURERS

A. General: Products shall comply with Section 20 05 00. See Section 20 05 00, paragraph 2.1 for Acceptable Manufacturer requirements.

B. Pipe and Fittings: US Steel, Anvil International, Wheatland Tube, Weldbend, Exltube.

C. Pipe and Fittings - Belowground: Performance Pipe, KWH Pipe, Perfection Corporation, Continental Industries.

D. Valves: Milwaukee, Flowserve (Nordstrom), Stockham, Conbraco/Apollo, Nibco, Resun, ASCO.

E. Regulators: Fisher, American Meter, Equimeter.

F. Vent Caps: Clay & Bailey, OPW, Morrison, Beckett.

2.2 PIPE AND FITTINGS - ABOVEGROUND

A. Pipe: Black steel pipe conforming to ASTM A 53, Grade A or B, Type E or S. Schedule 40 unless indicated otherwise.

B. Fittings:

1. 2 Inches and Smaller - Exposed: Black malleable iron threaded type, Class 150 conforming to ASME B 16.3 and ASTM A 234.
2. 2 Inches and Smaller - Concealed: Steel butt weld type, conforming to ASTM A 234, ASME B 16.9; or steel socket weld type, conforming to ASTM A 105 and ASME B 16.11.
3. 2-1/2 Inches and Larger: Steel butt weld type, conforming to ASTM A 234, ASME B 16.9; or steel socket weld type, conforming to ASTM A 105 and ASME B 16.11.
4. Flanges: Steel socket or welding neck type, Class 150, conforming to ASME B 16.5.

C. Vent Pipe: Same as gas piping; except where routed exposed in mechanical rooms, may be hand drawn or annealed seamless copper conforming to ASTM B 280 or UNS number C12200 copper conforming to ASTM B 88, with wrought copper fittings, bronze fittings, and soldered joints.

2.3 PIPE AND FITTINGS - UNDERGROUND

A. Pipe: Polyethylene pipe specifically designed and intended for fuel gas piping distribution systems, conforming to the Plastic Pipe Institute standards for such pipe. Minimum cell classification of PE234373E or PE234375E, as defined in ASTM D 3350. Conforming to ASTM D 2513, with a hydrostatic design basis of minimum 1250 psi at a temperature of 73 degree F. Piping shall be manufactured, tested, and marked in accordance with ASTM D 2513. Performance Pipe “DriscoPlex 6500” (or approved).

B. Fittings: Butt fusion type, manufactured of same material as pipe, conforming to ASTM D 3261.

C. Anodeless Riser: Factory fabricated gas riser fitting for connecting underground piping to aboveground piping, conforming to IFGC requirements. Inner polyethylene gas carrying pipe and outer Schedule 40 steel pipe per ASTM A53

coated with gray epoxy finish. Piping shall comply with pipe specified in this specification section. Inlet shall have butt end connection with coupling to transition to underground piping; outlet shall have threaded, welded or flanged connection (to suit aboveground items being connected to). Inner pipe size shall be same size as underground piping connected to; vertical rise length to suit installation requirements.

2.4 VALVES

A. General: Valves shall be designed for use on natural gas system and suitable for the pressures and temperatures to be encountered. Valves shall be UL listed (or CSA certified) for fuel gas use.

B. Ball Valves: Bronze body, two piece body, blowout proof stem, full port, reinforced TFE seats, chrome plated brass ball, threaded connections, UL listed for LP gas and natural gas shut-off, 250 psi non-shock LP or natural gas working pressure. Nibco T-585-70-UL (or approved).

C. Plug Valves: Lubricated, wrench operated, regular pattern full port type plug valve. Gray iron body and plug per ASTM A 126, Class B. Rated for minimum 175 psi wog. Valves shall have a sealing and lubrication system for maintaining valve seals and operation. Valve shall be factory serviced with manufacturers recommended sealant suitable for the valve application. Valves 2 inch and smaller shall have threaded end connections; larger valves shall have flanged connections. Provide one standard lever type hand wrench for each valve. Resun Figure D-125, D-126 (or approved).

D. Seismic Valves: Automatic shut-off valve in a seismic event. Valve shall conform to ANSI/ASCE 25-06. Valve shall have visual indicator of open or closed status, and require manual reset. Valve shall be same size (or larger) as line installed in.

2.5 ACCESSORIES

A. Piping Specialties: See Section 20 05 19.

B. Pressure Regulator: Cast iron body, die cast aluminum alloy diaphragm case, Buna-N diaphragm disc, 125 psi maximum pressure rating with over pressure positive tight lock-up, internal relief valve, and gray polyester paint finish. Regulator shall be sized by manufacturer based on inlet pressure, desired outlet pressure, and flow requirements. Regulators with vent openings located within 20 feet of ventilation air intakes or where the venting of gas would be unsafe shall be equipped (and labeled for use with) a vent limiting device.

C. Vent Cap: T-style, constructed of aluminum or zinc coated cast iron, 30 mesh stainless steel screen. Morrison No. 155.

D. Flexible Connectors: See Section 20 05 19. Size flexible connectors to match pipe size shown on plan, with reducer after the flexible connector to match the equipment connection size.

PART 3 EXECUTION

3.1 GENERAL

A. General: Comply with Section 20 05 00. Install in accordance with manufacturer's written installation instructions, code, applicable standards and best construction practices.

B Complete System: Provide all piping as indicated and as required to allow connections to all equipment requiring gas connections, and to provide complete and operational gas piping systems.

C. Coordination: Coordinate installation of items with all trades that are affected by the work to avoid conflicts. Review all drawings for location of pipe spaces, ducts, electrical equipment, ceiling heights, door openings, window openings, and other details and report discrepancies or possible conflicts to Architect/Engineer before installing pipe.

3.2 PIPE AND FITTINGS

A. General:

1. All piping in finished areas shall be installed concealed unless specifically noted otherwise.
2. Install piping at such heights and in such a manner so as not to obstruct any portion of windows doorways, passageways, or access to any items requiring routine service, maintenance, or inspection. Offset or reroute piping as required to clear any interferences which may occur.
3. Install all piping parallel to the closest wall and in a neat, workmanlike manner. Horizontal exposed straight runs of piping shall not deviate from straight by more than 1/4-inch in ten feet. Vertical piping shall not deviate from plumb by more than 1/8-inch in ten feet.

B. Escutcheons: Provide escutcheons where exposed pipe passes through walls, floors, or ceilings.

C. Electrical Items: Do not run any piping above electrical panels (and similar electrical equipment). Provide offsets around such panels as necessary. Such offsets are typically not shown on the plans, and are required per this paragraph.

D. Joints: Prior to the joining of any section of pipe to a pipe run, the section shall be thoroughly cleaned inside and out, the ends shall be reamed to remove any cutting burrs and piping prepared as recommended by pipe and fitting manufacturer.

E. Threaded Connections: Cut piping carefully, ream, thread and work into place without springing. Use TFE tape or lead and graphite lubricant (on male threads only).

F. Welding: Shall conform to ASME B31.1 and ASME B31.9. Welders and welding operators shall be qualified as required by ASME B31.1, ASME B31.9, and governing code. Welded joints on piping system shall be continuous, without backing rings, and pipe ends beveled for butt weld connections. Gas cuts shall be square and free from burned material. Before welding, surfaces shall be thoroughly cleaned. Piping shall be carefully aligned, with no weld material projecting inside the pipe.

G. Unions: Install unions in pipe connections to equipment and other items where it may be necessary to disconnect the item from piping for repairs or maintenance;

and as indicated. Where flanged connections occur at equipment additional unions are not required unless indicated otherwise.

H. Equipment Drip Legs: Provide drip legs in pipe connections to all equipment. Drip legs shall be located downstream of equipment isolation valves, and upstream of unit flexible connectors or unions. Provide adequate clearance for removal of drip leg cap.

I. Regulators: Provide drip legs with removable caps upstream of all regulators; provide test tee with capped valve 10 pipe diameter downstream of all regulators.

J. Flexible Connectors: Provide flexible connectors in piping at connections to all equipment. Size flexible connectors to match pipe size shown on plan, with reducer after the flexible connector to match the equipment connection size.

K. Provide flexible connectors at crossing of building seismic or expansion joints. Install in a manner to allow for 1-inch movement in any direction.

L. Vents: Pipe regulator vent lines and all equipment gas train vents full size to outside of building; terminate with vent cap.

M. Outdoor Piping - Painting: All aboveground piping outside of building shall be cleaned and prime painted with one coat of a rust-inhibiting paint and a final coat of finish paint (color to match adjacent building color, unless noted otherwise).

3.3 VALVES AND ACCESSORIES

A. Type: Ball type; except that valves 3 inches and larger and main line shut-off valves shall be the plug type; and valves indicated to be a specific type shall be the type as indicated.

B. Applications: Provide isolation valves at piping connections to all equipment, at inlet of all pressure regulators, at inlet of all seismic shut-off valves, downstream of gas meters, at inlet to gas solenoid valves, and where indicated.

C. Seismic Valve: Provide seismic shut-off valve at building gas meter; locate downstream of meter and downstream of system isolation valve.

3.4 GAS SERVICE

A. Service Application: Coordinate with gas utility for gas service to building. Contact gas utility and complete all required service application forms and documentation. Coordinate with Owner for any required signatures or service agreement authority. Coordinate scheduling with the utility for timely service to allow proper equipment start-up and to comply with overall project schedule.

B. Gas Meter: Coordinate proper gas meter location with gas utility; location shown on plans is preliminary. Provide connection to outside utility gas meter, and gas piping from meter, up to and completely connected, to all equipment.

C. Service Charges: Owner will pay direct to the utility all utility charges for gas service to the building.

3.5 TESTING AND INSPECTION

A. General: All piping shall be tested, inspected, and approved by the AHJ prior to being concealed or covered.

B. Witnessing: Testing shall be witnessed by the AHJ and the Architect/Engineer (at his option). Notify Architect/Engineer minimum 72 hours prior to date of

testing, and mutually agree upon times arranged.

C. Testing:

1. Piping shall be inspected, purged and pressure tested in accordance with IFGC (except where more restrictive requirements are specified herein, the most restrictive shall prevail).
2. Test pressure shall be not less than 150 percent of the maximum to which the pipe will ordinarily be subjected; but in no case less than 50 psig.
3. Components that may be damaged by the test pressure shall be removed or isolated from the piping system during testing.
4. Portions of the system that are reconnected after system testing that could not be tested (e.g. low pressure equipment connections, separate portions of the system, etc.) shall be specifically tested with a non-corrosive leak detection fluid acceptable to the AHJ.
5. Any leaks or defective piping disclosed by testing and inspection shall be repaired with new materials and the system re-tested.

D. Documentation: Provide documentation to the Architect/Engineer indicating that the system has been completely pressure tested, and all portions inspected and accepted by the AHJ.

END OF SECTION

SECTION 22 33 00 – DOMESTIC WATER HEATERS

PART 1 GENERAL

1.1 RELATED DOCUMENTS

A. Drawings and general provisions of the Contract, including General and Supplementary Conditions and Division 00 and Division 01 Specification Sections, apply to this Section.

B. Requirements of Section 20 05 00 apply to this Section.

1.2 WORK INCLUDED

A. Water Heaters

B. Storage Tanks

C. Flues and Combustion Air

1.3 REFERENCES

A. Boiler Code: State of Washington Boilers and Unfired Pressure Vessel Laws, Chapter 70.79 RCW, Chapter 296-104 WAC.

B. NSF 61: Drinking Water System Components – Health Effects.

1.4 SUBMITTALS

A. Product Data: Submit manufacturer's product data for all items to be used.

B. Manufacturer's Instructions: Submit manufacturer's installation instructions for water heaters.

1.5 GENERAL REQUIREMENTS

A. NSF: Manufacturers shall fabricate and label equipment components that will be in contact with potable water per NSF 61.

B. Quality Assurance: Provide quality assurance checks specified in Section 20 05 00 prior to ordering products.

C. Code Compliance: Water heater efficiency and insulation levels shall comply with code. Provide water heater with accessories (i.e. heat traps, relief valves, etc.) as required by code.

D. Temperature Settings: Water heaters shall be able to be set at a leaving (or system) water temperature over a range. Low setting shall be at least 90 degrees F or 10 degrees F lower than the system water temperature indicated on the plans (whichever is lower). High setting shall be at least 10 degrees higher than the system water temperature indicated on the plans.

PART 2 PRODUCTS

2.1 ACCEPTABLE MANUFACTURERS

A. Products shall comply with Section 20 05 00, Paragraph 2.1, Acceptable Manufacturers.

B. Water Heaters – Tank Type: A. O. Smith, Rheem, Bradford-White, State, PVI.

C. Water Heaters – Electric Instantaneous: Chronomite, Stiebel Eltron.

2.2 WATER HEATERS – ELECTRIC INSTANTANEOUS

A. Type: Electric, point-of-use instantaneous type heater.

B. Construction: Stainless steel or nichrome heating elements, celcon or copper or stainless steel waterways, with plastic (or steel) enclosure. Unit shall be UL listed and meet all applicable codes.

C. Capacity: Shall have capacity as indicated on the plans. Unit shall be for use with 110 deg F outlet temperature (unless noted otherwise), flow rates from 0.5 to 3.0 gpm, and operate with as low as 25 psig inlet water pressure.

2.3 WATER HEATERS – GAS FIRED TANK TYPE

A. Type: High efficiency condensing natural gas fired domestic hot water heater, ASME labeled. A.O. Smith “Cyclone” (or approved).

B. Capacity: Shall have capacity and efficiency (minimum 95%) as indicated on the drawings; rated in accordance with recognized standards.

C. Tank and Insulation: Steel tank, ASME constructed and labeled, rated for 160 psi working pressure, with glass lining applied to all water side surfaces after full tank assembly and welding. Tank shall have at least one handhole cleanout. Tank shall be insulated with foam to comply with local code requirements and no less than ASHRAE 90.1 (latest edition) for insulating rating and tank heat loss. Tank and insulation shall be fully enclosed within a steel enclosure having a baked-on enamel finish with access provided to unit components.

D. Clearance: Approved for 0-inch clearance to combustibles.

E. Cathodic Protection: Tank shall be protected from corrosion with powered anodes. System shall be selected by the manufacturer to suit typical water conditions at the general installation location and provide protection for the tank warranty periods.

F. Electrical and Controls: Water heater(s) shall be equipped with a solid state temperature and ignition control system with integral diagnostics, LED fault display capability and a digital display of temperature settings. Heater(s) shall be provided with an automatic gas shutoff device and safety shutoff if flame is extinguished. Heater shall have controls to allow setting the hot water temperature over a range, and be able to maintain temperature plus or minus 2 degrees F of setpoint.

G. Burner and Venting: Burner shall be down-fired power draft type, designed for burning natural gas with specified efficiency and capacity requiring no special calibration on start-up. Shall be able to have products of combustion direct vented to the outside using CPVC or ABS pipe. Unit shall allow combustion air from the room or piped with CPVC or ABS pipe to the outside; and be for use with concentric type vents.

H. Accessories:

1. ASME pressure and temperature relief valve, and tank drain valve.
2. Condensate Neutralizer: Limestone (or manufacturer’s recommended material) filled container for neutralizing acidic condensate from water heaters

and water heater flues.

I. Warranty: Tank shall have a 3 year warranty against corrosion and tank failure.

J Water Heater Venting:

1. General: Materials shall comply with manufacturer and recommendations and code.
2. Combustion Venting: CPVC with solvent joints.
3. Outdoor Air Venting: CPVC or PVC with solvent joints.
4. Concentric Vent: Water heater manufacturer's concentric vent kit, sized and designed to suit water heater used with; with inner vent pipe, outer combustion air pipe, weather proof cap, and roof jack/flashing to suit roof type used with.

PART 3 EXECUTION

3.1 INSTALLATION

A. General: Comply with Section 20 05 00. In accordance with manufacturer's written installation instructions, code, applicable standards, and best construction practices.

B. Coordination: Coordinate the work with all trades that may be affected by the work to avoid conflicts and to allow for an organized and efficient installation of all systems.

C. Connections: Connect and install all items shipped loose with equipment and as needed for proper system operation. Provide and connect all utilities and services to equipment as required for proper equipment and system operation.

D. Protection, Operation and Maintenance: Comply with Section 20 05 00. Protect water heaters against use and damage during construction; provide guards and/or boxing as required.

E. Relief Valves: Pipe all pressure relief valves to proper point of drainage.

F. Vacuum Breakers: Provide vacuum breakers on water heaters where water heaters serve fixtures located below the water heater height.

G. Clearances: Provide as required for maintenance or as required by Code; whichever is greater. Water heater sizes exceeding any of the following shall have minimum 18" clearance all around (or as required by Boiler Code for boilers; whichever is greater): 120 gallons, 160 psi, or 200,000 BTU/hr input.

H. Anchorage: Provide seismic strapping and anchorage of water heater to building structure.

I. Inspection: Inspect water heaters and connecting systems to confirm water heaters and system are ready for start-up and operation. As a minimum, check for: proper voltage and phase, correct gas pressure and regulator setting (for gas fired units), correct electrical connections, complete control connections, relief valve correctly sized and discharge piped, drain provisions installed, valving to water heater accessible and ready to be set in operating positions, and other items as listed by the manufacturer are properly provided and connected.

J. Start-Up and Adjustment: Put water heater into service following manufacturer start-up procedures. Adjust water heaters for proper operation; set thermostats for required supply temperature. Check operation of water heater by flowing water and confirming proper operation.

END OF SECTION

SECTION 22 40 00 – PLUMBING FIXTURES

PART 1 GENERAL

1.1 RELATED DOCUMENTS

A. Drawings and general provisions of the Contract, including General and Supplementary Conditions and Division 00 and Division 01 Specification Sections, apply to this Section.

B. Requirements of Section 20 05 00 apply to this Section.

1.2 WORK INCLUDED

A. Plumbing Fixtures and Trim

B. Installation/Connection of Equipment Specified Elsewhere

C. Adjustment and Cleaning

1.3 DEFINITIONS

A. "Plumbing Brass" means "P-traps, stops, strainers, tailpieces, flanges, and other brass fittings and accessories NOT including faucets or stops."

B. "Trim" includes all plumbing brass items, faucets, and any fixture accessories.

C. "Accessible" refers to the American's with Disabilities Act, and infers that these fixtures will meet Federal and local code requirements.

D. "Lead-Free" means not containing more than 0.2% lead in solder and flux; and not more than a weighted average of 0.25% lead in wetted surfaces of pipes, pipe and plumbing fittings and fixtures.

1.4 REFERENCES

A. UPC: Uniform Plumbing Code.

B. NSF/ANSI Standard 61: Drinking Water System Components – Health Effects.

1.5 SUBMITTALS

A. General: All submittals shall comply with Section 20 05 00.

B. Product Data: Submit product data for all plumbing fixtures, plumbing trim, and water heaters.

1.6 GENERAL REQUIREMENTS

A. Fixture Quality: Provide new fixtures and fittings, approved, free from flaws and blemishes with finished surfaces clear, smooth and bright. Visible parts of fixture brass and accessories, and all items located in accessible cabinet spaces, shall be heavily chrome plated. All stops, P-traps and items exposed to view shall be chrome plated (except where specifically noted otherwise).

B. Code Compliance: All products and connections shall be in compliance with code, local Utilities Department standards, and Health Department requirements.

C. Off-The-Floor Mounted Fixtures - Movement:

1. General: Off-the-floor (i.e. wall) mounted fixtures shall be supported, anchored, and braced in a manner so that the fixture does not move more than the values indicated below with the imposed forces as indicated; nor

shall the fixture or associated fittings leak or suffer damage of any kind. Deflection shall be measured at the front most part of the fixture (i.e. the point on the fixture furthest away from the wall containing the fixture supports), with the load imposed at the same location as the measured deflection. Deflection shall not be exceeded in any direction with the force imposed in any direction.

2. Water Closets: 1/16-inch with a 300 pound force.
3. Other Fixtures: 1/16-inch with a 150 pound force.

D. Spare Parts: Provide two spare stop valves.

1.7 QUALITY ASSURANCE

A. General: Provide quality assurance checks specified in Section 20 05 00 prior to submitting product data. By submitting products for Engineer's review, the Contractor is confirming that such checks have been performed and that the products are suitable for the intended installation and use.

B. Fixtures:

1. Types: Verify specified fixture types with the Architectural and Plumbing drawings to confirm the requirements are consistent (e.g. fixtures are wall mounted versus floor mounted type, locations of ADA fixtures match, etc.). Where conflicts occur clearly identify the issue on the fixture submittal along with a proposed resolution; or resolve prior to making the submittal by the project RFI process.
2. Space Verification: Prior to ordering any fixtures or making submittals, Contractor shall check the drawings and verify that all fixtures will fit the space available (i.e. fixtures fit any cabinets fixtures are to be installed in; fixtures have adequate access clearances for proper use; etc.).

C. Lead-Free Requirement: All items in contact with potable water shall be lead free. Fixtures used to dispense potable water for drinking shall meet the requirements of NSF/ANSI 61.

PART 2 PRODUCTS

2.1 ACCEPTABLE MANUFACTURERS

A. Products shall comply with Section 20 05 00, Paragraph 2.1, Acceptable Manufacturers.

B. Water Closets: Kohler, American Standard, Eljer, Mansfield.

C. Vitreous china (other than water closets) and enameled cast iron fixtures: American Standard; Kohler, Eljer, Mansfield.

D. Water Closet Seats: Church; Beneke; Olsonite; Kohler; Bemis.

E. Carriers: Josam; J.R. Smith; Wade; Zurn.

F. Hand Wash Sinks: Eagle.

G. Stainless Steel Sinks: Just; Elkay, Franke.

H. Service Sinks: Fiat; Stern and Williams; Swan; Kohler; Mustee.

I. Drinking Fountains: Haws; Elkay.

J. Hydrants and Hose Bibbs: J.R. Smith; Zurn; Josam; Mifab.

K. Floor Drains and Floor Receptors: J.R. Smith; Zurn; Josam; Mifab.

L. Plumbing Brass: McGuire; American Standard; Brasscraft; Dearborn Brass; Chicago Faucet; Crane; Eljer; Frost; Kohler; Speakman; Symmons; T & S Brass; Elkay.

M. Faucets: Chicago Faucet (no substitutions).

N. Stops: McGuire; Brasscraft; ProFlo.

O. Flush Valves: Sloan, Zurn, Toto.

P. Hot Water Temperature Limiting Valve: Symmons, Watts, Chicago Faucet, Acorn Controls, Leonard, Cash Acme.

2.2 PLUMBING FIXTURES

A. General:

1. Plumbing Fixtures are listed below by reference numbers, corresponding to the reference number adjoining these items on the drawings.
2. All vitreous china and enameled cast iron fixtures shall be finished white unless specifically noted otherwise.
3. All stainless steel sinks shall be sound deadened, and shall have faucet ledge (except where noted specifically without ledge).
4. In interests of Owner's Standardization, fixtures of similar type shall be product of one manufacturer; trim of similar type shall be product of one manufacturer.

B. Water Closets:

<u>P-1A Water Closet - Wall Hung - ADA:</u>

Water Closet: Kohler “Kingston-Lite”, No. K-4325, vitreous china, elongated bowl, wall mounted, siphon jet action bowl with 1-1/2" top spud, and 1.28 gallon flush.

Flush Valve: Sloan "Royal” 111-1.28 chrome-plated low consumption flush valve with vacuum breaker, quiet-action, and screw driver stop.

Seat: Kohler “Lustra”, No. K-4670-SC, white plastic elongated seat, open-front and stainless steel self-sustaining check hinge.

ADA: Configure and install for ADA access. Verify with Architectural drawings for mounting heights and off-center stall dimensions. Provide with flush valve so that handle is on wide side of stall.

<u>P-1B Water Closet - Wall Hung:</u>

Same as P-1A fixture, except that fixture shall be mounted for normal use.

C. Urinals:

<u>P-2A Urinal - Wall Hung - ADA:</u>

Urinal: Kohler “Bardon” No. K-4991-ET, vitreous china, wall hung, with 3/4" top

inlet spud, wall hangers, 0.125 gallon flush, and beehive strainer.

Flush Valve: Sloan "Royal" 186-0.125 HEU chrome plated flush valve, with vacuum breaker, and screw driver stop.

ADA: Configure and install for ADA access. Verify with Architectural drawings for mounting heights and off center stall dimensions. Provide special carries as required.

P-2B Urinal - Wall Hung - Accessible:

Same as P-2A, but mounted for normal use.

D. Lavatories:

P-3A Lavatory – Countertop - ADA:

Lavatory: Kohler "Farmington", No. K-2905-4 19-1/4" x 16-1/4", cast iron, self-rimming oval lavatory with 4" faucet centers and integral overflow.

Plumbing Brass: Kohler No. K-7715 lavatory drain with perforated grate and 1-1/4" tailpiece; Kohler No. 9000 1-1/4" cast brass "P" trap with cleanout; stops and risers per "Specialties" in this specification section.

Faucet: Chicago Faucet No. XKABCP deck mounted faucet with No. 1000 wing handles, 4" centers, vandal resistant 1/2 GPM spout outlet/aerator, ceramic cartridges, 4" spout.

E. Sinks:

P-5A Sink:

Sink: Elkay No. LR1919 multi-hole drill, 18 gauge, type 304, stainless steel, 19" front to back x 19" left to right x 7-1/2" deep self-rimming sink with rear faucet ledge.

Plumbing Brass: Elkay stainless steel cup strainer with 1-1/2" tailpiece and 1-1/2" cast brass "P" trap with cleanout; stops and risers per "Specialties" in this specifications section.

Faucet: Chicago Faucet No. 1100-HA8XKABCP top mount sink faucet on 8" centers, with No. 1000 handles, ceramic cartridges, No. HA8 swing spout, and aerator.

P-5B Sink:

Sink: Elkay No. LR 3321, dual compartment, multi-hole drill, 18 gauge, type 304, stainless steel, 21" front to back x 33" left to right x 7-7/8" deep self–rimming sink with rear faucet ledge.

Plumbing Brass: Elkay stainless steel cup strainers with 1-1/2" tailpieces and 1-1/2" cast brass "P" trap with cleanout; stops and risers per "Specialties" in this specifications section.

Faucet: Chicago Faucet No. 1100-HA8XKABCP top mount sink faucet on 8" centers, with No. 1000 handles, ceramic cartridges, No. HA8 swing spout, and aerator.

F. Service Sinks:

P-6A Service Sink - Floor Mount:

Sink: Swan No. MS-2424 molded fiberglass sink basin, 24" x 24" x 10" high, color white, with minimum 30" long heavy duty reinforced 5/8" diameter flexible hose for connection to 3/4" hose thread, spring loaded stainless steel hose bracket, vinyl rim guards.

Plumbing Brass: Combination dome strainer and lint bucket of minimum 16 gauge 302 stainless steel, with stainless steel screws and 3" drain connection.

Faucet: Chicago Faucet No. 897-RCF combination service sink fitting with 3/4" hose thread on spout, No. 369 handles, wall brace, pail hook, No. R-1/2" flanged female adjustable arms, integral stops, ceramic cartridges, polished chrome-plated.

G. Water Dispensers:

P-7B Valve Box:

20 gauge hot dipped galvanized steel box with 18 gauge face plate, 1/2” inlet x 1/4” outlet compression angle valve. Guy Gray Model BIM 875.

H. Drinking Fountains/Bottle Fillers:

P-8A Drinking Fountain and Bottle Filling - ADA:

Elkay Model No. EZWS-EDFP217K bottle filling station and drinking fountain, wall mount, stainless steel type 304 14 gauge construction, with #4 satin finish, front push button operation, one-piece chrome-plated anti-squirt bubbler, anti-splash ridge, cabinet located, waste strainer, and 1-1/4” O.D. tailpiece. Shall have no-touch sensor activated operation and LED interface display, 120 volt/1 phase.

I. Hydrants and Hose Bibbs:

P-10A Wall Hydrant - Non-Freeze:

J.R. Smith No. 5519 recessed box type wall hydrant, non-freeze type, with polished bronze box and bronze hinged cover, bronze hydrant and casing, integral vacuum breaker, "T" handle key and 3/4" inlet, 3/4" hose outlet, and overall depth to suit wall thickness and provide suitable freeze protection.

J. Floor Drains:

P-11A Floor Drain:

J.R. Smith No. 2010-A cast iron body floor drain, with nickel bronze adjustable strainer head, round nickel bronze grate, vandal proof screws, reversible flashing collar, and trap primer connection. Size drain outlet to match pipe size shown on drawings.

P-11B Funnel Floor Drain:

Same as P-11A but with 6" diameter nickel bronze top funnel (No. 3581). Cut out strainer inside of funnel to prevent splashing.

P-11C Floor Receptor:

J.R. Smith Figure 3100 series, enamel coated floor receptor, 10" deep, with 12" square nickel bronze half grate and rim, sediment bucket, trap primer connection, vandal-proof screws. Size outlet to match pipe size noted on drawings. Where used at dishwasher, provide with 1/2 grate. Where serving boilers leave grate off

(turn over to Owner).

P-11E Trough Drain - Stainless Steel:

Type: Custom fabricated stainless steel trough drain with grate.

Dimensions: Unit shall have dimensions as indicated on the plans, minimum internal width of 4 inches.

Construction: Type 304 stainless steel minimum 14 gauge, all welded construction. Drain pan shall have built-in pitch towards drain, able to accommodate up to a 4-inch diameter waste outlet pipe. Provide with outlet size to match waste pipe size drain connects to.

Grating: Type 304 stainless steel subway style grating shall be 3/16-inch x 1" vertically positioned bars spaced 1-inch apart for ease of drainage. Two 5/8-inch stainless steel rods, set 2-1/4-inch in from each edge, shall be welded to the bars to eliminate swaying.

Strainer: Perforated stainless steel removable strainer, sized to tightly fit drain outlet pipe, with cross piece to allow ease of removing. Strainer shall be able to be inverted to serve in a "bee-hive" arrangement.

2.3 OFF-THE-FLOOR FIXTURE SUPPORTS (CARRIERS)

A. General: Type to suit fixture and building construction, with added anchors, bracing, wall backing and accessories to comply with maximum specified fixture movement. Concealed in wall. Provide with all hardware and accessories for proper fixture support to suit the application. See Section 20 05 29 for hangers and supports.

B. Water Closets: Cast iron or steel construction, adjustable to support fixture, with positive sealing gasket fabricated of closed cell neoprene. Shall be capable of supporting 500 lb load test per ANSI A112.19.2; Provide with rear anchoring lug on single units to comply. J.R. Smith 100, 200 and 300 series with added anchors and accessories to comply with maximum specified fixture movement.

C. Urinals: Steel construction, with high strength steel uprights welded to 4-inch square steel base plates for floor anchoring, top and bottom fixture support and bearing plates, adjustable. J.R. Smith Figure 635 and 637 with added anchors, bracing, wall backing and accessories to comply with maximum specified fixture movement.

D. Lavatories: Steel construction, with 1-inch x 3-inch rectangular steel uprights welded to 4-inch square steel base plates for floor anchoring, and arms for lavatory support. J.R. Smith Figure 700 and 710 with added anchors, bracing, wall backing and accessories to comply with maximum specified fixture movement.

E. Other Fixtures: Manufacturers' standard carrier to suite fixture and application, steel construction with anchors, bracing, wall backing and accessories to comply with maximum specified fixture movement.

F. Non-Standard Fixtures: For fixtures that standard carriers are not manufactured for provide 3/16" thick steel back plate for block walls and wood stud walls; or a 2" x 2" x 1/4" angle welded to at least four studs for metal stud walls, with through bolts and fasteners to support fixture and comply with maximum specified fixture

movement.

2.4 SPECIALTIES

A. General: Unless indicated otherwise, the following fittings and materials (i.e. specialties) shall be used.

B. Fixture Traps: 17 gage seamless chrome plated cast brass tubing, with 2 inch minimum seal, cast brass slip nuts, size as required by Uniform Plumbing Code (unless a larger size is indicated), and configured to suit the application. Provide with cleanout where indicated or required by code.

C. Exposed Piping and Fittings: In finished areas and in accessible cabinets, provide piping with chrome plating or sleeved with chromed sleeves or of stainless steel construction/finish; all chrome to have a bright polished finish. No exposed copper allowed (includes accessible cabinet areas).

D. Stops: Quarter turn ball valve type, chrome plated, UPC compliant, with low lead brass body, rated for minimum 125 psi operating pressure and temperature of water used with plus 20 deg F. Size and configuration to suit application. Provide with loose key where installed in areas with public access.

E. Risers: Flexible braided steel type; rated for 125 psig.

F. Escutcheons: See Section 20 05 19.

G. Wall Box: 20 gauge hot dipped galvanized steel box with 18 gauge face plate, 1/2" inlet x 1/4" outlet compression angle valve. Guy Gray Model BIM875.

H. Hot Water Temperature Limiting Valve: Thermostatic water temperature mixing valve with integral checks, complying with ASSE 1070 and UPC Chapter 4. Brass body with brass and stainless steel internal components. Leonard “ECO-Mix” 270 or Symmons “Maxline” Model 5-210.

I. Sealant: See Section 20 05 30. Sealant at fixtures shall be the silicone type, color to match fixture.

J. Refrigerator Valve Box: Guy Gray Model BIM875 stainless steel rough-in box with angle valve (1/2-inch inlet, 1/4-inch compression outlet).

2.5 FOOD SERVICE ITEMS & EQUIPMENT SPECIFIED ELSEWHERE

A. Food Service Equipment: Refer to the kitchen equipment schedule, kitchen (or food service) equipment specifications, and kitchen (or food service) drawings. Under this Section of the specifications provide all plumbing services (HW, CW, drain lines, etc.), provide all plumbing fixtures, and install/furnish those items indicated to be Mechanical (M), Plumbing (P), or by Divisions 20, 22, or 23.

PART 3 EXECUTION

3.1 INSTALLATION OF FIXTURES

A. General: All fixtures shall be completely connected to piping as needed to make a complete and operable installation.

B. Fixture Locations: Mounting heights and locations of fixtures shall be as shown on the Architectural drawings and in accordance with Contract Document requirements. Locations shall be verified and coordinated with the various trades

affected by the installation of these fixtures. When none indicated or shown, obtain mounting location and heights from the Architect/Engineer prior to installation. Floor drains shall be installed in proper locations and coordinated with floor slopes so that drains are set at low points to allow for floor drainage. Floor receptors (or floor sinks) shall be set flush with floors to allow drains to serve as both indirect drain receptors and as floor drains (unless noted otherwise or required to be elevated by code).

C. Rough-In: Determine rough-in location of fixture utilities to suit fixture location, fixture dimensions, elements of construction (i.e. beams, studs, electrical, ducts, etc.), access requirements, casework dimensions, items which may drain/connect to fixture, use of fixture, and related considerations. The fixture rough-in locations indicated on the plans is schematic, and is not to be used for final rough-in purposes. Coordinate fixture locations with other systems so that either conflicting items are relocated or fixture locations are adjusted to suit.

D. Offsets: Provide offsets in piping to fixtures to accommodate building systems. Such offsets shall include off-setting waste piping into cabinet bases (in kick space where possible) to accommodate beams located directly below walls behind fixtures.

E. Carriers: All off-the-floor (i.e. wall) mounted fixtures shall be installed with supporting carriers and additional anchors, bracing and supports to transmit fixture loads to the floor and building structure without exceeding the maximum specified fixture movement. Prior to concealing carrier and associated supports review adequacy of support system with Architect/Engineer.

F. Fixture Sealant: Where fixtures abut to walls, floors, and cabinets seal all joints with a uniform fillet bead of sealant. Provide at other locations as recommended by fixture manufacturer.

G. Protection: Protect fixtures against use and damage until project substantial completion; provide guards and/or boxing to protect.

3.2 INSTALLATION OF SPECIALTIES

A. Escutcheons: Provide escutcheons at each point where an exposed pipe or other fitting passes through walls, floors, backs of cabinets, or ceilings.

B. Stops: Provide stops in water connections to all fixtures/equipment, except where a stop valve is integral to the fixture (e.g. flush valves) and in water connections to all items not served by another valve.

C. Hot Water Temperature Limiting Valve: Install on all lavatories, hand wash sinks, bathtubs, showers, whirlpools, bidets and at fixtures required by Code (reference UPC Chapter 4); set for 115 deg F maximum delivery temperature. Test and adjust for proper operation and submit written report documenting work performed.

3.3 INSTALLATION OF EQUIPMENT SPECIFIED ELSEWHERE

A. General: Refer to the drawing schedules, architectural specifications and related information in the Contract Documents. Under this section of the specifications provide and install and/or connect all plumbing services indicated to be by Mechanical (M), Plumbing (P), or by Divisions 20, 22, or 23.

B. Installation: Comply with installation requirements for fixtures and specialties per

this specification Section.

C. Complete Connections: Provide all water supply stops and appurtenances necessary to make a complete installation of items. All lines between the stops and fixtures/equipment shall be hard piped, chrome plated and sized as indicated (or, where not sized, size per the UPC or manufacturer).

D. Exposed: All waste, drain, indirect drain, and traps shall exposed to view shall be chrome plated or sleeved with chromed sleeves.

3.4 ADJUSTMENT AND CLEANING

A. Cleaning: After completion of installation remove all labels and thoroughly clean all fixtures, trim and fittings.

B. Adjustment: Adjust all flush valves, fixture stops, faucets, valves, and associated plumbing items as necessary for the proper operation of all fixtures and equipment.

3.5 COMMISSIONING

A. The Products referenced in this section are to be commissioned per Section 20 08 00 Commissioning. The Contractor has specific responsibilities for scheduling, coordination, startup, test, development, testing and documentation. At a minimum, the Contractor shall provide a documented and signed record to verify that all equipment and systems installed under this contract have been inspected and functionally tested to verify full compliance with the contract specifications. In many cases, this shall require the Contractor to create or otherwise provide procedures and checklists for approval by the Commissioning Consultant prior to the start of functional testing. Reference Section 01810 and coordinate all commissioning activities with the Commissioning Consultant.

END OF SECTION

SECTION 23 09 33 – ELECTRIC AND ELECTRONIC CONTROL SYSTEM FOR HVAC

PART 1 GENERAL

1.01 RELATED DOCUMENTS

A. Drawings and general provisions of the Contract, including General and Supplementary Conditions and Division 00 and Division 01 Specification Sections, apply to this Section.

B. Requirements of Section 20 05 00 apply to this Section.

1.02 WORK INCLUDED

A. Control System Design.

B. Control System for Building Heating, Ventilation, Air Conditioning, Exhaust.

C. Control Devices, Components, and Wiring.

D. Testing, Adjustment, and Commissioning.

E. Owner Training.

1.03 SUBMITTALS

A. General: Shall comply with Section 20 05 00.

B. Product Data: Submit product information on all items to be used.

C. Shop Drawings: Submit a complete set of shop drawings prior to installation containing the following information: interconnect drawings showing all wiring and control connections; control panel details; arrangement of devices in panels; schedule of dampers with sizes and where used; sequence of operation for all equipment; location of all control devices on scaled building plans; and list of actuators with sizes and where used.

D. Labeling: Submit list of proposed component labeling.

E. Operation and Maintenance Manuals: See Section 20 02 00. In addition to the information required by that Section and Division 01, provide (for inclusion in the Manual) the following:

1. System description.
2. Complete sequence of operation.
3. Reduced size (11" x 17") copies of record drawings.
4. Submittal data on all products.

F. Commissioning Plan and Report: See Section 20 08 00. Provide commissioning plan; including a checklist of control items to be reviewed and method of testing sequence of operation. Submit final report documenting tests performed and results.

1.04 GENERAL REQUIREMENTS

A. Design and Installation: The entire control system shall be designed and installed by skilled control system designers, electricians and mechanics, all of whom are properly trained and qualified for the work they perform.

B. Sole Responsibility: One single Contractor shall be responsible to design, furnish and install the complete Section 23 09 33 control system.

C. Sequence: System shall have sequence of operation as specified in Section 23 09 93.

1.05 WARRANTY

A. Warranty: After completion of the installation of the control system and acceptance by the Owner, the system shall be warranted as free against defects in manufacturing, workmanship and materials for a period of two years from date of substantial completion. In addition, the system shall be warranted to provide the sequence of operation and basic features specified, with the accuracy and flexibility also specified. The system shall be repaired or replaced, including materials and labor, if in Owner's and Engineer's reasonable opinion, system is other than as warranted.

PART 2 PRODUCTS

2.01 ACCEPTABLE MANUFACTURERS

A. Products shall comply with Section 20 05 00, Acceptable Manufacturers.

B. Thermostats and Time Clocks (Non DDC): Honeywell, Paragon.

C. Actuators: Belimo, Honeywell, Siemens, Johnson Controls.

D. Dampers: Ruskin, Greenheck.

E. Carbon Dioxide Sensors: Honeywell, Vaisla.

F. Control Accessories: Idec, Hoffman, McDonnell, Tridelta, Edwards, Mamac, Penn, Belimo, Honeywell, Johnson Controls, Leviton, Arrow-Hart, Alerton.

2.02 BASIC SYSTEM

A. System Type: The system shall be an electronic or electric type. No form of DDC or computer based type of controls shall used.

B. DDC System: Shall be manufacturers standard commercial system, latest version, using components for typical HVAC applications.

C. DDC System Graphics: Provide complete system graphics, typical for manufacturer for commercial building systems. Graphics shall consist of color schematics, plans, and diagrams to visually present system data, operating conditions, and allow user schedule and set point adjustments. Shall include:

1. Building plans showing locations of mechanical equipment and areas served, showing each room (zone) and temperature.

2. Summary status of mechanical equipment.

3. Schematic of system with appropriate temperatures, flows, damper positions, percentage of capacity, power consumption, etc. interposed on schematic. Provide schematic for each Air Handling Unit, boiler and chiller system, domestic HW, and other systems where extensive measurements are made.

4. Graphics shall include all system setpoints and shall allow user to adjust these points.

5. Provide all metering of power consumption as required by code.

6. Provide display of all data needed to provide the specified sequence of operation.

7. Provide suitable computer to allow user interface to system or provide software and accessories for Owner's normal computes to access the system.

2.03 THERMOSTAT AND TIMECLOCK (NON DDC)

A. Programmable Thermostat: Shall be 7-day programmable solid state type, specifically designed for commercial use. Unit (and related relay module, and controls) shall allow for 1st-stage economizer cooling, 2nd stage unit cooling, 1st stage heating, 2nd stage heating and provide other features as required by the sequence of operation. Thermostat shall have means to bypass time clock, have Auto-Cool-Off-Heat switching, setpoint adjustments, and time/day adjustments. Unit shall also have capability for averaging multiple remote thermostat sensors. Honeywell T7351 Series, other Honeywell series (as required to provide sequence and match unit furnished), or approved.

B. Thermostat Sensor: Remote temperature sensor for use with programmable thermostat, specifically designed for commercial use. Unit shall have space temperature sensor, unoccupied mode pushbutton override with LED, and temperature setpoint adjustment. Honeywell T7771 Series, or approved.

C. Logic module: Solid state control package to provide economizer functions. Shall include logic module, sensors, and accessories necessary to provide a complete and operational system, and shall be compatible for use with specified HVAC equipment and programmable thermostat.

D. Accessories: Provide duct temperature sensors required for mixed air applications; shall be the averaging type with a sensor element type so as to sense a representative sample of the medium being controlled. Provide sensors as required to work with economizer controls.

E. General Time Clock: 365 day programmable timeclock, for control of up to four independent loads each with a different schedule, with 50 setpoints of programming. Each output able to be programmed as a maintained or momentary contact closure with duration of 1 to 59 seconds. Features shall include: Time of day scheduling, holiday programming, daylight savings time adjustment, leap year correction, manual override, and battery back-up (for one month operation without power). Unit shall have a NEMA 1 enclosure. Paragon EL74 (or approved).

2.04 CONTROL DAMPERS

A. Type: Dampers shall be parallel blade or opposed blade type, as selected by contractor to best suit application (unless a specific type is indicated).

B. Leakage: Class 1A leakage rated in accordance with AMCA 511 (or better, as required by Code).

C. Construction: Construct of galvanized steel, except where installed in ducts of stainless steel or aluminum construction or handling corrosive air, shall be of stainless steel or aluminum construction (to match duct material). All materials in contact with the airstream shall be suitable for the conditions without deterioration. Provide special coatings as necessary to provide corrosion resistance. Frame shall be minimum 16 gauge.

D. Blades: Single blade type, not exceeding 6 inches in width,16 gauge, with neoprene, extruded vinyl or butyl rubber edge seals and flexible metal jamb seals; linkage interconnecting all blades and actuator axle.

E. Bearings: Nylon, molded synthetic or oil impregnated sintered metal bearings (or other materials as conditions require).

2.05 ACTUATORS

A. Type: Actuators shall be a brushless DC motor type controlled by a microprocessor.

B. Operation: Shall be compatible with control devices used with to provide specified sequence and system features. Run time shall be constant, independent of torque. Actuator shall have manual positioning mechanism and control direction of rotation switch accessible on its cover. Provide with auxiliary switches as required for sequence of operation. Actuator shall be proportional or two position type, as required for application.

B. Sizing: Provide actuator with sufficient power and torque to suit items being controlled and allow proper operation against system pressures liable to be encountered. Actuator shall be capable of driving controlled items from full closed to full open in less than 15 seconds.

C. Spring Return: All actuators shall spring return upon power interruption: The spring return position shall be a “fail safe" position as dictated by freeze, fire, temperature protection, energy saving, or safe operating requirements. Outside air dampers shall spring return closed; return air dampers shall spring return open. VAV terminal units and zone dampers do not require spring return actuators.

D. Accessories: Units shall be complete with all linkages, brackets, and hardware required for mounting and to allow for proper control and operation.

2.06 ZONE DAMPERS (STANDALONE)

A. Type: Control damper with actuator and thermostat for use as a standalone modulating zone control damper. Ruskin ZDR25, ZDS15 and Z2000RT (or approved)

B. Construction:

1. Round Dampers: Constructed of galvanized steel, minimum 18 gauge, with 1/2-inch diameter (or hex shape) full length damper shaft mechanically fastened to damper blade, nylon bushing bearings on both ends of shaft, and sponge foam damper seal. Provide with male crimped end and female plain end.

2. Rectangular: Frame constructed of minimum 0.063-inch extruded aluminum, with minimum 0.063-inch extruded aluminum parallel blades, nylon bearings, linkage interconnecting blades.

C. Operating Limits: Rated for up to 2-inch wc pressure, 2000 feet per minute velocity.

D. Actuator and Controls: 3-wire floating point type actuator, for modulating damper control, 24 VAC, with adequate torque to operate damper, integral changeover temperature sensor, and logic board for interfacing wall thermostat, changeover sensor and actuator for specified sequence.

E. Thermostat: Wall mounted thermostat for modulating control of zone damper to maintain room setpoint; compatible with damper actuator logic board. White plastic housing, backlit LCD screen, 24 VAC, thermistor temperature sensing element, programmable temperature setpoints, and programmable minimum and maximum damper positions. With auxiliary heating contacts for use in activating an auxiliary heater.

2.07 SWITCHES

A. Air Flow Switches: General Purpose utilizing differential air pressure, SPDT snap-acting contacts, adjustable range to suit application, neoprene diaphragm, all aluminum construction.

B. Bypass Switch: Shall be momentary contact type push button. Install in standard wall box with stainless steel cover.

C. Wall On/Off Switch: Standard wall box type switch, single or double pole, and contact type as required to suit application; with illuminated switch for when controlled item is on; volt/ampere ratings to suit application. Provide with stainless steel wall plate; label as to function.

2.07 CARBON DIOXIDE SENSOR – WALL

A. Type: Wall mounted non-dispersive infrared (NDIR) type carbon dioxide sensor. Honeywell C7232A Series (or approved).

B. Performance: Measuring range 0 to 2000 ppm CO2, accuracy plus or minus 5% of full scale. Shall have long term stability of 5 years (i.e. no more than 5% of full scale error after 5 year operation).

C. Display: LCD display showing measured CO2 levels.

D. Housing: ABS molded plastic housing, color white, with vent openings.

E. Output: Shall provide 4 to 20 mA, and 0 to 10 Vdc outputs, selectable by output selection jumpers and SPST normally open relay output.

2.08 WATER CONTROL VALVES

A. General: Valves shall be fully proportioning, with modulating plugs for equal percentage of linear flow characteristics (except where two way on/off type are specifically indicated). The valves shall be sized by the Contractor for the flow arte indicated with a pressure drop no greater than 4.0 psi (unless indicated otherwise) control manufacturer and be provided with actuators of sufficient power for the application. Valve body and actuator selection shall be sufficient to

handle system pressures and temperatures, and shall be able to close off against the differential pressures to be encountered in the system.

B. 1/2-inch Through 1-inch: Valves shall be constructed with a cast brass body and screwed ends. Trim shall consist of a removable cage providing valve plug guiding throughout the entire travel range. A stainless steel stem shall be provided. Bonnet, cage, and stem and plug assembly shall be removable for servicing. Body rating shall be 400 psi at 150 degrees F. 1/2-inch valves shall be available in Cv ratings of 0.2, 0.4, 1.2, 2.2 and 4.4.

C. 1-1/2 inch Through 2-inch: Valves shall be constructed with a cast brass body and screwed ends. For special duty, valves may be selected by the control manufacturer to have either bronze or cast iron bodies with screwed or flanged ends.

D. 2-1/2 inch and Above: Valves shall be constructed with a cast iron body and have flanged connections.

E. Normal Position: All valves shall have spring return actuators; heating valves shall be normally open (unless otherwise noted); cooling valves shall be normally closed (unless otherwise noted).

2.09 PRESSURE SENSOR/TRANSMITTERS

A. Air Differential Pressure Sensor: Electronic transducer, incorporating linear variable differential transformer type sensing element with two-wire 0-10 Vdc transmitter. Accuracy shall be +/- 2% of full scale. Submit chosen spans for review.

B. Liquid Differential Pressure Sensor: Single pole, single throw switch, bellows type, with adjustable range, suitable for application intended.

C. Air Velocity Transmitter: Shall be a duct mounted instrument that measures the difference between total pressure and static pressure to get velocity pressure. Measurement shall be by a pitot tube located in the moving air stream or by a duct mounted air flow measuring station. Air velocity devices on inlet of air terminal units shall be furnished with units. The transmitter shall be an industrial quality device that produces a linear output directly proportional to the input utilizing an integral square root extractor. The air velocity span shall be a segment of the range between 200 and 5000 feet per minute.

2.11 VARIABLE FREQUENCY DRIVES

A. Type: Adjustable frequency and voltage variable speed controller, pulse width modulated type.

B. Controller: Shall be housed in a NEMA 1 (or better) enclosure, and shall provide 6 to 60 Hz adjustable torque output. Standard Features:

a. Start-stop speed selection.

b. Manual speed potentiometer.

c. Input fuses.

d. Insensitive to incoming power phase sequence.

e. Adjustable volts/Hertz.

f. Output frequency stabilized to + 0.5% of set speed for +10% to -5% change in line voltage of 15 degrees C change in ambient temperature.

g. Three-phase output voltage regulated to + 1% of rated voltage with +10% to -5% variations in plant power.

h. Standard off-the-shelf, NEMA B and synchronous motors (3600, 1800, 1200 rpm) usable without derating controller.

i. Automatic shutoff under output short circuit conditions or when load current exceeds150% of maximum output amps (RMS).

j. Input fuses.

k. Line transient protection to prevent power line transients from harming the controller.

l. Relay contact to provide external signal for alarm and run condition.*

m. Monitor lamps (or LCD display) indicating: power on, zero speed, enabled, unit failure (with type indicated).

n. Hand-Off-Auto switch.

o. Auto restart after power outage.

p. Isolated Process control Follower - accepts 0 to 5 mA, 1 to 5 mA, 4 to 20 mA, 10 to 50 mA, 0 to 10 V D-C or 25 to 250 V D-C signal.

q. Input Disconnect (meeting NEC requirements for unit power disconnect).

r. Output Contactor - for positive motor disconnect.

s. Output Overloads - using individual phase bimetallic thermal sensors.

t. Ammeter - ampere scale depending upon drive rating.*

u. Voltmeter -0 to 500 volt (460 volt drives); 0 to 750 volts (575 volt drives).*

v. Frequency Meter - 0 to 120 Hz scale.

w. Manual Bypass - To switch the motor to or from the controller to the line.*

* Not required on units serving fans under 2 hp.

C. VFD shall be for use with specified equipment. Unit shall accept appropriate control signal and provide for variable speed operation of unit served.

D. System shall be fully compatible with motors furnished, and shall be free of audible noise exceeding an NC of 45 in any octave band.

2.12 ACCESSORIES

A. Wiring and Conduit: Shall comply with Division 26 specifications and with code. Wiring that performs code required life safety shutdown of equipment or fire alarm interface shall comply with NFPA standards and local codes for fire alarm system wiring.

B. Control Cabinet: Wall mounted, NEMA construction type to suit application, minimum 14 gauge sheet metal, hinged front door with latch. Size as required to house controls.

C. Relays: Shall be rated for the application, with a minimum of two sets of Form C contacts, enclosed in a dust-proof enclosure. Relays shall have Hand-Off-Auto switch, and LED's (or pilot lights) to indicate the energized mode. Relays shall be rated for a minimum life of one million cycles. Operating time shall be 20 milliseconds or less, with release time of 10 milliseconds or less. Relays should be equipped with coil transient suppression devices to limit transients to 150% of rated coil voltage. Contact rating, and configuration selected to suit application.

D. Thermowells: Bronze or brass with NPT threads, sized to match device used with. All wells to be installed by the trade installing the piping system the well installs in.

E. Duct Smoke Detector: Ionization or photoelectric type, with sampling tube (sized to match duct used on) 2 sets from C contacts rated at 10 amps (115 VAC) and 1 set from A contacts rated at 2 amps (30 VDC), and trouble contacts. For use with 115 VAC power. Suitable for temperatures 32 deg F to 140 deg F, and duct velocities up to 4,000 feet per minute. Unit shall be complete with plastic housing, clear plastic cover, gaskets, mounting hardware, visual indication of power and alarm, test/reset switch, and all accessories for proper operation. UL listed and complying with applicable codes and standards.

G. Miscellaneous Components/Sensors/Transmitters/Transformers: Shall be manufacturer's standard, designed for application in commercial building HVAC control systems, compatible with other components so as to provide sequence of operation specified.

PART 3 EXECUTION

3.01 INSTALLATION

A. General: Provide all devices, sensors, relays, switches, dampers, actuators, conduit, tubing, wiring, motor starters and all other devices required to provide a complete integrated control system with the sequence of operation and features as specified. It is the Contractor's responsibility to coordinate with other trades for the installation of control devices in systems installed by others.

B. Installation: Install all control components in accordance with manufacturer's instructions and recommendations and best professional practices.

C. Coordination: Coordinate work with other trades to ensure that all trades have the information necessary so that they may properly install any necessary control components, interconnect with control components, and install their work to accommodate controls. Identify all items requiring ceiling or wall access doors (or other special requirements) to trade installing access doors or performing related work.

D. Space Requirements and Locations: Carefully check space requirements and coordinate with other trades to ensure that items can be installed in the allotted spaces, including above finished suspended ceilings. Adjust locations of panels, equipment, devices, and the like, to accommodate work and prevent interferences. Determine the exact route and location of wiring, conduit and other control devices prior to beginning work.

E. Mounting: Mount controls adjacent to associated equipment on vibration free elements on free standing fabricated supports; mount and locate for best access.

F. Control Cabinets: All electrical devices, relays, and components shall be installed in protective covers (i.e. control cabinets), except where installed concealed above ceilings a cover is not required. Controls/devices shall be logically assembled in cabinet, with all devices and cabinet labeled.

G. Thermostats: Room thermostats shall be mounted 4'-6" above finished floor unless indicated otherwise. Thermostats shall connect to the HVAC unit serving the space the thermostat is located in, unless indicated otherwise. Not all thermostats are shown on the drawings and those shown are preliminary only. Contractor shall indicate all final thermostat locations on submittal drawings. Contractor is responsible to coordinate locations to avoid tackboards, casework, and other interferences.

H. Power: It shall be the responsibility of this Contractor to provide power for all control devices requiring power. Coordinate with the Division 26 Contractor to arrange for necessary power circuits. All control devices shall obtain power from circuits dedicated to control power.

I. Wiring, Conduit and Electrical:

1. General: Provide all electrical wiring and devices in accordance with applicable codes and Division 26 requirements.

2. Conduit: All wiring shall be installed in conduit and in accordance with Division 26 specifications, except that low voltage wiring within ceiling plenum spaces, mechanical mezzanines, and attics may be installed without conduit. Wiring in walls shall be in conduit.

3. Wire Labeling: Label or code wiring at each end to show location of the opposite end. Each point of all field terminal strips shall be permanently labeled or coded to show the instrument of item served. Color coded cable with cable diagrams may be used to accomplish cable identification and terminal strip.

4. Service Loop: Provide minimum of 6” extra wiring at all wiring terminations for ease of future maintenance/servicing. Such extra wiring shall be neatly coiled/bundled to allow for uncoiling when the connected equipment is serviced.

5. Workmanship: Install all conduit and wiring parallel to building lines, in neat bundles, supported at not less than 5 foot intervals.

J. Component Labeling: All control components, except regular room thermostats, shall be equipped with name plates to identify each control component. Components in finished rooms shall be labeled as to generic item controlled for better user understanding; other devices shall be labeled with the same designation which appears on the Control Diagrams. Contractor shall submit list of proposed labeling prior to installing. Reference Section 20 05 00.

K. Thermostat Setpoints: Thermostat Setpoints (all adjustable) shall be as follows unless indicated otherwise:

Occupied Heating	70 degrees F
Unoccupied Heating	65 degrees F

Occupied Cooling	75 degrees F
Unoccupied Cooling	85 degrees F

L. Motor Starters: Shall be by Division 26; except for loads 1/2 hp and less which shall be by this Section.

M. Device Duct Installation: All control devices installed in ductwork shall be positively anchored and attached to the ductwork by mechanical means (fasteners, straps, unistrut, etc).

N. Miscellaneous Controls: Provide all miscellaneous control items as noted in the Contract Documents. Provide all necessary control wiring between items for proper control.

3.02 INSTALLER COMMISSIONING

A. General: The commissioning specified in this paragraph is independent and separate of the commissioning work of Section 20 08 00 and is to be provided by the Section 23 09 33 system installer.

B. Commissioning:

1. General: Check all system connections and control components for proper installation. Provide testing of the control system to verify proper system operation and that the specified sequences of operation are provided. Commissioning shall include checking system under all modes of operation, documenting system performance, making corrections as required for proper operation, and re-testing as needed to obtain final proper operation.

2. Dampers: Verify all dampers operate through their full range of motion and in the proper direction in response to controls signals.

3. Sensors/Thermostats: Check measurements of temperature sensors, thermostats, pressure sensors and other devices against independent readings to confirm proper operation and sensor locations. Readjust sensor locations as necessary to account for field conditions that may cause inaccurate measurements.

4. Calibration: Calibrate items as necessary to allow for their proper operation.

5. Adjustments: Adjust system settings as needed to allow for best system operation, consistent with the specified sequences and for facilities of the type the system serves.

C. Start-Up: Coordinate all system and equipment start-up with other trades. Start-up systems in accordance with equipment manufacturer's instructions and in conjunction with trades that installed the items being controlled, so that they (or manufacturer's representatives) are present at start-up. Operate and configure the controls for safe equipment start-up and so that equipment operates in a controlled manner. See equipment specification sections for equipment start-up requirements. Test and observe all equipment being controlled during start-up to confirm proper controls operation.

3.04 OWNER INSTRUCTION

A. Owner Instruction: Provide instruction to Owner on the operation and maintenance of the control system. Provide field demonstrations and show Owner the locations of all control devices; explain and demonstrate how system adjustments are made; explain and demonstrate system sequences of operation.

END OF SECTION

SECTION 23 09 93 – SEQUENCE OF OPERATION FOR HVAC CONTROLS

PART 1 GENERAL

1.01 RELATED DOCUMENTS

A. Drawings and general provisions of the Contract, including General and Supplementary Conditions and Division 00 and Division 01 Specification Sections, apply to this Section.

B. Requirements of Section 20 05 00 apply to this Section.

1.02 WORK INCLUDED

A. Sequence of Operation

1.03 SUBMITTALS

A. General: Shall comply with Section 20 05 00.

B. Sequence: Submit complete description of sequence of operation. Sequence submitted shall not be a direct copy of the sequence specified herein, but shall be written to reflect the actual control sequence provided.

C. Shop Drawings: Provide complete control system shop drawings; see Section 23 09 33.

PART 2 PRODUCTS

2.1 NOT APPLICABLE

PART 3 EXECUTION

3.01 GENERAL

A. General: Provide complete control system with sequences of operation as specified. All mechanical equipment shall be automatically controlled by the Division 23 control system, unless specifically indicated otherwise. Where no sequence of operation is indicated submit a proposed sequence for Engineer review; such sequences shall match the intended equipment use, code, and ASHRAE standards for the type of equipment and application.

B. Time Control: Control system shall provide time schedule control (i.e. occupied/unoccupied/ warm-up modes switching) for all mechanical equipment. Provide independent occupied/unoccupied schedules and optimum start (i.e. warm-up) cycle for each HVAC units (unless noted otherwise), all fans having time schedule, and all heaters. Except that exhaust fans serving adjacent restroom areas may share time schedules.

C. Warm-up Control: Control system shall provide warm-up switching for all HVAC units and items indicated as having a warm-up cycle.

D. Adjustability: All temperature setpoints and time control settings shall be adjustable.

E. Thermostats: Various thermostats are not shown on the drawings but are required per the sequence of operation specified. Coordinate with Engineer for

location of all such thermostats prior to installing. Indicate proposed locations on submittals.

F. Average Thermostats: Where average thermostats are indicated on plans combine and average temperature requirements from each sensor and use average requirements to control equipment.

G. Miscellaneous Items: See plans for units with motorized dampers in the ducts and miscellaneous other items requiring control.

3.02 HEAT PUMPS

A. General:

1. Controls shall control the units cooling, heating, system dampers (economizer), in proper sequence to provide a supply air temperature that will satisfy space conditions.

2. Heating and cooling shall be properly sequenced so that there is no overlap between the use of heating and cooling.

B. Occupied Mode:

1. Fan shall run continuously.

2. Unit shall cycle in heating or cooling modes as required to satisfy space thermostat.

a. Heating: Heat pump shall operate at 1st stage of heating, with electric heater as final stage.

b. Cooling: Heat pumps with economizers shall use outside air as the first stage of cooling. Economizer shall be dry bulb or enthalpy type, using Outside Air (OA) temperature sensor, mixed air temperature sensor and supply air temperature control scheme. Economizer shall be enabled only when OA temperature (or enthalpy) is less than the units Return Air (RA) temperature (or enthalpy). The OA/RA dampers shall be modulated as required to satisfy the supply air temperature control scheme. Heat pump shall operate in the cooling mode as the final stage of cooling. Motorized relief dampers (where applicable) shall operate in unison with the OA dampers to progressively open as the OA dampers open; provide with an offset control so that the relief dampers do not begin opening until the OA dampers are at least 15% open.

3. OA dampers shall be in the minimum position when unit is in heating and under economizer control when unit is in cooling. OA damper shall not close below the minimum airflow setting indicated on the plans; coordinate with balancer for minimum setting.

OR, FOR CO2 CONTROLS

3. Outside air dampers shall be under CO2 control when unit is in heating, and under economizer and CO2 control when unit is in cooling (whichever is calling for the most open OA damper position shall control the OA damper). CO2 controls shall open OA damper to maintain space CO2 level of 600 ppm. OA damper shall not close below the minimum airflow setting indicated on the plans; coordinate with balancer for minimum

setting.

C. Unoccupied Mode: Fan shall not run continuously. Unit's fan and heating/cooling shall cycle on and off as required to maintain setback temperatures. Outdoor air dampers shall be fully closed.

D. Warm-up Mode: Unit shall run as in the unoccupied mode (outdoor air dampers fully closed) until the space temperature has warmed up to the occupied mode heating setpoint, then unit shall operate as specified for the occupied mode.

E. Mode Control: Units' mode of operation shall be determined by unit thermostat time schedule and time schedule override; warm-up mode shall be initiated by thermostat's optimum start controls.

3.03 EXHAUST FANS

A. General: See "Control" column on Fan Schedule for which of the following control methods apply to each fan.

B. Wall Switch: Fan shall be controlled by wall mounted on/off wall switch.

C. Interval Timer: Fan shall be controlled by wall mounted interval timer; fan shall be on when timer is activated and off otherwise.

D. Time Clock Control: Fan shall run from time clock control schedule; fan shall be on for the scheduled occupied period and be off otherwise.

E. Thermostat: Fans shall run when temperature rises above setpoint, and shall be off once space temperature falls 2°F or more below setpoint.

3.04 PUMPS

A. Domestic HW Circulation Pumps: Pump shall be enabled to operate by time clock schedule. When enabled, pump shall be controlled in conjunction with a sensor in the hot water recirculation line. When HWC falls to 5 degrees F below setpoint, the pump shall run; when temperature returns to setpoint, pump shall be off. Setpoint and differential shall be adjustable. Initial setpoint shall be 5 degrees less than domestic hot water setting for system used on.

3.05 ELECTRIC HEATERS

A. General: Heater shall be controlled by heater's integral thermostat and integral night set-back relay; with HVAC unit's thermostat that serve the area or central timeclock providing occupied/unoccupied mode control.

B. Occupied Mode: Heater shall be on once space temperature has fallen below setpoint, and shall be off once temperature has risen 2 deg F or more above setpoint.

C. Unoccupied Mode: Heater shall be off.

D. Warm-Up Mode: Heater shall be off.

3.07 ELECTRIC DUCT HEATERS

A. General: Heater shall be controlled by a wall mounted thermostat to vary the heater capacity to satisfy space conditions. Heater shall have staged or proportional control as indicated.

B. Operation: Heater shall be on once space temperature has fallen below setpoint,

and shall be off once space temperature has risen 2 deg F or more above setpoint (with proportional or staged control between on/off limits).

3.10 ZONE DAMPERS

A. General: Damper shall be controlled by a wall mounted thermostat to vary the air volume supplied to the zone to satisfy space conditions.

B. Changeover: A changeover supply air duct temperature sensor shall be provided to reverse damper operation to allow proper control depending on whether the unit supplying the zone damper is in heating or in cooling. Changeover to “Unit in Heating” mode shall occur whenever the supply air temperature is 3 degrees above room temperature; changeover back to “Unit in Cooling” mode shall occur whenever the supply air temperature is below room temperature.

C. Damper Maximum/Minimums: Airflow shall vary from damper maximum and minimum positions; coordinate with balancer for settings.

D. Occupied Mode:

1. Unit in Cooling: When the unit serving the zone damper is in cooling and the zone temperature rises, the air volume to the zone shall increase to maintain the zone setpoint. As the zone temperature falls, the air volume to the zone shall decrease to maintain the zone setpoint.

2. Unit in Heating: When the unit serving the zone damper is in heating the zone damper operation shall be reversed from when the unit is in cooling. As the zone temperature rises, the air volume to the zone shall decrease to maintain the zone setpoint. As the zone temperature falls, the air volume to the zone shall increase to maintain the zone setpoint.

E. Unoccupied Mode: Damper shall be full open.

F. Warm-Up Mode: Same as for occupied.

3.11 MISCELLANEOUS CONTROLS

A. Water Heaters: Shall be controlled by integral thermostat provided with unit. Set for temperature as noted in water heater schedule.

B. Fire Alarm System Shutdown:

1. Provide necessary conduit, wiring, and accessories to shutdown each unit upon activation of that unit's smoke detectors (Smoke detectors are by Division 23 unless specifically shown on the electrical plans and Division 26 specifications). Connections shall be hardwired, independent of any control system logic, so that failure of control system or loss of control system will in no way prevent the fire alarm shutdown of the system. In addition to shutting down the unit with the alarmed smoke detector, all equipment interlocked or served by that unit shall be off. Other units shall also shut-off as required to avoid building pressure differentials and similar undesirable effects. Upon reset of alarmed device, system shall automatically return to normal, provide time delay start of equipment to prevent excess load starting at the same time.

2. In addition to the above specified hardwired fire alarm shut-down (which pertains to equipment with smoke detectors), provide the following: Shut-down all air handling equipment when the building fire alarm system goes

into alarm. Zone contacts in the fire alarm system are available for this purpose. This added shut-down may be accomplished by use of control logic and is not required to be hardwired but shall be of a fail-safe nature so as to provide the necessary shut-down in case of control failure. Reset shall be same as that specified for hard-wired unit smoke-detector shut-down.

3.13 MAKE-UP AIR UNIT

A. Occupied Mode: Fan shall run continuously, with heater modulating to provide a supply air temperature that will satisfy space conditions. Outside air damper shall be 100% open. Unit VFD shall measure space pressure and vary fan speed to maintain space pressurization from -0.10 inches to -0.05 inches.

B. Unoccupied Mode: Unit shall operate if radiant heat system is unable to maintain night setback. Set units to operate at 5 deg F below normal night setback. Operate unit with maximum amount of return air, and minimum OA (sufficient to allow for direct gas firing of unit).

C. Warm-Up Mode: Not used.

D. Space Controls: Provide room mounted Hand-Off-Auto Control with temperature setpoint

3.16 MISCELLANEOUS CONTROLS

A. Water Heaters: Shall be controlled by integral thermostat provided with unit. Set for temperature as noted in water heater schedule.

B. AC Unit: Connect thermostat (furnished with unit) to indoor section, provide control interconnections from indoor section to outdoor section. Set and adjust for proper operation.

C. Fire Alarm System Shutdown:

1. Provide necessary conduit, wiring, and accessories to shutdown each unit upon activation of that unit's smoke detectors (Smoke detectors are by Division 23 unless specifically shown on the electrical plans and Division 26 specifications). Connections shall be hardwired, independent of any control system logic, so that failure of control system or loss of control system will in no way prevent the fire alarm shutdown of the system. In addition to shutting down the unit with the alarmed smoke detector, all equipment interlocked or served by that unit shall be off. Other units shall also shut-off as required to avoid building pressure differentials and similar undesirable effects. Upon reset of alarmed device, system shall automatically return to normal, provide time delay start of equipment to prevent excess load starting at the same time.

2. In addition to the above specified hardwired fire alarm shut-down (which pertains to equipment with smoke detectors), provide the following: Shut-down all air handling equipment when the building fire alarm system goes into alarm. Zone contacts in the fire alarm system are available for this purpose. This added shut-down may be accomplished by use of control logic and is not required to be hardwired but shall be of a fail-safe nature so as to provide the necessary shut-down in case of control failure.

Reset shall be same as that specified for hard-wired unit smoke-detector shut-down.

D. Miscellaneous Items: See plans for units with motorized dampers in the ducts and miscellaneous other items requiring control.

END OF SECTION

SECTION 23 31 00 – HVAC DUCTS AND CASINGS

PART 1 GENERAL

1.01 RELATED DOCUMENTS

A. Drawings and general provisions of the Contract, including General and Supplementary Conditions and Division 00 and Division 01 Specification Sections, apply to this Section.

B. Requirements of Section 20 05 00 apply to this Section.

1.02 WORK INCLUDED

A. Environmental Ductwork Systems

B. Flexible Duct

C. Acoustical Duct Lining

D. Preparation of Duct for Service

E. Duct Pressure Testing

1.03 DEFINITIONS

A. Duct Sizes: All duct dimensions shown are inside clear dimensions. Where inside duct lining is specified or indicated, duct dimensions are to the inside face of lining.

B. Environmental Ductwork Systems: Ductwork systems that are not covered by Section 23 35 00 - Special Exhaust Systems.

1.04 QUALITY ASSURANCE

A. All work and materials shall comply with SMACNA-DCS, NAIMA-DLS, ASHRAE-F, IBC, IMC, NFPA-90A, NFPA-90B, and code. The most restrictive criteria governs.

B. Leakage Criteria: Duct system shall be constructed and sealed so that leakage does not exceed the following:

1. Supply Duct: From fan to connection to air outlet 5%.

2. All Systems - Return Duct: 5%.

3. All Systems - Exhaust Duct: 5%.

C. Fabrication Proximity: The Contractor performing the work of this section shall have fabricating facilities located within 100 miles of the project site.

D. Drawing Review: Prior to beginning any work review all drawings, duct routing, duct connections, equipment configuration, equipment connection locations, and other work details to discover conflicts in anticipated duct arrangement and improper or incomplete connections. Review shall include the following: supply ducts not connected into return (or exhaust) ducts, ducts not crossed and improperly connected in shafts, air outlets/inlets connected to ducts, unit configuration compatible with planned duct connections, louver locations match architectural plans. Submit resolutions of such possible conflicts as submittals with shop drawings of proposed solutions; written description in lieu of shop drawings is acceptable for minor issues.

1.05 SUBMITTALS

A. General: Comply with Section 20 05 00.

B. Product Data: Submit product data for duct lining, flexible duct, and factory fabricated items.

C. Shop Drawings: Submit shop drawings for all HVAC ductwork which is to be installed differently than as shown on the drawings.

D. Conflict Resolution: Submit additional shop drawings showing proposed resolution of conflicts after review of documents and again after review of actual field conditions.

1.06 DUCT PRESSURE CLASS

A. Constant Volume Systems: Ductwork shall be constructed to the pressure class corresponding to the static pressure indicated for the fan which serves the duct system or 1-inch pressure class (plus or minus as appropriate), whichever is higher; unless noted otherwise.

1.07 REFERENCES

A. ADC-FLEX: Air Diffusion Council Flexible Duct Performance and Installation Standards.

B. ASHRAE-F: ASHRAE Handbook of Fundamentals.

C. ASTM A 653: Steel Sheet, Zinc Coated (Galvanized) or Zinc-Iron Alloy-Coated (Galvannealed) by the Hot Dip Process

D. ASTM A 924: General Requirements for Steel Sheet Metallic-Coated by the Hot-Dip Process.

E. ASTM E 84: Standard Test Method for Surface Burning Characteristics of Building Materials.

F. IMC: International Mechanical Code.

G. NAIMA-DLS: North American Insulation Manufacturers Association Fibrous Duct Liner Standards, 1st Edition.

H. NFPA 90A: Standard for the Installation of Air Conditioning and Ventilating Systems.

I. NFPA 90B: Standard for the Installation of Warm Air Heating and Air Conditioning Systems.

J. SMACNA-DCS: SMACNA HVAC Duct Construction Standards, 3rd Edition.

K. UL 181: Underwriter Laboratories Factory-Made Air Ducts and Air Connectors.

L. UL 181A: Underwriter Laboratories Closure Systems for Use With Rigid Air Ducts.

M. UL 181B: Underwriter Laboratories Closure Systems for Use With Flexible Air Ducts and Air Connectors.

PART 2 PRODUCTS

2.01 ACCEPTABLE MANUFACTURERS

A. Products shall comply with Section 20 05 00, Paragraph 2.01, Acceptable Manufacturers.

B. Sheet Metal: All domestic manufacturers.

C. Spin-in Fittings and ATTO: Sheet Metal Connectors Inc., United McGill, Royal Metal Products, Airflow Products Inc.

D. Gasketing: Preson, Insulfab, Duraco.

E. Duct Sealant and Tape: Carlisle (Hardcast), Ductmate, Benjamin Foster, Grace Construction Products, United McGill, Polymer Adhesives Sealant Systems, RCD Corporation, Nashua, 3M.

F. Flexible Duct: Flexible Technology Inc., JP Lamborn Co.; Hart & Cooley, Thermaflex.

G. Acoustical Duct Lining: Johns-Manville.

2.02 GENERAL MATERIALS

A. Ducts: Construct of galvanized sheet steel, suitable for lock forming without flaking or cracking, conforming to ASTM A653 and A924, having a zinc coating of 0.90 ounces total per square foot for both sides of a sheet, corresponding to coating G90.

B. Fasteners: Steel construction, electroplated zinc coated, having strength properties adequate for the application, compatible with materials being joined, and in accordance with SMACNA-DCS. Where exposed to corrosive conditions shall be of Type 304 or 316 stainless steel. Type to meet duct pressure class and duct leakage requirements. Where used for the support and anchorage of ducts shall comply with Section 20 05 29, with independent test reports regarding strength.

C. Spin-in Fittings: Factory fabricated of galvanized steel with die-formed mounting groove and damper with raised damper quadrant where ducts are to be insulated. Collar length for flexible duct attachment shall be at least 2" long.

D. Air-Tight Take-Off Fittings (ATTO): Factory fabricated branch duct connector, of galvanized steel. Flange shall be 1-1/2” wide with 1/8” self-adhesive gasket and pre-drilled fastener holes. Collar length for flexible duct attachment shall be at least 2” long. Where used on round duct mains, shall be saddle type appropriately sized for main duct diameter.

E. Draw Bands:

1. Metal: Worm gear type clamp, constructed of galvanized steel, stainless steel, or aluminum; minimum 1/2-inch wide band; suitable for 200 pound loading.

2. Non-Metal: Nylon “zip-tie” with self-locking ability, designed for flexible duct usage, minimum 1/4 inch wide, rated for 175 pound load, suitable for temperatures from 0 to 185 deg F; listed per UL181B and labeled “UL181B-C”.

F. Gasketing: Vinyl nitrile, vinyl neoprene, or neoprene nitrile PVC blend; designed for HVAC use with size to suit the application having minimum 1.5-inch width at

equipment roof curb applications. Fire hazard rating not to exceed 25 for flame spread and 50 for smoke development per ASTM E 84.

G. Duct Sealant/Mastic: Water based duct sealant, listed per UL 181B-M and UL 181A-M, suitable for indoor and outdoor use. Fire resistant with a flame spread rating of 5 or less, and a smoke developed rating of 0. Sealant shall be resistant to ultraviolet radiation and ozone. Fiberglass mesh shall be minimum 0.006-inches thick, with minimum 9x9 weaves per inch, and 2-inch width; for use with mastic in sealing ductwork. Sealant system shall be suitable for duct system pressure class and materials used with. Carlisle Hardcast “Versa-Grip 181”.

H. Foil Tape: Foil back adhesive tape, listed per UL181A-P and UL181B-FX, with listing labeled on tape outer foil face. Minimum 3-inch width for metal-to-metal applications; minimum 2-inch width for flexible duct applications. 3M No. 3340 or Nashua No. 324A.

2.03 DUCT FABRICATION

A. Duct Gauge and Reinforcement: Shall be as shown in SMACNA-DCS according to the pressure classification of the system and the duct dimensions; with heavier gauge duct used as required to minimize duct reinforcement to suit space available and other project constraints.

B. Joints and Seams: Construct in accordance with SMACNA -DCS, code requirements, and these specifications (more stringent governs). Ducts shall be constructed and sealed so that the leakage criteria is not exceeded. Round ducts shall be the spiral seam type; except that branch ducts to individual air inlets/outlets less than 16" diameter may be of other types as allowed by SMACNA-DCS. Coordinate joint spacing with duct reinforcement requirements so that transverse joints having the required stiffness may be incorporated in the reinforcement spacing schedule. Round duct transverse joints shall be made with beaded sleeve joints or flanged connections in accordance with SMACNA-DCS; except that branch ducts to individual air inlets/outlets less than 16" diameter may use other joining methods as a allowed by SMACNA-DCS.

C. Elbows and Tees: Shall be long-radius type with a center-line radius not less than 1-1/2 times the width or diameter of the duct. Where space does not permit the use of long-radius elbows, short-radius or square elbows with turning vanes may be used. Elbows in round duct systems with duct pressure class above 2-inches shall be stamped type, welded segmented type, or standing seam segmented type.

D. Transitions: Increase duct sizes gradually. Transitions for diverging air flow shall be made with each side pitched out not more than 22.5 degrees. Transitions for converging air flow shall be made with each side pitched in not more than 30 degrees. Except that eccentric transitions for round to flat oval may have up to a 45 degree pitch.

E. Branch Connections: Shall comply with SMACNA-DCS, and as required herein.

1. Rectangular-to-Rectangular: Rectangular take-off with 45 degree angle on “inside” of take-off, minimum 4" length. Reference SMANCA-DCS Figure 4-6. Close corner openings.

2. Rectangular-to-Round:

a. Serving Individual Air Inlet/Outlet: Spin-in type connector or air-tight take-off (unless a different fitting type is specifically noted).

b. Serving Branch Duct: Rectangular to round transition, with maximum degree pitch as specified for transitions. Rectangular end size shall have free area no less than round end. Rectangular connection to rectangular main shall be made as specified for “Rectangular-to-Rectangular” connections.

3. Round-to-Round:

a. Air-tight take-off or constructed in accordance with SMACNA-DCS and recognized professional practices.

4. Other Connections: In accordance with SMACNA-DCS and recognized professional practices.

F. Ductmate Systems:

1. Rectangular Duct: Transverse duct joints may be made with Ductmate System, or approved equal. System shall consist of companion flanges of 20 gauge galvanized steel with an integral polymer mastic seal; corner pieces of 12 gauge G90 galvanized steel; 20 gauge G90 galvanized cleats; closed cell, high density gasket type; and galvanized carriage bolts with hex nuts. The flanges shall be securely fastened to the duct walls using self-drilling screws, rivets or spot welding. Fastener spacing shall be as recommended by the manufacturer for the size of duct and the pressure class. The raw duct ends shall be properly seated in the integral mastic seal. A continuous strip of gasket tape, size 1/4" x 3/4", shall be installed between the mating flanges of the companion angles at each transverse joint; and the joint shall be made up using 3/8-inch diameter x 1-inch long plated bolts and nuts. Galvanized drive-on or snap-on cleats shall be used at spacing recommended by the manufacturer.

2. Round Duct: Transverse duct joints may be made with Ductmate “Spiralmate” system, or approved equal. System shall consist of galvanized steel round connector flanges (fitting inside each duct section to be joined) and an exterior galvanized steel closure ring with tightening bolt to form an airtight duct connection and join flanges together. Duct connector flanges shall have non-hardening integral mastic to seal between flanges and duct, and a neoprene gasket to seal flange faces.

G. Lined Ductwork:

1. Rectangular Ducts: Contractor Fabricated ductwork with interior duct lining. Duct fabrication and liner installation shall comply with NAIMA-DLS. Lining material shall comply with paragraph titled “Duct Lining” in this specification section.

2. Round and Oval Ducts: Shall consist of acoustic insulation in between a perforated interior duct liner and solid exterior duct. Acoustic insulation shall be 1-inch thick, except where noted to be greater. Duct sections shall connect by mechanical means to maintain positive concentricity of liner with duct. All fittings and transitions shall have perforated inner liner (except where noted otherwise). Lining material shall comply with paragraph titled “Duct Lining” in this specification section. United McGill

"Acousti-k27" (or approved).

2.05 FLEXIBLE DUCT

A. Type: Factory insulated fully lined flexible duct.

B. Construction: Double-ply neoprene coated polyester fabric hose, reinforced with a steel wire helix. Black color. Fire hazard rating not to exceed 25 for flame spread and 50 for smoke development, as tested by ASTM E84.

C. Thermal Characteristics: Certified thermal resistance “R” of 4.2 Hr-SF-deg F/Btu, rated in accordance with ADC-FLEX. Except where duct is installed in an unconditioned area (and where required by code) provide certified thermal resistance “R” of 8 Hr-SF-deg F/Btu, rated in accordance with ADC-FLEX.

D. Working Pressure: As required to suit maximum pressure to be encountered on system, but no less than 4-inch wc positive, 0.5-inch wc negative.

E. Length: Shall not exceed 8 feet where used on duct systems with a pressure class of 2-inches and less; maximum 5 feet length on higher pressure class systems.

F. Code Compliance: Comply with code and applicable standards; including NFPA 90A, NFPA 90. Shall be UL listed and labeled as a Class 1 connector per UL 181.

2.06 DUCT LINING

A. Material: Flexible, inorganic glass fiber material, bonded with thermosetting resin, maximum thermal conductivity of 0.24 Btu-inch/hr-sq. ft.-degree F at 75 degrees F, coated to prevent erosion, conforming to NAIMA-DLS and exceeding that standard as specified herein. Suitable for air temperatures to 250 degrees F, and duct velocities to 6000 feet per minute. Surface shall be coated with an acrylic coating having anti-microbial agents and factory applied edge coating. Johns-Manville “Permacote Linacoustic” (or approved).

B. Thickness: Lining shall be 1-inch thick except where noted otherwise.

C. Adhesives and Fasteners: Shall conform to NAIMA-DLS, and as suitable for the duct liner material and ductwork.

D. Fungi and Bacteria Resistance: Conform to ASTM C 1338 and ASTM G21 for fungi resistance and ASTM G 22 for bacteria resistance.

2.07 CASING FABRICATION

A. Construct casing of galvanized panels joined by standing seams on outside of casing riveted or bolted on approximately 12 inch centers. Reinforce with steel angles and provide diagonal bracing. Tightly fit all joints and connections and seal with sealant.

B. Provide 3 inch high reinforced concrete curb for casing walls and floor mounting. At floor, rivet panels on 8 inch centers to angles. Where floors are acoustically insulated, provide liner at 18 gauge galvanized expanded metal mesh, turned up 12 inch at sides with sheet metal shields.

C. Reinforce door frames with steel angles tied to horizontal and vertical plenum supporting angles. Install hinged access doors as indicated, or required for access to equipment for cleaning and inspection.

D. Fabricate acoustic casing of galvanized steel. Provide 16 gauge back facing and 22 gauge perforated front facing with 3/32 inch diameter holes on 5/32 inch centers. Construct panels 3 inch thick packed with 4.5 lb/cu ft minimum glass fiber media, on inverted channels of 16 gauge.

PART 3 EXECUTION

3.01 DUCTWORK INSTALLATION

A. General: Install all ductwork with all accessories and connections to provide complete and operable duct systems, in accordance with plans and specifications. See Section 20 05 29 for hangers and supports. Provide quality assurance review of all drawings prior to beginning work (see paragraph titled Quality Assurance, this specification Section and see Section 20 05 00). Provide duct and plenum sizes and locations as shown on the drawings; except as adjusted for field conditions and work of other trades, and with prior approval of the Engineer. See Section 20 05 00 for offsets and transitions to be included in project.

B. Coordination: The Contractor shall fully coordinate the work of all trades to avoid interferences and conflicts. Due to the extremely tight spaces in portions of the building, the Contractor shall coordinate duct reinforcement spacing and supports with other trades as necessary to avoid interferences. In addition, the Contractor shall select duct gauge and reinforcement types to avoid interferences. Changes required due to lack of coordination between trades, improper spacing or selection of hangers, or improper duct gauge and reinforcement selection, shall be done at no additional cost to the owner.

C. Field Measurements: Prior to fabricating any duct materials, the Contractor shall field measure all areas where ducts will be installed to verify room available and all offsets and fittings required. Field verify connection sizes and locations to equipment, louvers, and similar items.

D. Workmanship: All work shall comply with code, SMACNA-DCS, and other applicable standards. Ducts shall be installed level (unless noted otherwise) and in neat lines with the building construction using best professional practices.

E. Exposed Ducts:

1. All ducts are to be installed concealed unless indicated otherwise. Ducts that are exposed shall be carefully fabricated, stored, and installed for best appearance. All dents, dings, scratches and other damage shall be repaired for a high quality finished look; all dirt, debris, labels, stickers, lettering, and marks removed; and the duct completely cleaned. Any sealant shall be cleaned to form a straight and even seam adjacent to joints, have no overlap onto duct areas not needing sealant, and have all excess sealant removed (mask off adjacent areas as necessary).

2. Outdoor exposed ducts shall have “hat” type channels installed over all joints (top and sides) to prevent entry of water.

F. Flexible Duct: May only be used where specifically shown on the plans. Attach flexible duct inner core to sheet metal duct (or connector) with draw band. For insulated type, pull insulation and outer jacket completely over the inner core (at

the connection to the sheet metal duct) with outer jacket covering the inner core and tucked back at its end to provide a continuous vapor barrier cover; install draw band to secure the outer jacket and insulation. Use metal type draw bands on duct systems where duct pressure class exceeds 3-inches or where temperature or other conditions do not allow the non-metal type and where indicated; use type of metal suitable for the conditions without corrosion or other deterioration. Install flexible duct with a centerline turning radius not less than one duct diameter. Where this turning radius cannot be maintained with the flexible duct use sheet metal elbows or (at air inlets/outlets) provide a plenum having a side connection.

G. Spin-in Fittings/ATTO's: May be used for branch ducts to individual outlets only. Apply a bead of duct sealant to all spin-in fittings where fitting seals against sheet metal duct.

H. Sealing:

1. General: Use materials listed and approved for the specific application. Foil tape may only be used at duct connections to air inlets/outlets (unless specifically noted otherwise). Clean surfaces to be sealed of moisture and all contaminants. Seal joints in accordance with SMACNA-DCS, sealant manufacturer's instructions, and UL 181.

2. Ductwork: Seal to meet duct leakage criteria as follows:

a. Ducts with pressure Class 3" and greater: Seal Class A.

b. Ducts with pressure Class 2": Seal Class B.

c. Ducts with pressure Class 1" and less: Seal Class C.

3. Flexible Duct: Coat connection of flexible duct to metal duct with duct sealant prior to installing the flexible duct.

4. Air Inlets/Outlets: Seal duct connections (including "cans" or plenums) at air inlets and air outlets with duct sealant or foil tape; except at louvers and exposed ducts only sealant shall be used.

5. Exterior Ductwork: Special attention and effort shall be applied to the sealing of exterior ductwork to prevent any entry of water. Sealant shall be applied to all seams and joints prior to assembly in order to provide a layer of sealant which is continuous through the joint or seam. Additional sealant shall then be applied to the exterior of the joint or seam to ensure a weathertight closure. Any leakage or damage from water leakage into duct or building shall be repaired at no additional cost to the Owner.

I. Ductmate: All "Ductmate" and similar systems shall be installed in strict accordance with manufacturer's instructions.

J. Protective Caps: Provide temporary sheetmetal caps or heavy visqueen covers over all open portions of ductwork to prevent debris, dirt, and dust from entering the ductwork. Such covers shall be installed at the end of each work shift, and shall remain in place until all work activities or events that may cause duct contamination will no longer occur.

3.02 ACOUSTICAL DUCT LINING INSTALLATION

A. General: Install acoustical duct lining in ducts to extent shown on drawings,

covering all interior surfaces. Round ducts shall use factory fabricated double-wall ducts as specified.

B. Installation: Installation shall comply with NAIMA-DLS and these specifications. The liner shall be cut to assure tightly butted joints.

C. Liner Attachments: The duct liner shall be applied with a 100% coverage of adhesive. Mechanical Fasteners shall be installed flush with the liner surface, and shall be spaced in accordance NAIMA-DLS.

D. Horizontal Duct Runs: Tops of ducts over 12" wide and sides of duct over 16" high shall have liner additionally secured with mechanical fasteners.

E. Vertical Duct Runs: Any side of duct over 12" in size shall have liner additionally secured with mechanical fasteners.

F. Exposed Edges: All joints, exposed edges and any damaged areas of the liner, shall be heavily coated with fire resistant adhesive/mastic.

G. Metal Nosing: Install metal nosings on the leading edges of the liner in ducts where the velocity exceeds 4000 feet per minute.

3.03 PREPARATION FOR SERVICE

A. Cleaning: All ducts shall be wiped or blown clean of all dust and debris prior to the installation of grilles or diffusers. Notify the Engineer to allow for an inspection prior to installing grilles or diffusers.

B. Contaminated Ducts: Where ducts have been contaminated by dirt or debris during the construction process, the affected duct systems shall be cleaned by an independent firm specializing in the vacuum cleaning of ductwork. All costs associated with such cleaning shall be the responsibility of the Contractor.

3.04 DUCT PRESSURE TESTING

A. Tested Systems: All supply air duct systems shall be tested.

B. Duct Pressure Class > 2-inches:

1. Cap all outlets temporarily to isolate the portion of the system being tested.

2. Use portable blower with volume adjustment and a calibrated orifice for determining cfm of air being added to ductwork. Maintain duct system rated pressure in duct; examine each section at this pressure, and seal all observable leaks so that leakage during final testing will be at or below maximum permissible leakage.

3. Maximum Permissible Leakage: See “Quality Assurance” paragraph, Part 1 of this specification section.

4. Final test of each section shall be witnessed by the Architect/Engineer or Owner's representative. Give Architect/Engineer at least 7 days prior notice before such test.

5. Test Data: Record data of test results of final test only, including sketch or diagram of tested section, computation of total system cfm, allowable leakage and actual leakage found during test. Submit two copies to Architect/Engineer.

C. Duct Pressure Class ≤ 2-inches: Air balancers readings will be used to determine percent leakage of ductwork. Where leakage exceeds allowable by 25% or less, sealing shall be provided at all potential leak spots. Where leakage exceeds allowable by more than 25%, the system shall be re-sealed and the Sheetmetal Contractor shall pay the Balancer to re-measure and determine the new leakage rate.

3.05 COMMISSIONING

A. The Products referenced in this section are to be commissioned per Division 01 and Section 20 08 00 - Commissioning. The Contractor has specific responsibilities for scheduling, coordination, startup, test, development, testing and documentation. At a minimum, the Contractor shall provide a documented and signed record to verify that all equipment and systems installed under this contract have been inspected and functionally tested to verify full compliance with the contract specifications. In many cases, this shall require the Contractor to create or otherwise provide procedures and checklists for approval by the Commissioning Consultant prior to the start of functional testing. Reference Division 01 and Section 20 08 00 and coordinate all commissioning activities with the Commissioning Consultant.

END OF SECTION

SECTION 23 33 00 – DUCT ACCESSORIES

PART 1 GENERAL

1.01 RELATED DOCUMENTS

A. Drawings and general provisions of the Contract, including General and Supplementary Conditions and Division 00 and Division 01 Specification Sections, apply to this Section.

B. Requirements of Section 20 05 00 apply to this Section.

1.02 WORK INCLUDED

A. Manual Dampers

B. Backdraft Dampers

C. Turning Vanes

D. Flexible Connectors

E. Duct Access Doors

F. Air Measuring Units

G. Duct Thermometers

H. Sound Attenuation Materials

1.03 QUALITY ASSURANCE

A. General: Comply with Section 20 05 00.

B. Workmanship: Construction and installation of all duct accessories shall comply with applicable SMACNA-DCS, and exceed those standards as noted.

C. Fire dampers, combination fire/smoke dampers, and smoke dampers shall be UL listed.

1.04 SUBMITTALS

A. General: Submittals shall comply with Section 20 05 00.

B. Product Data: Submit product information on all items to be used.

C. Sound Attenuators: Submit dynamic insertion loss and pressure drop data for all sound attenuators. Submit listing of all sound attenuators by unit served, airflow application, cfm, size, velocity, and pressure drop.

1.05 REFERENCES

A. AMCA 500D: Laboratory Methods for Testing Dampers for Rating.

B. SMACNA-DCS: SMACNA HVAC Duct Construction Standards, 3rd Edition.

C. UL 555S: Smoke Dampers.

D. UL 555: Fire Dampers.

E. UL 555C: Ceiling Dampers.

PART 2 PRODUCTS

2.01 ACCEPTABLE MANUFACTURERS

A. Products shall comply with Section 20 05 00, Paragraph 2.01, Acceptable Manufacturers.

B. Manual Damper Hardware: Duro-Dyne, Young Regulator Co., Ventfabrics, Krueger.

C. Backdraft Dampers: Air Balance, Ruskin, Greenheck.

D. Turning Vanes: Duro-Dyne, Aero-Dyne, Oil Capital Sheet Metal, Airsan.

E. Flexible Connections: Ventfabrics, Duro-Dyne Elgen.

F. Duct Access Doors: National Controlled Air, Ventfabrics, United-McGill, Kees, Ruskin, Vent Products.

G. Air Measuring Units: Cambridge Filter Corp., Monitor Corp.

H. Building Access Doors: J.R. Smith, Zurn, Acudor, Elmdoor, Kees, J.C. Industries.

I. Duct Thermometers: Weksler, Weiss.

J. Sound Attenuators: Industrial Acoustics, Environmental Air Products, DynaSonics.

2.02 MANUAL DAMPERS

A. Type: Manually adjustable volume dampers.

B. Blades: Damper blades shall be fabricated of galvanized steel or stainless steel (unless a specific material is indicated), two gages heavier than duct in which installed, and in accordance with SMACNA-DCS. Maximum blade width 12 inches; fabricate multi-blade dampers with opposed blade pattern for ducts larger than 12" x 48".

C. Regulators: Damper regulator sets shall have quadrant dial regulator with locking nut, square end bearing one side, and spring round end bearing other side (small sizes) or open end square bearing (larger sizes), axis of blade the long dimension. Multiple blade dampers shall have individual quadrants for each blade or one quadrant with interconnected blades. Regulator sets shall be Duro-Dyne model numbers (or approved equal) as follows:

Max. Blade Dimension	Duro-Dyne Regulator Set	Shaft Size
10" and less	KS-145, 145L	1/4"
11" to 14"	KSR-195, 195L	3/8"
15" to 23"	SRS-388, SB-138, KP105	3/8"
24" and larger	SRS-128, SB-112, KP105	1/2"

D. Concealed Regulator: For remote damper adjustment with finished ceiling appearance. Shall consist of self-locking regulator of cast alloy construction (with serrated core, spring washer, housing, indicator, lock nut) cast into a cylindrical housing for flush ceiling installation. Housing cover shall be of steel construction, shall telescope into the regulator housing to be flush with the finished ceiling, and be secured to the housing with two screws. Provide with extension rods, linkages, miter gears, and all accessories as needed for proper damper operation. Plain Finish. Ventfabrics No. 666, 667 or Young Regulator Co. No.

301 (or approved equal).

D. Extractor Fittings: Galvanized steel construction, 24 gauge steel blades on 2 inch centers, with worm gear operator for adjustment through face of grille. Krueger EX-88 (or approved equal).

2.03 MANUAL DAMPERS – CABLE OPERATED

A. General: Cable operated system of dampers and rack and pinion type controller, made for use to allow remote damper adjustment.

B. Round Dampers: Constructed of heavy duty galvanized steel duct with rolled-in stiffening beads for rigidity. Damper minimum 20 gauge galvanized steel blade secured with 1/2” diameter steel shaft and high strength Teflon bushings requiring no lubrication. Damper shall include all necessary hardware to ensure compatibility with remote cable control system. Young Regulator Model 5020-CC (or approved).

C. Rectangular Dampers: Opposed blade type constructed of 0.050 minimum heavy duty extruded aluminum frames and blades. Damper blades to include individual blade bushings; damper blades shall rotate between a matched pair of formed and punched 306 stainless steel connecting slide rails that facilitate smooth blade movement and ensure alignment. All necessary hardware to ensure compatibility with remote cable control system shall be included. Young Regulator Model 830A-CC series (or approved).

D. Cable Control: Cable to consist of 0.054” stainless steel cable encapsulated in 1/16” flexible galvanized spiral wire sheath. Control hardware shall be designed for use with damper to be controlled with wall mounted. Control hardware shall include 14 gauge steel rack and pinion gear drive, controls shaft shall be flatted 1/4" diameter with 265-degree rotation provided linear travel capability. Where ceiling access is indicated provide with concealed regulator assembly; wall mounted shall have exposed knob control, with position indicator. Young Regulator Model 270-275 or 270-301 or 270-700 to suit application (or approved).

2.08 BACKDRAFT DAMPERS

A. Type: Airflow and gravity operated backdraft dampers. Greenheck WD-100, WD-300, WD-400 (or approved equal).

B. Frame: Shall be constructed of minimum 18 gauge galvanized steel or stainless steel or minimum 0.063 thick 6063T5 extruded aluminum (unless a specific material is indicated).

C. Blades: Shall be constructed of minimum 0.025" thick formed aluminum, or stainless steel (unless a specific material is indicated), with extruded vinyl edge seals. Seals shall prevent any noise due to damper opening/closing. Bearings shall be synthetic polycarbonate or acetal type. Damper linkage shall be with aluminum or galvanized steel tiebar. Dampers with vertical airflow shall be spring assist type.

D. Configuration: For horizontal or vertical airflow as indicated on plans.

A. Performance:

1. General: Dampers shall be tested in accordance with AMCA standards.

2. Pressure Drop: Not to exceed 0.05 inch w.g. at 250 fpm with vertical airflow; and not to exceed 0.07 inch w.g. pressure drop for horizontal airflow.

3. Leakage: Dampers used to prevent the entry of outdoor air shall have air leakage no greater than 20 cfm/sf at 1-in w.g. where not less than 24-inches in any dimension, and no greater than 40 cfm/sf where less than 24 inches in any dimension;, when tested in accordance with AMCA 500D.

4. Pressure and Velocity Ratings: Shall suit maximum velocity and pressure differential to which dampers will be subjected; but no less than 1500 fpm and 1.0-in w.g. differential pressure.

2.09 COUNTERBALANCED BACKDRAFT DAMPERS - LOW PRESSURE DROP

A. Type: Airflow and gravity operated backdraft dampers with adjustable counterbalance weight. Ruskin CBD6.

B. Frame: Shall be constructed of minimum 18 gauge galvanized steel or stainless steel or minimum 0.125-inch thick 6063T5 extruded aluminum (unless a specific material is indicated).

C. Blades: Shall be constructed of minimum 0.07-inch thick extruded aluminum, or formed stainless steel (unless a specific material is indicated), with extruded vinyl edge seals. Seals shall prevent any noise due to damper opening/closing. Bearings shall be synthetic polycarbonate or acetal or zytel type. Damper linkage shall be with aluminum or galvanized steel tiebar. Counterbalance weights shall be attached to blades, be of galvanized steel construction, and be adjustable.

D. Configuration: Horizontal or vertical airflow as indicated on plans.

E. Performance:

1. General: Dampers shall be tested in accordance with AMCA standards.

2. Temperature Rating: -40 to 200 degrees F.

3. Closed Position: Withstand maximum back pressure of 16 inches w.g.

4. Open Position: Withstand maximum air velocity of 2,500 feet per minute.

5. Operation of Blades: Start to open at 0.02 inch w.g.; fully open at 0.05 inch w.g.

6. Pressure Drop: Maximum 0.025 inch w.g. at 700 feeet per minute, maximum 0.15 inch w.g. at 1,500 feet per minute.

7. Dampers used to prevent the entry of outdoor air shall have air leakage no greater than 20 cfm/sf at 1-in w.g. where not less than 24-inches in any dimension, and no greater than 40 cfm/sf where less than 24 inches in any dimension; as tested in accordance with AMCA 500D.

F. Depth of Operation: Depth required to operate shall not exceed 10-inches.

2.11 TURNING VANES

A. Type: Galvanized steel turning vanes to guide airflow through duct elbows to minimize pressure drop.

B. Construction: Turning vanes shall comply with SMACNA-DCS. Vanes shall be fabricated of minimum 26 gauge galvanized steel; rails shall be fabricated of minimum 24 gauge galvanized steel. For duct widths less than 12 inches, vanes may be single wall construction; for widths 12” and greater, vanes shall be double wall "airfoil" type.

C. Spacing: Turning vanes shall be equally spaced in accordance with SMACNA-DCS, parallel to each other, and securely attached to runners.

D. Unequal Elbows: For elbows where the inlet and outlet dimensions are not the same, modify vane shape or angle to provide optimum turning.

2.12 ACOUSTICAL TURNING VANES

A. Type: Double-wall perforated acoustical turning vanes. Airsan “Acoustiturn” (or approved equal).

B. Construction: Shall comply with SMACNA-DCS. Vanes shall be airfoil shape, double-wall factory fabricated of 14 gauge aluminum, with inner wall perforated metal, and filled with fiberglass media. Rails shall be fabricated of minimum 24 gauge galvanized steel construction.

C. Spacing: Turning vanes shall be equally spaced in accordance with SMACNA-DCS, parallel to each other, and securely attached to runners.

D. Unequal Elbows: For elbows where the inlet and outlet dimensions are not the same, modify vane shape or angle to provide optimum turning.

2.13 FLEXIBLE CONNECTORS

A. Type: Flexible fabric type connectors, to provide vibration isolation at equipment duct connections and to allow for movement in duct systems.

B. Fabric:

1. Width: Minimum 3” wide except at equipment 3 hp or larger with external vibration isolators fabric shall be minimum 6” wide.

2. Indoor Applications: Flexible woven glass fiber fabric with neoprene coating, minimum 22 oz/sq. yard, 450 lbs x 450 lbs tensile strength.

3. Outdoor Applications: Flexible woven glass fiber fabric with hypalon coating, ozone resistant, 24 oz/sq. yard, 225 lbs x 275 lbs tensile strength.

C. Metal Collars: Minimum 24 gauge galvanized steel 3” wide metal edge connectors, each side of fabric, connected to fabric by folded over metal seam.

D. Temperature Rating: Suitable for temperatures from -40 to 200 deg F.

E. Fire/Smoke Rating: Flame spread rating not over 25, and smoke developed rating not higher than 50; complying with IMC requirements and NFPA standards.

2.14 DUCT ACCESS DOORS

A. Construction: Access doors shall be of double wall construction, made with minimum 24 gage galvanized steel, tight fitting, with sealing gasket, and cam locks (or may be hinged type with latches).

B. Size:

1. General: Access doors shall be of sufficient size so that items concealed in duct can be serviced and inspected, and shall be adequately sized to allow complete removal of the item being served (where removal cannot be made without disturbing fixed ductwork).
2. Minimum size: Doors shall be minimum 14" x 14". Where duct size will not accommodate this size door, the doors shall be made as large as practicable.
3. Large Sizes: Doors larger than 14" x 14" shall have a minimum of 4 cam locks (or where hinged type is used, have a minimum of two (2) latches).

C. Insulation: Doors in insulated ducts shall be insulated type, with minimum 1 inch thick fiberglass insulation.

D. Round Ducts: Access doors on round ducts shall use either lined rectangular tap off with rectangular access door or curved insulated access door (for insulated duct); or curved type un-insulated access door (for un-insulated duct).

2.15 BUILDING ACCESS DOORS

A. Type: Hinged lockable steel access doors, for wall or ceiling installation.

B. Construction: Minimum 16 gauge frame and 14 gauge door, concealed hinge, cam and cylinder lock, anchoring provisions, and 1” wide frame to conceal rough building opening. Provide of 18-8 stainless steel construction with No. 4 finish where used in restrooms, locker rooms, kitchens, and similar "wet" areas. Provide of steel construction with prime coated finish in other areas.

C. Size: Size shall be 12" x 12" (unless indicated otherwise) but shall be large enough to allow necessary access to item being served and sized to allow removal of the item (where access door is the only means of removal without disturbing fixed construction).

D. Fire Rating: Door shall maintain fire rating of element installed in; reference drawings for required rating.

E. Keys: Access doors shall all be keyed alike. Provide two (2) keys for each door.

2.16 AIR MEASURING UNITS

A. Type: Multiple pitot tube type for measuring velocity pressure and corresponding airflow.

B. Construction: Units shall have 16 gauge (minimum) galvanized steel casing; copper or aluminum pressure sensing tubing; and 4 inches minimum depth aluminum air-straightening grid.

C. Airflow Sensing: Air flow sensing shall be by pitot tube; maximum of 144 square inches per static pressure sensor; maximum of 36 square inches per total air pressure sensor; sensors shall measure equal areas; sensors in circular ducts shall measure equal annular areas; sensors shall be interconnected to give average reading; output shall be suitable for control purposes as required.

D. Air Flow Meters: Diaphragm actuated differential pressure gauge, mounted on metal panel, calibrated to read cfm and fpm. Gauge shall be labeled indicating the fan or system being measured, and the design cfm.

E. Free Area: Units shall have free area at least 97% of connecting duct size area.

2.17 DUCT THERMOMETERS

A. Type: Dial bi-metal.

B. Construction: Minimum 3-inch diameter corrosion protected case, remote or direct type bulb as required, plus or minus 1% (of scale range) accuracy, white face with black digits graduated in 2 degrees F increments. Thermometer wells of the separable socket-type shall be provided for each thermometer with direct-type bulb.

C. Ranges:

1. Sensing Outdoor Air: -20 to 120 degrees F.

2. Sensing Supply Air: 30 to 130 degrees F.

3. Sensing Return Air: 30 to 130 degrees F.

2.18 SOUND ATTENUATION MATERIALS

A. Sound Barrier Wrapping Materials: Peabody Kinetics Model KNM-100F1 (1 lb./SF) loaded vinyl limp mass barrier material, with a STC of 27 or better.

B. Damping Compound: Peabody Kinetics Type KDC-E-162 viscoelastic emulsion damping material.

2.19 SOUND ATTENUATORS - STANDARD

A. Type: Duct mounted rectangular and tubular packed type acoustic silencers. IAC “LFM”, (or approved equal).

B. Construction: Shall be constructed of galvanized steel, with internal streamlined perforated baffles, packed with fiberglass acoustic insulation. Entry and exit shall have radiused edges at baffles.

C. Size: Size and shape to match ducts connected to (unless noted otherwise), minimum 3 feet long (unless noted otherwise).

D. Acoustic Performance: Shall be rated in accordance with ASTM E 477 with air flowing through the attenuator. Sound attenuator (3 foot length) shall have minimum Dynamic Insertion Loss (DIL) performance at 2000 feet per minute face velocity as follows (forward flow noted +; reverse flow noted -):

Octave Band	Hz	-2000 DIL	+2000 DIL
1	63	7	5
2	124	9	7
3	250	18	15
4	500	21	18
5	1000	19	17
6	2000	14	12
7	4000	11	10
8	8000	10	10

E. Pressure Drop: Pressure drop at 1000 fpm shall not exceed 0.25 inches w.g. (for a 3 foot long unit).

F. Application: All areas, except where the “Low Pressure Drop” type are indicated to be used.

2.22 DUCT SMOKE DETECTORS

A. Supplied by Division 26.

PART 3 EXECUTION

3.01 MANUAL DAMPERS

A. General: Dampers shall be fabricated and installed in accordance with SMACNA-DCS requirements for volume dampers.

B. Locations: Install dampers at locations shown on the drawings in branch ducts to all air inlets/outlets, and at all other locations as required by the Balancer to allow for the balancing of the system. Locate dampers at a point where the damper is most accessible; orient damper regulator for best access.

D. Non Accessible Dampers: Provide flush-mounted concealed type damper quadrants for ducts concealed in walls or non-removable ceilings and where a remote damper operator has been indicated.

E. Initial Setting: Set and lock all dampers in the full open position prior to balancing.

F. Extractor Fittings: Provide where indicated on the plans and at wall type inlets/outlets where such outlets cannot be served by a manual damper in the branch duct.

G. Identification: Provide orange surveyor’s tape, approximately 18” long tied to each damper regulator (except not required on dampers in ducts exposed to view in finished areas).

3.04 BACKDRAFT DAMPERS

A. General: Install in accordance with manufacturer's instructions.

B. Application: Use counterbalanced type at all non-fan powered building exhausts and reliefs; all others shall be the standard type.

C. Adjustments: Adjust counterbalanced backdraft dampers to be open at 0.07” building pressure (unless noted otherwise), or as necessary for proper space pressurization and building air balance. Coordinate work and settings with air balancer.

D. Access Doors: Provide access doors to backdraft dampers, except that where damper is installed immediately behind a ceiling or wall grille, and is accessible by removing this grille, an access door is not required.

3.05 TURNING VANES

A. General: Install turning vanes in all duct elbows and “T” fittings, and at locations shown on the drawings.

B. Attachment: Securely attach turning vane runners to ductwork.

C. Acoustic: Use acoustic type turning vanes on duct systems serving performing arts, theater, libraries, and similar spaces requiring low noise levels.

3.06 FLEXIBLE CONNECTORS

A. General: Provide flexible connectors at all duct connections to all equipment,

where ducts of dissimilar metals are connected, and where shown on the drawings. Except that flexible connectors are not required on internally spring isolated fans where the fan is located in a separate mechanical room and a flexible connector has not been shown.

B. Round: For round ducts, the flexible material may be secured by zinc-coated, iron clinch type draw bands directly to adjoining duct; or with normal duct joining methods and using metal collars furnished with flexible connectors.

C. Slack: Install flexible connections with sufficient slack to permit 1 inch of horizontal or vertical movement of ducts or equipment at flexible connection point without stretching the flexible material. At building expansion joints install sufficient flexible material to allow for 2 inch movement in any direction; provide two flexible connectors separated by a 12 inch section of duct.

D. Outdoors: Where installed exposed to outside weather, provide a galvanized "hat" channel protecting top and vertical stretches of flexible connector from sunlight and weather.

3.07 DUCT ACCESS DOORS

A. General: Provide duct access doors at all automatic control dampers, fire dampers, fire/smoke dampers, smoke dampers, backdraft dampers, all duct coils, thermostats, filters, control devices, and any other components in the duct system that require service or inspection. Coordinate with Section 23 09 33/Control Contractor to confirm quantity and location of control devices.

B. Return and Exhaust Ducts: Provide access doors every 20 feet in return and exhaust air ductwork as required by NFPA 90.

C. Size and Location: Access doors shall be of sufficient size and so located so that the concealed items may be serviced and inspected or completely removed and replaced.

3.08 BUILDING ACCESS DOORS

A. General: Provide access doors in walls, floors, ceilings, etc. as indicated on the drawings and where needed to provide service access or maintenance to duct access doors, backdraft dampers, damper actuators, automatic dampers, coils, control devices, fans, HVAC equipment and similar items.

B. Coordination: Consult architectural drawings and coordinate location and installation of access doors with trades which are affected by the installation.

3.09 THERMOMETERS

A. Thermometers shall be provided in the main supply, return, and outside air ducts to and from each air handling unit and where indicated or specified and shall be so located as to be easily read from the operating floor. Thermometers shall be duct-mounting or remote type.

B. On thermally insulated ducts, casings, equipment, or piping, stand-off mounting brackets, bases, adapters, or extended tubes shall be provided. These items shall provide clearance not less than the thickness of the insulation. Stand-off mounting items shall be integral with the thermometer or standard accessories of the thermometer manufacturer.

C. Remote-type thermometers shall have sensing elements or thermal elements

with capillaries.

3.10 SOUND ATTENUATORS

A. General: Install in accordance with manufacturers written instruction.

B. Locations: Provide sound attenuators in all ductwork connecting to air handlers having capacity greater than 8,000 cfm fans greater than 8,000 cfm capacity, and where indicated.

3.11 DUCT SMOKE DETECTORS

A. Division 23 Contractor shall install the portions of duct smoke detectors that are installed in the ductwork. Installation shall comply with manufacturer's instructions; coordinate work and location with Division 26.

END OF SECTION

SECTION 23 34 00 – FANS

PART 1 GENERAL

1.01 RELATED DOCUMENTS

A. Drawings and general provisions of the Contract, including General and Supplementary Conditions and Division 00 and Division 01 Specification Sections, apply to this Section.

B. Requirements of Section 20 05 00 apply to this Section.

1.02 WORK INCLUDED

A. Rooftop Exhaust Fans

B. Rooftop Kitchen Upblast Fans

C. In-Line Exhaust Fans

D. Fan Accessories

1.03 SUBMITTALS

A. General: Comply with Section 20 05 00.

B. Product Data: Submit manufacturer's product data for all items to be used. Submit fan curves showing SP vs. CFM and BHP vs. CFM with system operating point clearly marked.

1.04 QUALITY ASSURANCE

A. AMCA: Fans shall bear the AMCA certified seal unless indicated otherwise.

1.05 GENERAL REQUIREMENTS

A. Spare Parts: Provide two complete sets of spare belts for all belt driven fans.

1.06 REFERENCES

A. AMCA 99-0401: Classification of Spark Resistant Construction.

B. AMCA 210: Laboratory Methods of Testing Fans for Ratings.

C. IMC: International Mechanical Code.

D. NFPA 96: Standard for Ventilation Control and Fire Protection of Commercial Cooking Operations.

E. UL 762: Power Ventilators for Restaurant Exhaust Appliances.

PART 2 PRODUCTS

2.01 ACCEPTABLE MANUFACTURERS

A. General: Products shall comply with Section 20 05 00. See Section 20 05 00, paragraph 2.01 for Acceptable Manufacturer requirements.

B. Exhaust Fans: Greenheck, Twin City, Penn Barry, Cook, Carnes

C. VFD's: ABB.

D. Accessories: Fan manufacturers listed, NCA, Ruskin, Thybar, RPS.

2.02 GENERAL

A. Guards: All belt drives shall be equipped with belt guards, or enclosed within fan casing. Guards shall be factory fabricated and furnished with equipment, and comply with OSHA and WISHA regulations. Exposed openings into fan housings shall be protected with substantial metal screens or gratings.

B. Drives: Shall be sized for not less than 150% of the rated motor horsepower.

C. Adjustable Sheaves: All belt drive fans shall have adjustable sheaves and adjustable supports for adjusting belt tension. Sheaves shall be selected so that they are at their midpoint at design conditions.

D. Motors:

1. General: Comply with Section 20 05 00. Motors on belt drive fans shall have adjustable supports for adjusting belt tension. Motor speed controllers shall be VFD type except where solid state speed controllers are provided or EC motors with integral speed controller. VFD's shall be as specified in Division 25.

2. Fractional Horsepower Motors: Shall be the electronically commutated (EC) type with speed control where noted and where non-EC motors are not available which comply with code motor efficiency requirements. Unless noted otherwise, provide with manual speed control mounted at the motor for air balancers use. Motors shall be specifically designed for fan applications, have permanently lubricated ball bearings, speed controllable down to 20%, and have internal thermal overload protection.

3. Belt Drive Fans: Motors shall have adjustable supports for adjusting belt tension.

E. Performance: Fan capacity shall not be less than the values listed on the drawings. Fan performance shall be based on laboratory tests conducted in accordance with AMCA 210.

F. Outlets and Inlets: Fans shall be furnished with attachment angles and/or flanges as required for attaching ductwork and/or flexible connections indicated.

G. Fan Types: The type of each fan is indicated on the Fan Schedule, under the "Type" column, and corresponds to the types specified herein.

H. Fan Arrangement and Drive: Shall be as indicated. Select motor and drive access side to allow best access and to suit available space.

I. Electrical: Fan disconnects and motor starters shall comply with Division 26 specifications. Disconnects furnished with fan shall come factory wired to motor or shall be field wired by Division 23.

J. Finish: All fans shall have factory applied enamel finish (manufacturer's standard color, unless noted otherwise) over a rust inhibiting primer base coat; except a painted finish is not required on rooftop type fans of aluminum or equivalent corrosion resistant construction.

K. Backdraft Dampers:

1. General: Provide all exhaust fans with backdraft dampers. Backdraft dampers are not required for kitchen grease hood exhaust fans.

2. Ceiling Exhaust and Ceiling Cabinet Fans: Manufacturer's standard backdraft damper, factory installed integral with the fan, to close automatically to prevent airflow in the opposite direction than intended when fan is off; or type as specified for "Other Fans" below.

3. Rooftop Fans: Multi-blade backdraft damper, to close automatically to prevent airflow in the opposite direction than intended when fan is off, aluminum or galvanized steel construction (except shall be of stainless steel construction where duct system served is constructed of stainless steel). Frame shall be minimum 0.090-inches thick, with minimum 0.025-inch thick blades, synthetic bearings, concealed linkage connecting all blades, vinyl or felt blade edge seals, rated for 2500 feet per minute velocity, counterbalanced with adjustable weights to allow for proper operation. Leakage less than 10 cfm at 0.5-inch w.g. pressure differential for a 36-inch square damper. For installation in fan roof curb (unless indicated otherwise).

4. Other Fans:

   a. General: Multi-blade backdraft damper, to close automatically to prevent airflow in the opposite direction than intended, aluminum or galvanized steel construction, except shall be of stainless steel construction where duct system served is constructed of stainless steel. May be "butterfly" type where used on fans with round connections. Provide with flanges where needed for installation. Provide with coating where fan has internal coating (same type as indicated for the fan served).

   b. Where Duct Velocity is Under 1000 Feet per Minute: Frame minimum 18 gauge thick, with minimum 0.025-inch thick blades, synthetic bearings, concealed linkage connecting all blades, vinyl or felt blade edge seals, and rated velocity of 2500 feet per minute or duct velocity at point of application (whichever is higher). Provide with counterbalanced and adjustable weights as required by the application in order to have proper damper operation.

   c. Where Duct Velocity is Equal or Greater Than 1000 Feet per Minute: Frame minimum 0.125-inches thick, with minimum 0.070-inch thick blades, synthetic bearings, concealed linkage connecting all blades, vinyl or felt blade edge seals, and rated velocity of 2500 feet per minute or duct velocity at point of application (whichever is higher). Provide with counterbalanced and adjustable weights as required by the application in order to have proper damper operation. Leakage less than 15 cfm at 1-inch w.g. pressure differential for a 36-inch square damper.

L. Weatherproof: Where installed exposed to weather, fans shall have weatherproof enclosure, preventing any wind driven water entry into unit or drive assembly.

2.06 ROOFTOP FANS

A. Type: Centrifugal fan, for rooftop curb mounting, with down-blast discharge. Cook Model ACE, Greenheck CUBE (or approved).

B. Housing: Windband shall be constructed of minimum 16 gauge aluminum. Entire drive assembly and wheel, as a unit, shall be removable through the support structure without dismantling the housing. Provide birdscreen in fan discharge.

C. Fan Wheels: Shall be aluminum, backward inclined, non-overloading centrifugal type; dynamically and statically balanced.

D. Drive: Entire drive assembly shall be mounted on rubber vibration isolators. Motor and drives shall be isolated from the exhaust airstream. Air for motor cooling shall be taken into motor compartments by means of an air tube from an area free of contaminated exhaust fumes.

E. Accessories: Provide the following accessories where indicated:

1. Disconnect Switch: Factory mounted in motor compartment.

2. Speed Controls: Speed controller, allowing speed reduction down to 50% of maximum. Controller shall be for mounting in a standard wall box. Where motor type is not available for use with a solid state speed controller, provide with variable frequency drive.

2.09 KITCHEN UPBLAST FAN

A. Type: Centrifugal rooftop upblast vertical discharge fan, for commercial kitchen exhaust.

B. Housing: Windband shall be constructed of minimum 16 gauge aluminum. Entire drive assembly and wheel, as a unit, shall be removable through the support structure without dismantling the housing. Provide birdscreen in fan discharge. Fan shall have heavy gauge steel curb cap, and drain tube with external grease trough for collection of liquid residue.

C. Fan Wheels: Shall be aluminum, backward inclined, non-overloading centrifugal type; dynamically and statically balanced.

D. Drive: Entire drive assembly shall be mounted on rubber vibration isolators. Motor and drives shall be isolated from the exhaust airstream. Air for motor cooling shall be taken into motor compartments by means of an air tube from an area free of contaminated exhaust fumes.

E. Code Compliance: Fan shall be UL 762 listed for restaurant exhaust use and comply with IMC, NFPA 96, and code.

F. Hinge Kit: Fan base shall be hinged to allow lifting of fan for access to ductwork; provide with restraint cables to limit range of motion to approximately 90 degrees.

G. Accessories:

1. Disconnect Switch: Provide external junction box with disconnect, factory wired to motor.

2. Roof Curbs: For roof top curb mounting type fans. Shall be constructed of minimum 18 gauge galvanized steel or 0.064-inch thick aluminum of all-welded construction, with top wooden nailer held in place by metal wrap-around, and internally insulated with minimum 1/2-inch thick rigid fiberglass. Size of curb shall match fan and/or extended base used with.

Provide with built-in cant and step height (to allow for roof insulation), as required to match roof type. Provide with damper type as shown.

2.10 IN-LINE FANS

A. Type: Square housed, in-line centrifugal fan. Greenheck SQ, BSQ (or approved).

B. Housing: Shall be constructed of galvanized steel, minimum 20 gauge for fans with up to 14" diameter fan wheels, minimum 18 gauge 14" to 29" fan wheels, and minimum 16 gauge for 30" diameter fan wheels and larger. Housing shall be of square shape, with inlet and outlet square duct mounting collars. Housing shall have removable or hingeable access covers providing complete access to fan internals. Housing shall be lined with minimum 1" thick 1-1/2 lb per cubic foot fiberglass duct liner.

C. Fan Wheel: Shall be aluminum, backward inclined, non-overloading, centrifugal type; dynamically and statically balanced.

D. Drive: Fan shall be direct or belt drive as indicated on the Fan Schedule.

1. Belt Drive: Fan bearing and drive components shall be isolated from the air stream. Motor shall be located outside the housing and cooled by ambient air. Provide motor position indicated on drawings. Wheel shaft shall be ground and polished and mounted in permanently lubricated, sealed ball bearing pillow blocks, with a minimum average bearing life over 200,000 hours.

2. Direct Drive: Fan wheel shall be directly connected to motor.

E. Supports: Fans shall be provided with supports for horizontal base mounted, horizontal ceiling suspended, or vertical mounting as shown on the drawings. Provide spring type vibration isolators for horizontal suspended fans and neoprene type for base mounted units. Vibration isolators shall be sized to match fan weight.

F. Electrical Connections: Fans shall be factory wired to an external junction box and disconnect switch. Fan shall have flexible wiring for units where fan motor swings out of way for housing access.

H. Accessories: Provide the following accessories where indicated on the Fan Schedule.

1. Inlet Vane Dampers: Shall be constructed of minimum 20 gauge steel, factory mounted in fan inlet, to provide automatic variable air volume operation. (Actuator and control specified in Division 25).

2. Speed Controls: Solid state speed controller, allowing speed reduction down to 50% of maximum. Controller shall be for mounting in a standard wall box. Where motor type is not available for use with a solid state speed controller, provide with variable frequency drive.

PART 3 EXECUTION

3.01 INSTALLATION

A. General: Comply with Section 20 05 00. Install in accordance with manufacturer’s written installation instructions, code, applicable standards and best construction practices.

B. Locations: Install fans at locations indicated and in accordance with the Contract Documents.

C. Speed Controls: Fans with speed controllers shall have the speed controller mounted on the fan housing unless another location is indicated on the drawings (for use by Balancer). Install VFD's at accessible locations near item served.

D. Connections: Provide flexible connections in ductwork connections to all fans.

E. Rooftop Type Fans: Rooftop type fans shall be mounted on roof curbs, secured to curb on all sides, and sealed watertight.

F. Vibration Isolation: Install all fans with vibration isolators so that no sound or vibration is transmitted to the structure; except not required for rooftop type fans. See Section 20 05 48 for vibration isolation specifications.

G. Sheaves: Provide sheave changes for all belt driven fans. Sheave changes shall meet Balancer and Engineer requirements.

H. Operation and Maintenance:

1. General: Operation and Maintenance shall be in accordance with manufacturer's written procedures and recognized best maintenance practices. Keep records of maintenance and (upon request) forward to the Architect/Engineer prior to project final acceptance.

2. Stored Products: Provide maintenance (i.e. equipment rotation, lubrication, cleaning, etc.) and inspection on products while stored to maintain new condition.

3. Installed Products: Provide maintenance and inspection of products and operate fan systems until substantial completion or specified Owner Instruction has been provided (whichever is later). Maintenance shall include all manufacturer's recommended maintenance (i.e. bearing lubrication, belt tensioning, etc.). In addition to scheduled maintenance, review all equipment periodically to allow detection of improper operation or any special maintenance needs; review shall be consistent with best practices for the product but in no case less than every two weeks.

4. Fans shall not be operated until all construction activities that generate dust, dirt, fumes, or odors are complete. Fans shall not be placed into service until start-up has been completed.

I. Owner Instruction: Instruct Owner on the operation of each fan, including: system start-up, shut-down, emergency shut-down, normal control operation, safety aspects, maintenance and repair instructions.

J. Start-Up: Prior to start-up inspect fans and installation to confirm proper installation and system is ready for start-up. Arrange other trades to be present as needed (i.e. balancer, electrician, etc.). Check fans for correct rotation, tighten belts to proper tension, adjust fan speeds to provide required performance, verify proper electrical and control connections, check vibration

isolation (as applicable) for correct operation, and lubricate bearings per manufacturer's recommendations.

END OF SECTION

SECTION 23 35 00 – SPECIAL EXHAUST SYSTEMS

PART 1 GENERAL

1.01 RELATED DOCUMENTS

A. Drawings and general provisions of the Contract, including General and Supplementary Conditions and Division 00 and Division 01 Specification Sections, apply to this Section.

B. Requirements of Section 20 05 00 apply to this Section.

1.02 WORK INCLUDED

A. Kitchen Hood Exhaust Ductwork

1.03 QUALITY ASSURANCE

A. All hoods and ducts shall comply with NFPA, IMC and applicable ACGIH and SMACNA construction standards.

1.04 SUBMITTALS

A. General: All submittals shall comply with Section 20 05 00.

B. Product Data: Submit manufacturer's product data for all items to be used.

1.05 REFERENCES

A. ACGIH: American Conference of Governmental Industrial Hygienists, Industrial Ventilation - A Manual of Recommended Practice, 20th Edition.

B. NFPA 45: Fire Protection for Laboratories Using Chemicals.

C. NFPA 91: Blower and Exhaust Systems for Dust, Stock and Vapor Removal or Conveying.

D. NFPA 96: Removal of Smoke and Grease-Laden Vapors from Commercial Cooking Equipment, 1986 Edition.

E. SMACNA: Round Industrial Duct Construction Standards, 1977 Edition.

F. SMACNA-DCS: HVAC Duct Construction Standards.

PART 2 PRODUCTS

2.01 ACCEPTABLE MANUFACTURERS

A. Products shall comply with Section 20 05 00, Paragraph 2.01, Acceptable Manufacturers.

2.03 KITCHEN HOOD

A. Hood: See Division 11.

B. Ductwork: Shall be constructed of minimum 16 gauge type 302 or 304 stainless steel with all seams and joints having a liquid-tight continuous exterior weld, and complying with IMC and NFPA 96. Pressure class shall be minus 4-inch w.g. (unless noted otherwise).

C. Access Doors: Factory fabricated weld-on style consisting of frame and access panel, grease and liquid tight, UL 1978 listed, constructed of stainless steel, with

high temperature gasket rated to 2300 deg F mimimum. Ductmate “Ultimate Door II” (or approved).

PART 3 EXECUTION

3.01 INSTALLATION

A. General: Installation shall comply with code, manufacturers written installation instructions, and best construction practices.

B. Welded Galvanized Material: Power-wire brush clean all welds and paint with cold galvanizing paint (or hot dip galvanize assembly).

END OF SECTION

SECTION 23 37 00 – AIR OUTLETS AND INLETS

PART 1 GENERAL

1.01 RELATED DOCUMENTS

A. Drawings and general provisions of the Contract, including General and Supplementary Conditions and Division 00 and Division 01 Specification Sections, apply to this Section.

B. Requirements of Section 20 05 00 apply to this Section.

1.02 WORK INCLUDED

A. GRD Outlets

B. GRD Inlets

C. Louvers

D. Wall Caps

1.03 DEFINITIONS

A. GRD's: Grilles, Registers, and Diffusers.

1.04 REFERENCES

A. AHRI 885: Procedure for Estimating Occupied Space Sound Levels in the Application of Air Terminals and Air Outlets

B. AMCA 500: Laboratory Methods of Testing Louvers for Rating.

C. ASHRAE 70: Method of Testing the Performance of Air Outlets and Air Inlets.

D. ASHRAE-F: ASHRAE Handbook of Fundamentals.

E. SMACNA-DCS: HVAC Duct Construction Standards, 3rd Edition.

1.05 SUBMITTALS

A. General: Comply with Section 20 05 00.

B. Product Data: Submit product information for all items to be used.

C. Operation and Maintenance: Submit operation and maintenance data and submittal data for inclusion in project O&M Manuals.

PART 2 PRODUCTS

2.01 ACCEPTABLE MANUFACTURERS

A. Products shall comply with Section 20 05 00, Paragraph 2.01, Acceptable Manufacturers.

B. Grilles, Registers and Diffusers: Titus, MetalAire, Krueger, Price, Tuttle & Bailey, Kees, Carnes

C. Grilles – Type A: Kees, AJ Manufacturing.

D. Louvers: Ruskin, Greenheck, Leader Industries, American Warming and Ventilating

F. Wall Caps: Greenheck, PennBarry, Nutone, Carnes.

2.02 GENERAL REQUIREMENTS

A. Type: Air outlets and inlets shall be of the size, type, and with number of throws as shown on the drawings; and shall match the appearance and performance of the manufacturers' models specified and scheduled on the drawings.

B. Performance: Air outlet and outlet performance shall be based on tests conducted in accordance with ASHRAE 70.

C. Sound Level: Air outlets and inlets shall not exceed a sound level of NC 30 for the size indicated and airflow rate application. Sound levels shall be determined in accordance with AHRI 885 and ASHRAE-F.

D. Finish: Grilles, Registers and Diffusers shall have factory applied finish, color as selected by Architect/Engineer, except where indicated to have a brushed aluminum finish (or other finish type). Finish shall be an anodic acrylic paint, baked on, with a pencil hardness HB to H. Pint shall pass a 90 hour ASTM B117 salt spray test, 250 hour ASTM D870 water immersion test, and an ASTM D2794 reverse impact test with at least a 50 inch-pound force applied.

E. Frame Style: Provide air outlets and inlets with frame style to match ceiling or wall construction installed in. Where supply air outlets or inlets are installed in T-bar ceiling systems, they shall be factory installed in 2' x 2' or 2' x 4' metal panel to match ceiling layout. Where installed against gypsum board surface, brick or similar hard surface, or where exposed, provide with 1-1/4-inch wide outer border. Where space does not permit installing 2' x 2' metal panel, provide outlets or inlets with 1-1/4-inch wide outer border. Where air outlets are installed adjacent to surface mounted light fixtures, outlets shall have 4-inch deep drop frames. (See reflected ceiling plan and/or electrical lighting plan for ceiling and lighting types).

F. Transfer Grilles: Ceiling transfer grilles shall be same as ceiling exhaust grilles (CEG) unless noted otherwise; wall transfer grilles (WTG) shall be same as wall exhaust grilles (WEG) (unless noted otherwise).

G. Construction: Air outlets and inlets shall be of steel or aluminum construction except that:

1. Where noted to be constructed of a specific material, shall be as noted.

2. In assemblies with a required fire rating and required to have fire dampers shall be of steel construction.

3. In wet areas or subject to condensation (i.e., locker rooms, restrooms, kitchens, exterior soffits, etc.), where not used in fire rated assemblies, shall be of aluminum construction.

4. Air outlets and inlets in the same room, area, or within common view shall be constructed of the same material.

2.03 SUPPLY AIR OUTLETS

A. Ceiling Diffuser (CD): Aluminum or steel construction, have louver face, for horizontal discharge and square neck. Louver face shall be fixed, and be available for one, two, three or four way discharge configurations. Core shall be easily removed with no tools required. Krueger SH, SH5 Series (or approved equal).

A. Ceiling Diffuser Register (CDR): Same as CD but with opposed blade damper.

B. Ceiling Diffuser (CDL): Aluminum or steel construction, with curved backpan and formed edge of face panel designed for 360 deg airflow for low flow applications (50 cfm and less). Titus TJD (or approved equal).

C. Wall Supply Grille (WSG): Aluminum or steel construction, double deflection type, with horizontal face bars and vertical rear bars. Unit shall have outer frame borders 1-1/4-inch wide, with mitered corners, and perimeter gasket to prevent air leakage. Frame shall be constructed of minimum 22 gauge steel or minimum 0.032-inch thick aluminum. Deflecting bars shall be rigid extruded aluminum of semi-air-foil design, on 3/4-inch centers. Vertical and horizontal bars shall have friction pivots at each end to allow for blade angle adjustment without blade loosening or rattling. Krueger 5880H, 880H Series; Titus 300FL, 300FS Series (or approved equal).

D. Wall Supply Register (WSR): Same as WSG but with an opposed blade damper operable through the face of the grille.

2.05 RETURN AIR INLETS

A. Ceiling Return Grille (CRG): Aluminum construction, "cube-core" or "egg-crate" type, with 0.025-inch thick x 1/2-inch deep strips mechanically joined to form 1/2" x 1/2" x 1/2" cubes. Krueger Series EGC5. Titus Series 50F.

B. Ceiling Return Register (CRR): Same as CRG but with opposed blade damper operable from face of register

C. Wall Return Grille (WRG): Shall be of aluminum or steel construction, with 35 degree angular horizontal face bars. Unit shall have outer frame border, 1/4-inch wide, gasketed to prevent air leakage and minimize smudging. Deflecting bars shall be rigid extruded aluminum of semi-air-foil design, on 3/4-inch centers. Krueger Model No. S580H or S80H. Titus Series 350RL.

D. Wall Return Register (WRR): Same as WRG but with an opposed blade damper.

E. Wall Return Grille--Type A (WRG-A): Shall be of aluminum or steel construction, with 14 gauge, 40 degree angular horizontal face bars, on 1/2" centers and reinforced on 6" centers by 14 gauge vertical bars. Core shall be welded to 14 gauge frame. Provide with screw holes on maximum 8" centers. Type to match WSG. Kees GHD40.

2.06 EXHAUST AIR INLETS

A. Ceiling Exhaust Grille (CEG): Same as CRG.

B. Ceiling Exhaust Register (CER): Same as CEG but with opposed blade damper operable from face of register.

D. Wall Exhaust Grille (WEG): Same as WRG.

2.08 LOUVERS

A. Type: High performance, 6" deep, stationary, drainable louvers. Ruskin Model ELF6375DX (or approved).

B. Frame: 6" deep, constructed of minimum 0.090" 6063t5 extruded aluminum, with integral downspouts in jambs and mullions.

C. Blades: Shall be constructed of minimum 0.081" 6063t5 extruded aluminum,

positioned at 37.5 degree angle on approximately 5-7/8" centers, with drain gutters.

D. Bird Screen: Shall be constructed of 3/4" mesh, 0.051" aluminum.

E. Performance: Rated in accordance with AMCA 500. For a 48”x48” louver, minimum free area of 57%, with pressure drop not exceeding 0.10 inches w.g. at 800 feet per minute. No measurable water penetration at velocity below 1000 feet per minute.

F. Wind Loading: Louver shall incorporate structural supports required to withstand a wind load of 25 lb. per square foot.

G. Finish: Kynar Finish; color as selected by Architect.

2.11 WALL CAPS

A. Masonry Walls: Extruded aluminum brick vent, constructed of 6063T5 aluminum, minimum 4-inch depth, with minimum 0.1-inch thick angled blades, aluminum mesh insect screen, and internal bottom water stop. Provide with Baked Enamel Finish, color as selected by Architect. Provide with aluminum duct, minimum 0.063-inch thick, length to match wall thickness plus 2-inches. Size 15-5/8-inch x 7-3/4-inch, unless indicated otherwise. Ruskin BV100 (or approved equal).

B. Non-Masonry Walls:

1. Aluminum, For Airflows of 250 cfm and Less: Constructed of minimum 0.025-inch thick aluminum, hooded configuration, natural finish, with bird screen, built-in spring loaded backdraft damper, and round duct connection. Duct connection size to match connecting duct size (or equivalent free area). For air intake applications delete backdraft damper. Broan 641, 643, 610 (or approved equal).

2. Stainless Steel, Airflows of 250 cfm and Less: Constructed of minimum 0.020-inch thick type 304 stainless steel, hooded configuration, natural finish, with bird screen, built-in spring loaded backdraft damper, and round duct connection. Duct connection size to match connecting duct size (or equivalent free area). For air intake applications delete backdraft damper. Artis SDWVSS, SWVSS (or approved equal).

3. For Airflow of 251 cfm and Greater: Extruded aluminum brick vent, constructed of 6063T5 aluminum, minimum 4-inch depth, with minimum 0.1-inch thick angled blades, aluminum mesh insect screen, and internal bottom water stop. Provide with Baked Enamel Finish, color as selected by Architect. Provide with aluminum duct, minimum 0.063-inch thick, length to match wall thickness plus 2-inches. Size 15-5/8-inch x 7-3/4-inch, unless indicated otherwise. Ruskin BV100 (or approved equal).

2.15 MISCELLANEOUS

A. Goosenecks: Shall be made of minimum 18 gauge galvanized steel, in accordance with SMACNA-DCS, and as shown on the drawings.

B. Screen: 1/2-inch mesh, constructed of either 0.051-inch aluminum wire or 19 gauge galvanized steel wire.

PART 3 EXECUTION

3.01 INSTALLATION

A. General: Install air outlets and inlets in locations indicated and so as to conform with building features and coordinated with other work. See hangers and supports specification Section for supports and additional requirements.

B. Location Verification: Verify all air inlet/outlet locations with building features and other trades prior to installing any duct systems that will connect to the air outlets/inlets. For locations where air inlet/outlet location is noted to be verified, or location is not clear, develop shop drawings showing the proposed location, or the location that best suits field conditions, and submit for review.

C. Connections: Furnish all necessary screws, clips, duct collars, and transitions required to allow for the installation and connection of ductwork to all air outlets/inlets. Connect all ductwork to air inlets and outlets with fasteners, minimum one each side and in compliance with SMACNA-DCS. See ductwork specification Section for sealing and additional requirements.

D. Painting:

1. Paint ductwork and accessories which are visible behind air outlets and inlets flat black. Painting to include ductwork, duct liner, turning vanes, liner attachments, and all visible items (including fastening pins for duct lining).

2. Coordinate with the Division 09 Contractor for any necessary painting of air outlets/inlets/louvers prior to installation.

E. Weather Exposure: All outlets and inlets exposed to the weather shall be adequately flashed and installed in a manner to assure complete weatherproofness. Sealing and caulking of all outlets and inlets exposed to the weather shall conform to Division 07 and Section 20 05 30.

F. Screened Openings: Provide screened openings (SO) on all duct openings where indicated and where openings do not have grilles or registers.

I. Louver and Wall Caps: Slope bottom of all ducts within 18 inches of connecting to louvers and wall caps at minimum 1% slope toward bottom of louver; seal all joints within 6-inches of bottom of ductwork water tight.

END OF SECTION

SECTION 23 74 23 – PACKAGED, OUTDOOR, HEATING – ONLY MAKE-UP AIR UNITS

PART 1 GENERAL

1.01 RELATED DOCUMENTS

A. Drawings and general provisions of the Contract, including General and Supplementary Conditions and Division 00 and Division 01 Specification Sections, apply to this Section.

B. Requirements of Section 23 05 00 apply to this Section.

1.02 WORK INCLUDED

A. Make-up Air Units

B. Unit Roof Curbs

C. Start-up

1.03 QUALITY ASSURANCE

A. Units shall be rated in accordance with recognized standards and meet Code requirements for motor and combustion efficiencies.

B. Fan performance ratings shall be based on tests made in accordance with AMCA Standard 210.

1.04 SUBMITTALS

A. General: Shall comply with Section 23 05 00.

B. Product Data: Provide complete product information submittals on all units; include performance capacities, fan performance (cfm vs. esp); and information on all filters and accessories.

1.05 GENERAL REQUIREMENTS

A. Standardization: All units shall be the product of the same manufacturer.

B. Substituted Equipment: The drawings show design configuration based on a particular manufacturers equipment. Use of another manufacturer's equipment (i.e. substituted equipment) that is configured different from what is shown will require redesign of mechanical ductwork, piping, electrical, structural, unit support systems, and general building construction to accommodate the substituted equipment. Such redesign shall meet the requirements and have the approval of the Architect/Engineer prior to fabrication.

C. Factory Testing: The complete control system and all safety, burner and gas manifold functions shall be factory tested to assure proper operation and to simplify field commissioning.

D. Seismic and Wind Loads: Units shall be designed for Seismic Design Category D, Component Importance Factor of 1.0, and wind loading of 100 mph.

PART 2 PRODUCTS

2.01 ACCEPTABLE MANUFACTURERS

A. Products shall comply with Section 23 05 00, Paragraph 2.01, Acceptable

Manufacturers.

B. Furnaces: Trane, Ice, Reznor, Rapid, CaptiveAire.

2.02 MAKE-UP AIR UNIT

A. Indirect gas fired make-up unit for outdoor rooftop application with capacity and configuration as shown on plans.

B. Casing: The unit exterior casing shall be of minimum 18 gauge galvanized steel with enamel finish. The entire unit casing shall be insulated with minimum 1 inch thick 1.5-lb. fiberglass insulation with neoprene backing. The burner/heat exchanger section shall be stainless steel construction. An integral welded steel channel frame shall support the unit casing.

C. Blower/Motor Section: The fan section and motor assembly shall be constructed in accordance with AMCA standards. The assembly shall be designed to house the fan, bearings, motor, and v-belts which shall be selected for at least 50% above the rated motor capacity. Blower shall be belt drive with variable frequency drive where indicated. The blower wheel shall be statically and dynamically balanced, and mounted on a turned, ground and polished shaft with rigid bearing supports.

D. Filter /Outdoor Air/Return Air Section: Shall have rear outside air inlet, bottom return air inlet with integral dampers, and filters. Actuators and Controls by Division 25. Filters shall be 2" pleated throwaway, 30% efficient type as specified in Section 23 40 00, with minimum square footage as noted. Filter access shall be through a hinged side access door, requiring no tools to open.

E. Burner: The burner shall be CGA/AGA approved for natural gas. The burner shall modulate with a single furnace turndown ratio of at least 20% up to 100%, and shall start on low fire and modulate to full fire as required. Unit controls type shall maintain the turndown, proper fuel-to-air ratios, and unit efficiencies. Unit controller shall be for use with the Division 25 control system, and shall adjust unit modulating gas valve to control furnace output. Burners shall be indirect gas-fired type, with separated combustion, and shall have forced draft capable of reduced load turndown specified. Primary heat exchanger shall be constructed of aluminized steel. Secondary heat exchanger shall be constructed of Polypropylene coated steel. Electronic ignition system with hot stick type ignition spark transformer, gas valve complete with all safety controls includes main gas valve, flame supervision, positive burner safety switch, pilot cock and adjustable main and pilot pressure regulators. Flame safeguard system and the fuel control system in compliance with U.L. listing.

F. Electrical Control Panel: Shall be factory wired for single point field connection, and include: Magnetic motor starter with thermal overloads, on/off/auto selector switch, burner on, flame failure LED, blower on LED, line voltage/step transformers. Fuse blocks, terminal strip for field connection, electronic burner safety relay with main and pilot sensing, timer for purging the combustion chamber, automatic electric ignition system, fan, limit, draft and combustion air switches. All unit components requiring power or control shall be factory wired.

G. Temperature Controls: Unit shall be for use with controls furnished by Division 25 for temperature control.

H. VFD: Shall comply with VFD’s specified in Section 23 74 00.

I. Flue: Provided with extended flue, same as specified in Section 23 74 00.

J. Warranty: 5 years.

K. Factory fabricated heavy gauge steel curb, with horizontal base foot, top wood nailer wrapped over top with top of steel curb, and top gasket seal. Size, configuration, and capacity to match equipment served and roof slope installed on. Curb shall provide level watertight mounting surface for equipment served, and shall have provisions for seismic anchoring of unit to curb, and curb to building structure. Curb shall include seismic restraint reinforcing and calculations by a structural engineer licensed in the State of the project location showing forces imparted from the unit to the curb and from the curb to the roof structure as required by code and per requirements of Section 23 05 48.

L. Adjustable Sheaves: All belt drive fans shall have adjustable sheaves (except where motors are 5 hp and larger, fixed sheaves may be used). Sheaves shall be selected so that they are at their midpoint at the design conditions.

PART 3 EXECUTION

3.01 INSTALLATION

A. Unit installation shall be in strict accordance with the manufacturer's requirements. Units shall be installed in locations shown on drawings. Units shall be level (or slightly sloped to drain) and aligned with building walls.

B. Unit casing shall be sealed to eliminate all leakage.

C. Unit shall be thoroughly cleaned of all debris and factory filter shall be removed prior to operation.

D. Units shall not be operated until all construction activities that generate dust, dirt, fumes, or odors are complete; and the Engineer has reviewed the system and granted approval.

E. Sheaves: Include in bid costs for sheave changes for all belt driven fans as required to suit balancer or Engineer requirements. If fewer fans require sheave changes a credit (i.e. deductive change order) will be issued.

E. Change sheaves on belt driven fans as directed by the Engineer or Balancer. Include in bid costs for one sheave change for each belt driven fan. Coordinate with balancer for new sheave requirements.

F. Provide two complete sets of spare belts for all belt driven fans, and one extra set of filters.

3.02 START-UP

A. Prior to air balancing and testing, check fans for correct rotation, tighten belts to proper tension, adjust fan rpm to value shown on drawings, and lubricate bearings per manufacturer's recommendations.

B. Subsequent to installation, and prior to air balancing, the installing Contractor shall perform functional tests and start-up for a minimum period of 3 days with various thermostat settings to assure proper operation over the full design range. Provide start-up report, listing all checks performed.

C. All air handling equipment shall be tested for proper fan operation, bearing

integrity, and unit performance.

END OF SECTION

SECTION 23 81 53 – PACKAGED GAS HEAT/ELECTRIC COOL

PART 1 GENERAL

1.01 RELATED DOCUMENTS

A. Drawings and general provisions of the Contract, including General and Supplementary Conditions and Division 00 and Division 01 Specification Sections, apply to this Section.

B. Requirements of Section 20 05 00 apply to this Section.

1.02 WORK INCLUDED

A. Single Package Gas Heat/Electric Cool Units

B. Unit Roof Curbs

1.03 SUBMITTALS

A. General: Submittals shall comply with Section 20 05 00.

B. Product Data: Submit product information on HVAC units, including performance data showing cooling capacity (as function of indoor and outdoor temperatures and airflow rates), heating capacity, fan performance, filter information, unit accessories, wiring diagram (distinguishing unit wiring from field wiring) and point of connection of all utilities.

C. Installation: Submit unit installation instructions.

1.04 QUALITY ASSURANCE

A. Listing: Units shall be UL listed and labeled.

B. Performance Ratings: Units' cooling performance shall be rated in accordance with ANSI/AHRI 210/240. Units' heating performance shall be rated in accordance with ANSI/AHRI Z21.47.

C. Codes: Unit and accessories shall conform to applicable codes and standards. Unit efficiency shall comply with code (and exceed code as indicated).

D. Operating Ability: Unit and all components shall be able to withstand ambient temperatures from 0 deg F to 125 deg F, plus direct exposure to sun and weather elements without adverse affects. Unit shall be able to operate and produce cooled air between ambient temperatures of 45 deg F and 115 deg F. Unit shall be able to operate and produce heated air between ambient conditions of 0 deg F and 80 deg F. Unit shall be able to operate with supply air temperatures between 50 deg F and 125 deg F; and with room temperature setpoints between 65 deg F to 85 deg F.

E. Electrical: Coordinate equipment electrical voltage/phase, minimum circuit amps, and overcurrent protection requirements with the Division 26 contractor prior to ordering.

1.05 GENERAL REQUIREMENTS

A. Extended Warranties:

1. Unit compressors shall be warranted by the manufacturer for five years. All labor and materials associated with compressor replacement (or repair) shall be warranted.

2. Gas fired heat exchanger shall be warranted by the manufacturer for ten years. All labor and materials associated with heat exchanger replacement (or repair) shall be warranted.

B. Spare Parts:

1. Belts: Provide two complete sets of spare belts for all belt driven fans.

2. Filters: Provide two complete spare sets of filters for all units.

C. Safety Labeling: Units shall have labeling to aid in the service of the unit to indicate caution areas, and hazards.

D. Seismic:

1. General: Units shall be constructed to withstand the forces that could be imparted to the unit and its components in a seismic event as required by code. This facility is not an essential facility.

2. Anchoring Requirements: Coordinate with Section 23 05 48 to allow for seismic calculations for unit anchorage and forces imposed on anchors and on building.

1.06 REFERENCES

A. ANSI/AHRI 210/240: Performance Rating of Unitary Air Conditioning & Air-Source Heat Pump Equipment.

B. ANSI/AHRI 270: Sound Performance Rating of Outdoor Unitary Equipment.

C. ANSI Z21.47: Gas Fired Central Furnaces.

D. ANSI/ASHRAE 52.2: Method of Testing General Ventilation Air-Cleaning Devices for Removal Efficiency by Particle Size.

E. ASTM B117: Standard Practice for Operating Salt Spray Apparatus.

PART 2 PRODUCTS

2.01 ACCEPTABLE MANUFACTURERS

A. Products shall comply with Section 20 05 00. See Section 20 05 00, paragraph 2.01 for Acceptable Manufacturer requirements.

B. Units: Daikin, Carrier, Trane, JCI/York.

2.03 PACKAGED GAS HEAT/ELECTRIC COOLING UNITS

A. General:

1. Type: Single packaged gas heating and electric air conditioning units for outdoor rooftop application.

2. Factory Assembled Package: Units shall be fully factory assembled and shall be complete with casing, coils, fans, compressor(s), piping, wiring, disconnect, controls, gas burner, heat exchanger and all other accessories required to be ready for field connections and operation. Units shall be UL listed and labeled, and be designed for outdoor application. Units shall be constructed for installation on a roof curb providing full perimeter support and may utilized a pedestal support under condenser section.

3. Capacity: Units shall have minimum cooling and heating capacities as scheduled on the drawings at the conditions shown, and shall be rated in accordance with AHRI and ANSI standards.

4. Refrigerant: Units shall be for use with refrigerant R-410A, or R-407C, and shall be fully charged at the factory.

5. Fuel: Unit shall be for use with natural gas.

B. Unit Casing:

1. Construction: Galvanized steel, phosphatized, and finished with an air-dry paint coating durable enough to withstand a minimum of 672 consecutive-hour salt spray application in accordance with standard ASTM B 117. Structural members shall be heavy gauge with access doors and removable panels of heavy gauge steel. Roof panels shall be sloped to provide positive drainage of rain water/melting snow away from the cabinet.

2. Access Doors: Fully gasketed hinged doors with fluted knob fasteners and chained "tie-backs" to provide access to filters, heating section, return/exhaust air fan section, supply air fan section and evaporator coil section. Additional removable panels shall provide access to unit compressors, controls, and all other items requiring service.

3. Insulation: Minimum 1/2 inch thick foil faced fiberglass internal liner on all exterior panels in contact with the conditioned air stream.

4. Fasteners: All screws or holding devices shall be of cadmium plated construction to resist corrosion.

5. Unit base shall be watertight with heavy gauge formed load bearing members, formed recess and curb overhang. Unit lifting lugs shall accept chains or cables for rigging, and shall also serve as unit tie down points.

C. Supply and Exhaust Fans:

1. Fan Types: Forward curved centrifugal type belt driven. Complete fan assembly (fan mounted on shaft, bearings and in scroll housing) shall be dynamically balanced at factory.

2. Spring Isolation: Fans and motors shall be mounted on a common base assembly and isolated from unit with 2-inch deflection spring isolators. Provide thrust restraint isolation on the fan housing/fan board to assure smooth fan startup transition and operation.

3. Bearings: Fan shafts shall be mounted on grease lubricated ball bearings with extended grease lines to allow lubrication of bearings from filter housing area.

4. Motors: High efficiency type with a minimum service factor of 1.15. All drive components shall be readily accessible without the use of scaffolds or ladders, to facilitate periodic maintenance checks and for operator safety.

5. Exhaust Fan Dampers: Exhaust fans shall have backdraft dampers.

6. Adjustable Sheaves: All belt drive fans shall have adjustable sheaves (except where motors are 5 hp and larger, fixed sheaves may be used).

Adjustable sheaves shall be selected so that they are at their midpoint at the design conditions.

7. Variable frequency Drives: Provide unit supply and return fans with VFD's where indicated on the plans, or where units serve VAV air terminal units.

   a. Variable Frequency Drives (VFD's):

      1. General: Where indicated, fans shall have variable frequency drives (VFD's). Unit housing shall be arranged to provide a mounting location inside the unit to provide an insulated enclosure to completely house the VFD, with adequate ventilation and heat to allow proper VFD operation with all outside air conditions. Acceptable manufacturers: ABB, Allen-Bradley, Reliance.

      2. VFD Type: Adjustable frequency and voltage variable speed controller, pulse width modulated type.

      3. Controller: Shall be housed in a NEMA 1 (or better) enclosure, and shall provide 6 to 60 Hz adjustable torque output. Standard Features:

         a. Start-stop speed selection.

         b. Manual speed potentiometer.

         c. Input fuses.

         d. Insensitive to incoming power phase sequence.

         e. Adjustable volts/Hertz.

         f. Output frequency stabilized to + 0.5% of set speed for +10% to -5% change in line voltage of 15 degrees C change in ambient temperature.

         g. Three-phase output voltage regulated to + 1% of rated voltage with +10% to -5% variations in plant power.

         h. Standard off-the-shelf, NEMA B and synchronous motors (3600, 1800, 1200 rpm) usable without derating controller.

         i. Automatic shutoff under output short circuit conditions or when load current exceeds 150% of maximum output amps (RMS).

         j. Input fuses.

         k. Line transient protection to prevent power line transients from harming the controller.

         l. Relay contact to provide external signal for alarm and run condition.

m. Monitor lamps (or LCD display) indicating: power on, zero speed, enabled, unit failure (with type indicated).

n. Hand-Off-Auto switch.

o. Auto restart after power outage.

p. Isolated Process control Follower - accepts 0 to 5 mA, 1 to 5 mA, 4 to 20 mA, 10 to 50 mA, 0 to 10 V D-C or 25 to 250 V D-C signal.

q. Input Disconnect (meeting NEC requirements for unit power disconnect).

r. Output Contactor - for positive motor disconnect.

s. Output Overloads - using individual phase bimetallic thermal sensors.

t. Ammeter - ampere scale depending upon drive rating.

u. Voltmeter - 0 to 500 volt (460 volt drives); 0 to 750 volts (575 volt drives).

v. Frequency Meter - 0 to 120 Hz scale.

w. Manual Bypass - To switch the motor to or from the controller to the line.

4. VFD shall be for use with specified equipment. Unit shall accept appropriate control signal from the 23 09 33 control system and provide for variable speed operation of unit served.

5. System shall be fully compatible with motors furnished, and shall be free of audible noise exceeding an NC of 45 in any octave band.

D. Gas Fired Heating Section

1. General: Gas-fired heating section as a completely assembled and factory-installed heating system integral to unit, UL or CSA approved specifically for application used in. Provide capability for threaded gas piping connection through bottom of unit.

2. Gas Burner: Forced-draft type burner with adjustable combustion air supply, gas valve, manual shut-off, direct spark or pilot ignition, and flame sensing monitoring electrode. Provide air proving switch to prevent burner operation when burner is open for maintenance or inspection. Burner shall be full modulation type with turn down ratio of at least 4 to 1.

3. Gas Burner Safety Controls: Provide safety controls as required by code and as required to prevent unsafe operation or damage to unit. Controls shall include: electronic flame safety controls for proving of combustion air prior to ignition sequence, pre-purge cycle, continuous electronic flame supervision, and time delay between first and second stage gas valve operation on two-stage heaters.

4. Combustion Blower: Centrifugal type fan with built-in thermal overload protection on motor and permanently lubricated bearings.

5. Heat Exchanger: Tubular two pass heat exchanger of manufactured of 16-gauge type 304 stainless steel primary surface and 18-gauge type 304 stainless steel secondary surface.

E. Evaporator Coil: Shall be constructed of aluminum fins mechanically bonded to copper tubes. Evaporator coil shall be inter-circuited to maintain active coil face area at part load conditions. Coil shall also utilize internally enhanced tubing for maximum heat transfer efficiency. Factory pressure and leak test coil at 300 psi (minimum). Provide pitched stainless steel drain pan to assure positive drainage of condensate from the unit casing, at evaporator coil, with drain connection to outside of unit and with PVC p-trap.

F. Condenser Coil: Constructed of aluminum fins mechanically bonded to copper tubes. Factory leak test coil under 450 psi pressure (minimum). Condenser coils shall be V-banked for cleaning ease. The coils shall not exceed 14 fins per inch density to ease cleaning, and prevent excessive air pressure drop across the condenser coil. Unit shall have subcooling circuit(s) integral with condenser coils to maximize efficiency and prevent premature flashing of liquid refrigerant.

G. Condenser Fans: Vertical discharge, direct drive propeller type fans with steel blades, and three phase motors. Fans shall be statically and dynamically balanced. Motors shall be permanently lubricated, with built-in current and thermal overload protection and weathertight slinger over motor bearings.

H. Compressors: Compressors may be scroll or reciprocating type.

1. Scroll Type: Industrial grade, energy efficient direct drive 3600 RPM maximum speed hermetic scroll type compressors. Motor shall be suction gas. Compressors shall have centrifugal oil pump with dirt separator, oil sight glass, and oil charging valve. Compressors shall have internal line break overcurrent protection and overtemperature protection, internal high pressure relief or high pressure switch, and crankcase heaters. Compressors shall be mounted on vibration isolators.

2. Reciprocating Type: Semi-hermetic reciprocating industrial grade compressors with: single piece crankshafts, single piece connecting rods, aluminum pistons, rings to prevent gas leakage, high strength non-flexing ring type suction and discharge valves, spring loaded heads, replaceable cylinder liners, and sealing service immersed in oil. Provide removable discharge heads and hand hole covers, and discharge service valves. Provide with automatic capacity reduction equipment consisting of suction valve unloaders.

3. Compressor Safeties: Shall include overcurrent protection, thermostatic motor winding temperature control to protect against excessive motor temperatures, incorrect phase sequence protection, phase loss protection, high and low pressure cutouts, reset relays, compressor lockout to prevent compressor operation at low ambient conditions, and evaporator frost protection.

I. Refrigerant Circuit: Shall be fully factory piped and shall include a refrigerant line filter/drier, service gauge ports, and thermostatic expansion valve for each circuit.

J. Electrical Power: Units shall be for use with power of voltage and phase as scheduled on the drawings. Units shall have single source power entry unless indicated otherwise. Units with single source power entry shall require only one field connection and power source. All necessary terminal blocks, fuse blocks, fuses, wiring, junction boxes and accessories shall be factory installed within the unit cabinet to provide power to all unit devices requiring power. Access panels to unit electrical power section shall be hinged with latches (or equivalent device), requiring no tools to open.

K. Economizer – Factory:

1. General: Unit shall have economizer system manufactured by unit manufacturer to allow use of 100% outside air for economizer cooling. System shall have outside air and return air dampers, each operable from 0% to 100% of unit total airflow capacity. Dampers shall have linkage to allow return air damper to close as outside air damper opens. Outside air inlet shall have an aluminum mesh water entrapment filter and intake hood.

2. Dampers: Economizer dampers shall be the low leak type, with polyvinyl gasketing on leading edges of damper blades and a leakage rate not to exceed 1.0% of nominal airflow at one inch w.c. static pressure. Leakage rate shall be determined in accordance with AMCA Standard 575.

3. Relief: Unit shall have barometric relief damper to allow for pressure relief of building air when outside air damper is 100% open. Relief outlet shall have hood with birdscreen.

M. Controls:

1. General: Unit shall have factory installed controls which allow for the 23 09 33 control system to control unit fan, cooling, heating, and economizer operations. Unit shall be furnished with all necessary relays, starters, wiring terminal strips, timers, safety devices, interface modules, etc. to provide the sequence of operation as specified in 23 09 33 using the 23 09 33 control system, and allowing unit's safeties to protect unit components. Unit wiring shall be color coded and numbered corresponding to unit's wiring diagram. Access panels to unit controls shall be hinged with latches (or equivalent device) requiring no tools to open.

2. 23 09 33 Interface: Unit shall have terminal strip (and associated controls) for connection of 23 09 33 wiring. Unit controls shall allow for:

a. Fan operation when "common" and "fan" terminals are interconnected (by the 23 09 33 control system). For units with variable speed fans, unit shall have control terminals to accept a 4 to 20 mA signal from the 23 09 33 control system to allow the 23 09 33 control system to control fan speed.

b. Cooling operation when "common" and "compressor" terminals are connected (by the 23 09 33 control system). Provide "compressor 1", "compressor 2", etc. terminals to match number of compressor cooling stages for units with multiple stages of cooling.

c. Heating operation when “common” and “heater” terminals are connected (by the 23 09 33 control System). Provide “heater 1”, “heater 2”, etc. terminals to match number of heating stages for units with multiple stages of cooling. For units with modulating heat capability provide unit with terminals and controls to accept a 4 to 20 mA signal from the 23 09 33 control system to allow the 23 09 33 control system to control unit heating.

d. Economizer operation shall be by 23 09 33. Damper actuators and sensors shall be field installed on the unit by 23 09 33, and controlled by the 23 09 33 control system.

3. Control Safeties: In addition to code required safeties, unit shall have safety controls to prevent operation that may be unsafe or damage the unit. Such safeties shall as a minimum include the following:

a. Heating: Pre-purge controls, proof of flame sensor, proof of combustion fan operation, and high temperature limit switch. Ignition system shall lock-out and require manual reset after 3 consecutive unsuccessful ignition attempts.

b. Cooling: Controls of all refrigeration system components, low refrigerant pressure safety, high refrigerant pressure safety.

4. Ambient controls: Unit shall have all necessary safeties and controls to allow operation at the specified ambient and room conditions.

N. Roof Curb: Provide vibration isolating seismic curb as specified in Section 23 05 48

O. Filters:

1. General: Units shall be provided with filter racks for accommodating 2" thick filters (unless noted otherwise), with minimum filter area (or sizes) as scheduled. Access panels to filters shall be hinged, with latches (or equivalent device) requiring no tools to open.

2. Filter Type: Shall be pleated panel, disposable type. Filter shall have MERV efficiency as scheduled on the drawings as evaluated by ASHRAE 52.2.

P. Accessories

1. Gas Flue Extensions: Provide manufacturers standard or custom fabricated welded stainless steel flue gas extension extending 3 feet higher than top of unit (or as indicated on plans), with flue size matching unit size (or as recommended by manufacturer). Provide drain weep hole at bottom at connection to unit.

2. Convenience Electrical Outlet: GFCI, 120V/15 Amp electrical outlet, for connection to power source separate from unit power. Outlet shall be mounted through unit cabinet, and have weatherproof hinged cover.

3. Electrical: Through the base electrical power connection.

4. Circuit Breaker and Disconnect: Thermal magnetic, molded case, HACR circuit breaker, wired from circuit breaker to unit terminal block. Provide with water tight enclosure having exterior access through a hinged cover.

Circuit breaker shall provide unit overcurrent protection and unit disconnect in accordance with NEC, UL, and code requirements. Shall be sized to properly handle unit electrical load, including power exhaust (where power exhaust is used).

5. Smoke Detector: Ionization or photoelectric type, with sampling tube (sized to match unit application), 2 sets form C contacts rated at 10 amps (115 VAC), 1 set form A contacts rated at 2 amps (30 VDC). For use with 115 VAC (or 24 VAC) power. Suitable for temperatures 32 deg F to 140 deg F, and air velocities up to 4,000 feet per minute. Unit shall be complete with plastic housing, clear plastic cover, gaskets, mounting hardware, visual indication of power and alarm, test/reset switch, and all accessories for proper operation. UL listed and complying with applicable codes and standards. Install in unit to sense return air (unless indicated otherwise).

6. Gas Piping: Through the base gas piping.

7. Coil Guard: Provide factory-installed louvered steel coil guards around perimeter of condensing section to protect the condenser coils, refrigerant piping and control components. Louvered panels shall be fabricated from heavy gauge galvanized steel and be rigid enough to provide permanent protection for shipping and pre-/post- installation. Course wire mesh is not acceptable.

8. Phase Monitor: 3-phase electric power monitor which detects loss of phase, low voltage, or phase reversal and stops unit operation after a time delay to prevent nuisance tripping with auto reset, “normal” indicator light and “trip” indicator light.

PART 3 EXECUTION

3.01 INSTALLATION

A. General: Comply with Section 20 05 00. Install in accordance with manufacturer’s written instructions, code, applicable standards, and best construction practices. Care shall be taken when moving and setting units not to damage roof, curb, units, or other items.

B. Location Verification: Install equipment at locations indicated in accordance with the Contract Documents. Prior to selecting unit installation locations and setting unit curb and unit, confirm that: unit curb properly matches building support structure; curb is level and dimensionally matches unit; installed duct locations match unit connection locations; manufacturer's pre-installation checklists have been completed; proper unit clearances and access will be provided; proper distances from plumbing vents and other vents; no adverse airflow conditions are present; and installation has been coordinated with other trades.

C. Gasketing: Provide gasketing around top of unit curb and where duct connections mate to unit.

D. Complete Connections: Connect and install all items shipped loose with units; provide and connect all utilities and accessories as required for proper unit operation.

E. Refrigerant Charge: Units shall be checked for proper refrigerant charge and oil level and re-charged as necessary. Refrigerant shall be delivered to the site in factory charged containers and charged into the system through a filter/drier.

F. Flue Extensions: Support rigidly from unit and so as to avoid transfer of heat and burning of paint on unit. Brace extension to accommodate wind forces.

G. Sheaves: Provide sheave changes for all belt driven fans as required to suit balancer or Engineer requirements.

H. Cleaning: Units shall be thoroughly cleaned (internally and externally) of all debris prior to operation. Units shall be clean and in new condition prior to Owner acceptance.

I. Operation and Maintenance:

1. General: Operation and Maintenance shall be in accordance with manufacturer's written procedures and recognized best maintenance practices. Keep records of maintenance and (upon request) forward to the Architect/Engineer prior to project final acceptance.

2. Stored Products: Provide maintenance (i.e. equipment rotation, lubrication, flush, cleaning, etc.) and inspection on products while stored to maintain new condition.

3. Installed Products: Provide maintenance and inspection of products and operate mechanical systems until substantial completion or specified Owner Instruction has been provided (whichever is later. Maintenance shall include all manufacturer's recommended maintenance (i.e. strainer cleaning, filter changes, bearing lubrication, belt tensioning, etc.). In addition to scheduled maintenance, review all equipment periodically to allow detection of improper operation or any special maintenance needs; review shall be consistent with best practices for the product but in no case less than every two weeks.

4. Operation Conditions: Units shall not be operated until all construction activities that generate dust, dirt, fumes, or odors are complete. Units shall not be placed into service until start-up has been completed.

J. Owner Instruction: Instruct Owner on equipment operation, including: system start-up, shut-down, emergency shut-down, normal control operation, safety aspects, maintenance and repair instructions.

3.02 START-UP

A. Pre Start-Up Inspection: Inspect equipment and connecting systems to confirm equipment and connecting systems have been installed properly and are ready for start-up. As a minimum, check for: proper voltage and phases, correct system refrigerant charge, correct electrical connections, complete control connections, all unit safety devices properly set and connected, heaters operational, fans free to rotate and rotating correctly, fans lubricated, belts tightened to proper tension, coils clear of obstructions, and other items as listed by the manufacturer are properly provided/connected and operating to ensure safe and proper start-up. If items are discovered that prevent start-up to be completed, notify the installing Contractor and Engineer of issues. Coordinate and re-schedule start-up after items are corrected.

B. Start-Up: Perform start-up in accordance with manufacturers written start-up procedures. Coordinate with any other trades needed to be present (i.e. balancer, control technician, etc.). Operate equipment in various modes to confirm proper operation. Observe proper operation of all unit components (heating, cooling, condenser fan, economizer, etc.). Observe unit to detect any unusual vibration, leakage, loose wiring, or other situations that could affect unit operation.

C. Adjustments: Adjust and set unit components to allow for proper operation (i.e. adjust fan sheaves, adjust fan speeds, unit settings, etc.).

3.04 COMMISSIONING

A. General: The Products referenced in this section are to be commissioned. The Contractor has specific responsibilities for scheduling, coordination, testing, and documentation of the commissioning. The Contractor shall provide a documented and signed record to verify that all equipment and systems installed under this contract have been inspected and functionally tested to verify full compliance with the contract specifications. See Section 20 08 00.

END OF SECTION

SECTION 23 82 46 – ELECTRIC HEATERS

PART 1 GENERAL

1.01 RELATED DOCUMENTS

A. Drawings and general provisions of the Contract, including General and Supplementary Conditions and Division 00 and Division 01 Specification Sections, apply to this Section.

B. Requirements of Section 20 05 00 apply to this Section.

1.02 WORK INCLUDED

A. Electric Heaters

1.03 SUBMITTALS

A. General: Comply with Section 20 05 00.

B. Product Data: Submit product information on all items.

1.04 GENERAL REQUIREMENTS

A. Listing: All heaters shall be listed by an independent testing laboratory for the application indicated.

B. Installation Verification: Prior to ordering units confirm finishes at heater location and type of installation and associated trim required; i.e. fully recessed, semi recessed, surface mount, etc.

PART 2 PRODUCTS

2.01 ACCEPTABLE MANUFACTURERS

A. Products: Shall comply with Section 20 05 00 Part 2.01 - Acceptable Manufacturers.

B. Wall Electric Heaters: Q-Mark, Chromalox, Berko, Markel.

2.02 ELECTRIC HEATERS

A. Type: Electric baseboard heater, architectural style, conventional appearance. Markel 3700 series.

B. Enclosure: Enclosure shall be fabricated of minimum 12-gauge aluminum. Support brackets shall be of steel construction. Junction box enclosure to have provisions for incoming and outgoing wiring with clamp for restraining wiring without additional hardware. Ground wire pigtail shall be provided in each junction box for grounding.

C. Size and Capacity: Length and heating capacity as indicated on the plans. Unit depth shall not exceed 3-inches; height shall not exceed 8.5-inches.

D. Heating Element: The heating element wire shall consist of nichrome wire encased in magnesium oxide in a stainless steel tube. Provide with wire guard along heater outlet.

E. Finish: Heater visible surfaces shall have factory applied off-white polyester powder coat paint finish.

F. Electrical: Heater shall be for use with power of voltage and phase as indicated on plans.

G. Controls:

1. Safety: Heater shall have a linear thermal cut-out, factory installed; cutout shall automatically shut off heater in event of overheating and reactivate heater when temperatures return to normal.

2. Thermostat: Heater shall have line voltage, integral (or wall mounted) electric thermostat for heater control.

3. Contactor: Provide with contactor for remote time schedule control of unit where required by the control sequence.

PART 3 EXECUTION

3.01 INSTALLATION

A. General: Comply with Section 20 05 00. Install in accordance with manufacturer's written instructions, code, applicable standards and best construction practices.

B. Coordination: Coordinate heater power and control requirements with other trades; confirm location of any required heater contactors, relays, thermostats, and similar devices. Provide any required wiring for proof of fan operation between fan devices and heater; wiring shall comply with the HVAC control portion of the specifications and Division 26.

C. Location and Trim Verification: Install equipment at locations indicated in accordance with the Contract Documents. Review and confirm installation locations, that proper clearances are provided, unit controls are accessible, and installation has been coordinated with other trades.

D. Complete Connections: Connect and install all items shipped loose with units; provide and connect all contactors, relays, wiring, interconnections and accessories as required for proper unit operation.

E. Cleaning: Units shall be thoroughly cleaned (internally and externally) of all debris prior to operation. Units shall be clean and in new condition prior to Owner acceptance.

F. Owner Instruction: Instruct Owner on equipment operation and maintenance.

3.02 START-UP

A. Pre Start-Up Inspection: Inspect equipment and connecting systems to confirm equipment and connecting systems to confirm equipment has been installed properly and is ready for start-up. As a minimum, check for: proper voltage and phases, correct electrical connections, complete control connections, all unit safety devices properly set and connected, coils clear of obstructions, and other items as listed by the manufacturer are properly provided/connected and operating to ensure safe and proper start-up. If items are discovered that prevent start-up to be completed, notify the installing Contractor and Engineer of issues. Coordinate and re-schedule start-up after items are corrected.

B. Start-Up: Perform start-up in accordance with manufacturers written start-up procedures. Observe proper operation of all unit components.

C. Adjustments: Adjust and set unit components to allow for proper operation. Observe unit to detect any unusual vibration, leakage, loose wiring, or other situations that could affect unit operation.

3.03 COMMISSIONING

A. General: The Products referenced in this section are to be commissioned. The Contractor has specific responsibilities for scheduling, coordination, testing, and documentation of the commissioning. The Contractor shall provide a documented and signed record to verify that all equipment and systems installed under this contract have been inspected and functionally tested to verify full compliance with the contract specifications. See Section 20 08 00.

END OF SECTION

SECTION 26 01 00 – ELECTRICAL GENERAL REQUIREMENTS

PART 1 GENERAL

1.1 SECTION INCLUDES

A. General requirements specifically applicable to Division 26 in addition to provisions of General Conditions, Supplementary Conditions, and Division 01.

B. General requirements of this section also apply to Divisions 27 and 28.

1.2 SCOPE OF ELECTRICAL WORK

A. Provide electrical systems and Work described, identified, specified, referenced, and shown in the Project Documents that are covered under Divisions 26, 27, and 28 of the Construction Specifications Institute (CSI) and/or as otherwise regulated by national, state, and local electrical codes. Electrical Work includes providing all equipment, materials, devices, appurtenances, and accessories necessary to provide complete and operating systems according to the intent of Project Documents.

B. Electrical work is not limited to Division 26, 27 and 28 specifications and what is shown on the electrical drawings. The Contractor is responsible to review all Project Documents for additional Electrical Work and requirements and to include this work as part of their scope under the Contract.

1.3 REGULATORY REQUIREMENTS

A. Comply with requirements of the following codes as adopted and supplemented by authority having jurisdiction:

ANSI/NFPA 70 - National Electric Code (NEC)
NFPA 101 - Life Safety Code
International Building Code (IBC)
International Mechanical Code (IMC)
WAC 296-46B - Washington State Electrical Safety Standards, Administration, and Installation
Washington State Energy Code (WSEC)

B. Comply with additional codes and regulations referenced in other sections.

C. Comply with additional codes and regulations required by authority having jurisdiction.

D. Obtain and pay for permits, plan review, and inspections from authorities having jurisdiction over work included under applicable Division Sections.

E. Include all testing, shop drawings, and documentation required by the inspection authorities for permitting and final approval.

1.4 SUBMITTALS

A. Comply with requirements of Division 01. Unless otherwise specified, furnish product data and shop drawings to Architect/ Engineer as follows:

1. Product information sheets shall be neat, readable, 8.5 x 11 inch, submitted in PDF format. Generic product sheets with multiple products or product descriptions shall clearly highlight or otherwise indicate which product is being furnished.

2. Furnish product submittals with index tabs between categories or in separate submittals that correspond to each section of the specifications. Transmittal shall indicate name of the Project, Owner, Architect, Engineer, Contractor, and Date of Submittal.
3. Furnish system design shop drawings in PDF format. Title block shall include Project, Owner, Contractor, and Date of Submittal.
4. Furnish product data and shop drawings specifically indicating any conflict or deviation from requirements of contract documents.

B. Confirm dimensions, ratings, and specifications of electrical materials, devices, fixtures, and equipment conform to project requirements prior to furnishing submittals. Coordinate electrical requirements with utilization equipment submitted under other sections and verify that voltage, phase, and rating are compatible with work shown in the electrical project documents.

C. Do not order materials or commence Work until applicable submittal has been reviewed and the Architect/Engineer has approved or taken other appropriate action.

1.5 SUBSTITUTIONS

A. Comply with requirements of Division 01. Products specified by naming one or more manufacturers establishes a basis for quality, styling, capacity, and function. Unless otherwise specified, written requests for substitution must be received at least 14 days prior to Bid Opening by Architect/Engineer who will determine acceptability of proposed substitution. Written acceptance must be obtained from Architect/Engineer prior to Bid Opening.

B. Substitution requests may be submitted for any manufacturer or named product unless specified as "no substitute".

C. Substitution approval does not relieve the Contractor of complying with the work requirements or the concept and intent of the project documents. Pay for any and all additional project costs that may be caused by Contractor requested substitutions, regardless of whether or not additional costs are overlooked, missed, or unforeseen, and regardless of when substitutions may be approved.

1.6 RECORD DOCUMENTS

A. Comply with requirements of Division 01. Maintain at project site one set of clean, dry, and legible red-lined record drawings for submittal at Contract Close-out. Record information concurrently with construction progress.

B. Indicate electrical changes in the contract documents. Include change orders, revised branch circuit and feeder wiring layouts, revised circuit identification, pull & junction boxes added during construction, and actual dimensioned location and routing of each underground conduit on record drawings.

1.7 LABELING

A. Where labeling that includes room names and numbers is required for any system to identify devices or for programming purposes, use final room names and numbers determined during construction. Verify room names and numbers with Architect prior to manufacturing labels or programming software.

1.8 OPERATION AND MAINTENANCE MANUALS

A. Comply with requirements of Division 01. Unless otherwise specified, furnish one labeled CD in PDF format and two duplicate hard copy printed sets of Operation and Maintenance Manuals prior to completion of contract. Submit hard copy manuals in labeled and indexed 3-ring binder(s).

B. Include the following information as applicable:

1. Names, addresses, and telephone numbers of the contractor, the installing sub-contractor, and the local representative for each system or equipment.
2. All approved product data and shop drawings.
3. Identify all manufacturer warranties which exceed one year.
4. Model number and serial number of each piece of equipment provided.
5. Data from test results performed under the Contract.

C. Operation and maintenance data shall include complete parts lists, installation and maintenance instructions, safety precautions, operation sequence describing start- up, operation, and shut-down, internal and interconnecting wiring and control diagrams with data to explain detailed operation and control, and testing methods for each system and item of equipment.

D. Furnish a draft copy of Operations and Maintenance Manual for Architect/Engineer review and incorporate comments prior to final submittal. Allow 14 days for Architect/ Engineer review.

1.9 CONFLICTS

A. Notify the Architect/Engineer of any conflicts or discrepancies before proceeding with any work or the purchasing of any materials related to the conflict or discrepancy until requesting and obtaining written instructions from the Architect/Engineer on how to proceed. Where conflicts occur, the most expensive and stringent requirement as judged by the Architect/Engineer shall prevail. Any work done after discovery of such discrepancies or conflicts and prior to obtaining the Architect/Engineer's instructions on how to proceed shall be done at the Contractor's expense.

1.10 WARRANTY

A. In addition to requirements covered under General Conditions or Division 01, include manufacturer product warranties that exceed one year. Assemble or list warranties that exceed one year in Operation and Maintenance Manuals indicating start date. Certificates of extended warranty shall identify the Owner as the beneficiary.

B. If the Electrical Contractor does not have offices located within 150 miles of the project, provide a service/warranty work agreement with a local electrical subcontractor approved by the Owner. The service/warranty work agreement shall extend for the contract warranty period, and a copy shall be included in the Operation and Maintenance Manuals.

1.11 INTENT OF PROJECT DOCUMENTS

A. Drawings and specifications are complementary and what is called for in either is binding as if called for in both.

B. The drawings are diagrammatic and show the general arrangement of the

construction and do not attempt to show all features of work, exact construction details, or actual routing of conduit and cable. Provide all necessary supports, off-sets, bends, risers, fittings, boxes, wiring, and accessories which are required for a complete and operating installation. Determine locations for required electrical outlets and connections prior to rough-in base on equipment product and installation submittal data and/or review of equipment on site.

C. The level of design presented in the documents represents the extent of the design being furnished to the Contractor; any additional design needed to perform the Work shall be provided by the Contractor. All design by the Contractor shall be performed by individuals skilled and experienced in such work, and where required by local code (or elsewhere in the documents) shall be performed by engineers licensed in the State where the project is located. Include in bid the costs of all such project design; including engineering, drafting, coordination, and all related activities and work. Contractor provided design services shall be included for but not limited to bidder design specifications, temporary electrical systems, layout routing to install the Work and share project space with other building systems, hanger and support systems, seismic bracing, preparation of shop drawings, locating and identifying requirements for equipment and fixture terminations, and methods/means of accomplishing the work.

1.12 COORDINATION

A. Examine architectural, civil, structural, and mechanical drawings and specifications and consult with other trades, as required to coordinate use of Project space and sequence of installation.

B. Arrange wiring and equipment to avoid interference with other work and to maximize accessibility for maintenance and repairs.

C. Coordinate with suppliers and installers to obtain product electrical data, shop drawings, and installation requirements for systems, equipment, and products furnished by Owner and/or other trades as required perform electrical work.

D. Contractor is responsible ensure that equipment, fixtures, and devices being furnished and installed shall fit the space available, taking into account connections, service access, and clearances required by product manufacturer and/or Code. Contractor shall make the necessary field measurements to ascertain the space requirements for proper installation, and shall furnish and/or install equipment so that final installation meets the intent of the Project Documents. If approval is received by Addendum or Change Order to use other than the originally specified items, Contractor shall be responsible for specified capacities and for ensuring that items to be furnished will fit the space available.

E. Contractor is responsible to review all the Project Documents and approved shop drawings provide under other divisions to identify and resolve conflicts between electrical systems and building construction, equipment, cabinets, counters, trim, and special finishes, prior to rough-in.

F. Facilitate coordination between low voltage system sub-contractors during construction. Include time for a minimum of one meeting with all sub-contractors prior to building rough-in to review requirements for each system per Section 26 05 30. Include a second meeting with all sub-contractors to review requirements for all systems utilizing IP structured cabling prior to cover.

1.13 REQUIREMENTS FOR EQUIPMENT FURNISHED UNDER OTHER SECTIONS OR BY OWNER

A. Provide power wiring, disconnect switches, electrical connection of equipment, installation of furnished electrical controllers, parts, and accessories, and field wiring for systems, equipment, and products furnished under other divisions or by Owner. Install controllers, operator stations, and control devices such as limit and temperature switches furnished with equipment.

B. Review equipment submittals prior to electrical rough-in and installation. Verify location, rating, size, type of connections, and required space requirements. Coordinate field wiring requirements and details with supplier and installer. Notify Architect/Engineer of conflicts between requirements for actual equipment being furnished and equipment indicated in contract documents prior to commencing Work.

C. Provide motor controllers and operator stations unless otherwise indicated on the project drawings.

D. Make final connections to equipment. Provide cord and plug where required for plug-in connection.

E. Integrated automation systems covered under Division 25 are not included as part of electrical work.

1.14 DEFINITIONS

A. Electrical terms used in these specifications are as defined in NEC Art. 100 unless otherwise noted.

B. Abbreviations: Where not defined elsewhere in the Contract Documents, shall be as defined in RS Means Illustrated Construction Dictionary.

C. Accessible Ceiling: Signifies access that requires the removal of an access panel or similar removable obstruction.

D. As Required: As necessary to form a safe, neat, and complete working installation (or product), fulfilling all the requirements of the specifications and drawings and in compliance with all codes.

E. Concealed: Hidden from view as in walls, trenches, chases, furred spaces, crawl spaces, unfinished attics, and above suspended ceilings.

F. Conduit: Includes conduit and tubing raceways.

G. Coordinate: Accomplish the work with all others that are involved in the work by directly discussing the work with them, arranging and participating in special meetings with them to discuss and plan the work being done by each, obtaining and completing any necessary forms and documentation required for the work to proceed, reaching agreement on how parts of the work performed by each trade will be installed relative to each other both in physical location and in time sequence, exchanging all necessary information so as to allow the work to be accomplished with a united effort in accordance with the project requirements.

H. Equipment Connection: Make branch circuit connection, mount and connect control devices as required. Provide disconnect and overcurrent protection when required by NEC and IMC, if not otherwise indicated or furnished with equipment.

I. Exposed: Exposed to view in any room, hallway, passageway or outdoors.

J. Finished Areas or Spaces: Areas and/or spaces receiving a finish coat of paint on one or more wall surface.

K. Furnish: Obtain and/or prepare and deliver to the project.

L. Indicated: Shown, scheduled, noted, or otherwise called out on the drawings.

M. Install: Enter permanently into the project complete and ready for service.

N. Open Cable or Wiring: Conductors above grade not installed in conduit or raceway.

O. Panel: Distribution panelboard, lighting and appliance panelboard, load center, and/or low voltage cabinet.

P. Provide: Furnish and install complete and ready for service.

Q. Wiring: Conductors in raceway or an approved cable assembly.

R. Verify: Obtain, by a means independent of the project Architect/Engineer and Owner, the information noted and the information needed to properly perform the work.

1.15 SCHEDULE OF VALUES

A. Provide Schedule of Values for use by Architect/Engineer to evaluate progress payment requests during construction.

B. Submit Schedule of Values using the line items included at the end of this Section.

PART 2 PRODUCTS

2.1 MATERIALS, EQUIPMENT

A. General: Furnish only products that are new and free from defects with a manufacture date that is less than six months from date of installation. Where product and applicable software updates or upgrades are available from the manufacturer, furnish the latest version unless otherwise specified. Furnishing discontinued products and/or products of manufacturers who are no longer in business is not permitted.

B. Listing and Labeling: Furnish and install only products that are listed and labeled by one or more of the following testing laboratories as approved by the Authority Having Jurisdiction:

Underwriter's Laboratories, Inc.	(UL)
ETL Testing Laboratories, Inc.	(ETL)
Factory Mutual	(FM)

C. Each specified product and system to be furnished shall be from a single approved manufacturer. Providing multiple product brands or manufacturers for each type or category, or for multiple units of the same specified product and/or system, is not permitted.

D. Products shall be delivered, handled, and stored per manufacturer recommendations. Protect fixtures, materials, and equipment from rain, water,

dust, dirt, snow, and damage. Do not install products that have marred, scratched, deformed, or otherwise damaged. Do not install products that have been wet or exposed to the weather prior to assembly and/or installation.

PART 3 EXECUTION

3.1 WORKMANSHIP

A. Electrical work shall conform to requirements of ANSI/NECA 1-2015, Standard Practice of Good Workmanship in Electrical Construction.

3.2 INSTALLATION

A. Provide all electrical work as specified and shown in the Project Documents. Provide all labor, equipment, material, accessories, and testing for electrical systems complete and operating. Include all scaffolding, rigging, hoisting, and services necessary for delivery and installation of materials and equipment.

B. Include all required software applications, licensing and associated system programming for electronic products. Provide all software to owner for onsite programming and interfacing

C. Provide as part of the Electrical Work all hangers, brackets, supports, framing, backing, accessories, incidentals, not specifically identified the project documents, but required to complete the system(s) in a safe and satisfactory working condition.

D. Quantity of materials and layout of the Work shall be provided based on field measurement of the actual project conditions and shall not be based on plan dimensions.

E. Provide all testing and documentation of electrical systems as required to demonstrate compliance with the Project Documents.

F. Provide testing, documentation, and filing required to comply with commissioning requirements of Section C408 of the Energy Code. Include documentation in Operation and Maintenance Manuals.

3.3 CUTTING AND PATCHING

A. Provide cutting and patching to complete electrical work and to provide openings in elements of Work for electrical penetrations. Comply with requirements of Division 01.

B. Locate and execute cuts so as not to damage other work or weaken structural components. Core drill or saw cut rigid materials.

C. Patch to restore to original condition. Refinish surfaces to match adjacent finishes. For continuous surfaces, refinish to nearest intersection; for an assembly, refinish entire unit.

Division 26 Schedule of Values

Division 26 Mobilization and Temporary Facilities

Utility Company Charges
Electrical Demolition
Electrical Site Work
- Lighting Systems Rough-in (Conduit, Handholes, Wire, Pole Bases - Material & Labor)
- Lighting Fixtures & Poles (Material & Labor)
- Power & Signal Rough-in (Conduit, Vaults, Wire - Material & Labor)
- Transformers, Switchgear (Material & Labor)

Lighting Systems
- Fixtures & Lamps Material
- Fixtures & Lamps Labor
- Branch Circuit Rough-in (Conduit and Wire - Material & Labor)
- Devices and Trim (Material & Labor)
- Performance Lighting System (Material & Labor)

Power Systems
- Distribution Equipment Material (Switchgear, Panels, Transformers, Starters, TVSS, Disconnects)
- Distribution Equipment Labor
- Feeder Rough-in (Distribution Conduit and Wire - Material & Labor)
- Branch Circuit Rough-in (Conduit and Wire for Devices- Material & Labor)
- Devices and Trim (Material & Labor)
- Equipment Circuit Rough-in (Conduit and Wire for Scheduled Equipment - Material & Labor)
- Equipment Connections (Material & Labor)
- Generator Package (Generator, Transfer Switch, Start-up - Material & Labor)

Electric Space Heating
- Heating Equipment Materials
- Heating Equipment Labor
- Heating Circuit Rough-in (Conduit & Wire - Material & Labor)

Signal Systems
- Fire Alarm Rough-in (Conduit and Wire - Material & Labor)
- Fire Alarm Trim (Equipment, Devices, Testing - Material & Labor)
- Clock/Intercom Rough-in (Conduit & Wire - Material & Labor)
- Clock/Intercom Trim (Equipment, Devices, Testing - Material & Labor)
- Telecommunications Pathway (Material & Labor)
- Telecommunications Premises Wiring (Material & Labor)
- Telephone System (Switch & Handsets - Material & Labor)
- TV System Rough-in (Conduit & Cabling - Material & Labor)
- TV System Trim (Equipment, Devices, Testing - Material & Labor)
- Public Address Rough-in (Conduit & Wire - Material & Labor)
- Public Address Trim (Equipment, Devices, Testing- Material & Labor)
- Intrusion Alarm Rough-in (Conduit & Cabling - Material & Labor)
- Intrusion Alarm Trim (Equipment, Devices, Testing - Material & Labor)
- Classroom Assisted Hearing System (Material & Labor)

Electrical Closeout (Punchlists, O&M Manuals, Record Drawings, Training)

END OF SECTION

SECTION 26 05 00 – BASIC MATERIALS AND METHODS

PART 1 GENERAL

1.1 SECTION INCLUDES

A. Conduit and Fittings

B. Building Wire and Cable

C. Wiring Connections and Terminations

D. Boxes

E. Wiring Devices

F. Supporting Devices

G. Single Station Smoke Detectors

H. Requirements for Fire Rated Construction

I. Earthwork for Underground Electrical

1.2 RELATED SECTIONS

A. Excavation and Backfill for Underground Conduit: Comply with Division 02 - Site Work Division 31 - Earthwork.

B. Materials and Methods for Utility Services: Comply with Section 26 05 80.

1.3 SUBMITTALS

A. Submit product data for conduit fittings, wire and cable, watertight connectors, wiring devices, and smoke detectors.

1.4 OPERATION AND MAINTENANCE DATA

A. Include data for wiring devices and smoke detectors in Operation & Maintenance Manuals.

PART 2 PRODUCTS

2.1 CONDUIT

A. Rigid Steel Conduit (RGS): ANSI C80.1; hot dipped galvanized.

B. Intermediate Metal Conduit (IMC): Hot dipped galvanized.

C. Electric Metallic Tubing (EMT): ANSI C80.3; galvanized tubing.

D. Flexible Metal Conduit: Galvanized steel. Heavy wall except reduced wall may be used where concealed in building construction.

E. Liquid Tight Flexible Metal Conduit: Galvanized steel, PVC jacket.

F. Non-Metallic Conduit: NEMA TC 2; EPC-40-PVC.

2.2 FITTINGS

A. RGS and IMC Conduit: ANSI/NEMA FB 1; threaded type. Provide hubs and connectors with insulated throat for conduit larger than 3/4 inch diameter

B. EMT Conduit: ANSI/NEMA FB 1; steel, compression type. Crimp-on, drive-on,

indenter, and set screw type prohibited. Provide connectors with insulated throat for conduit larger than 3/4 inch diameter.

C. Flexible Conduit: ANSI/NEMA FB 1; steel, single screw squeeze type.

D. Liquid tight Flexible Conduit: ANSI C33.84, steel. Provide PVC coated fitting where installed outdoors.

E. PVC Conduit: NEMA TC 3; solvent welded type, same manufacture as conduit.

F. Water and Vapor Conduit Sealants: Hydra-Seal S-50 conduit sealing putty or approved; Tyco/Rachem/TE blank duct plug or approved; Polywater FST conduit sealing foam system or approved.

G. Metal-Clad Cable: ANSI/NEMA FB 1; steel, single screw squeeze type with insulated throat.

H. Expansion Fittings for PVC Conduit: Same manufacture as conduit.

2.3 WIRE AND CABLE

A. Copper Building Wire, Interior: Type THWN-2, 600 volt insulation; conductors 8 AWG and larger shall be stranded. Type XHHW-2 may be substituted for conductor sizes 4 AWG and larger.

B. Copper Building Wire, Outdoors: Type RHW/USE-2, 600 volt insulation; conductor 8 AWG and larger shall be stranded.

C. Fire Rated Building Wire: Type RHH or RHW-2, UL2196, 600 volt insulation, copper conductor, UL classified 2-hour rated cable when installed in approved steel conduit system. Type RHH may be used only in dry locations.

D. Metal Clad (MC Cable): UL 1569; #12 AWG copper conductors, 600 volt 90 degree C rated conductor insulation, phase identified, with green insulated copper grounding conductor and steel outer covering. Include neutral conductor for switch legs per NEC 404.2(C). Provide PVC jacketed MC cable listed for the purpose where used in damp or wet locations or where otherwise indicated.

2.4 WIRE CONNECTORS

A. Connectors for Wire Size 10 AWG and Smaller: Insulated steel spring twist-on pressure connector with plastic cap. Outdoors use watertight type with prefilled sealant gel.

B. Connectors for Wire Size 8 AWG and Larger: Solderless mechanical or compression type with pre-formed or shrink sleeve insulated cover. Outdoors make watertight using shrink sleeve or pigtail cap and sealing mastic.

C. Outdoor Taps Below Grade for Wire Size #6 AWG and Larger: Ilsco PED series underground multi-tap, wire range and number of ports as required.

D. Gutter/Wireway Taps for Wire Size #6 AWG and Larger: Ilsco type PDB series AL/CU lug type distribution block, number of poles and quantity/size of primary/secondary lug ports as required for the application.

E. Connectors at Pole Bases: WSDOT Spec 9-29.7; waterproof quick-disconnect. Provide fused type for ungrounded conductors

2.5 BOXES

A. Outlet Boxes: ANSI/NEMA OS 1; galvanized sheet steel, with 1/2-inch male

fixture studs or plaster rings as required. [Non-metallic boxes conforming to ANSI/NEMA OS2 may be used where recessed for NM cable installation.]

B. Surface Outlet Boxes Below 8 Feet: Cast aluminum or malleable iron, threaded hubs.

C. Surface Outlet Boxes for Outdoor and Wet Locations: [Cast aluminum with baked enamel or epoxy finish] [Fiberglass reinforced polyester (FRP)], gasketed cover, stainless steel hardware. Outlet boxes shall have threaded hubs.

D. Concrete and Masonry Boxes: Galvanized steel, suitable for the purpose.

E. Junction and Pull Boxes: Outlet box with blank cover except boxes larger than 4-inch square shall be screw cover type, galvanized steel with grey enamel finish, NEMA 1 indoors and NEMA 3R outdoors, unless otherwise indicated.

F. In-Ground Boxes: Concrete [structural plastic] type with locking cover. Provide traffic ratings, dimensions, features, and installation requirements indicated.

G. Work Station Outlets: SMI Spider/Hubbell Multi-Connect System recessed wall box with almond (ivory) trim plate and one internal movable barrier. Provide 4 or 6 gang outlet as indicated.

H. Concealed Service Floor Boxes: Hubbell HBLCFB series for concrete floors, with steel flush cover/carpet flange assembly, listed for scrub water exclusion. Provide 301 base for maximum 4-gang device applications. Where large capacity box is indicated, provide 501 base for maximum 8-gang applications.

I. Flush Service Floor Boxes: Hubbell 2536 series, concrete tight, cast iron, adjustable. Finish as specified under service fittings.

J. Flush Service Floor Boxes, Wood Floors: Hubbell 2588 series non adjustable. Finish as specified under service fittings.

K. Fire Rated Construction: Recessed outlet boxes and rough-in cans that are installed in 2 hour rated area separation walls shall be UL listed with 1-1/2 hour rating label.

L. Barriers: Provide permanent barriers in outlet boxes to separate adjacent wiring devices where voltage exceeds 300 volts. Provide permanent voltage separation barriers in outlet and junction boxes to separate wiring above 100 volts from wiring below 100 volts and where otherwise required by Code.

M. Color Coding of Device and Junction Boxes for Special Systems: Field painted or otherwise manufactured in the specified color, both inside and outside of box and cover. Provide color identification for the following electrical systems: Fire Alarm System - RED, Emergency Systems (NEC 700) - ORANGE.

N. Sound Attenuation Wrap: UL listed, 0 VOC, sound attenuating wrap for sealing around outlet boxes. SpecSeal SSP Putty Pad or approved.

2.6 WIRING DEVICES

A. Wall Switches: Hubbell 1221, Leviton 1221, Pass & Seymour 20AC1, Cooper 2221; specification grade, 20 ampere, 277 volt, quiet type. Single pole, double pole, 3-way, 4-way as required. Color: Ivory

B. Wall Switch with Integral Pilot Light: Hubbell 1221-PLG, Leviton 1221-PLG, Cooper 1221-PLG, Pass & Seymour 20ACI-GPL, specification grade, 20

ampere, 120 volt, quiet type, single pole, 1 horse-power rated, green pilot light illuminates when switch is on. Color: Ivory.

C. Wall Switches, Key Type: Leviton 1221 with 55500 key, no substitute.

D. Duplex Receptacles: Specification grade 5362 series, NEMA 5-20R, grounding type, as manufactured by Hubbell, Leviton, Pass & Seymour, Cooper. Color: Ivory.

E. Duplex Receptacles, Patient Care Areas of Health Care Facilities: Hospital grade, NEMA 5-20R, grounding type, with permanent special purpose identification visible on the device, as manufactured by Hubbell, Leviton, Arrow Hart, Pass & Seymour, Cooper. Color: Ivory except receptacles on emergency circuit shall be red.

F. Duplex Receptacles, Counter Tops and Work Surfaces: Same manufacturer, rating, and style as specified for duplex or GFCI receptacles except receptacle assemblies in counter tops shall be listed for countertop applications and Work surfaces shall be listed for work surfaces or countertop applications.

G. Duplex Receptacles, Controlled: Same manufacturer, rating, and style as specified for duplex receptacles except devices shall have special purpose identification symbol and permanently marked with the word “controlled” visible on face of each receptacle automatically controlled. Color: as selected. Automatic control devices for receptacles are specified under Section 26 09 20, Lighting Controls.

H. Ground Fault Circuit Interrupter (GFCI) Receptacles: Same manufacture, rating, and color as duplex receptacles except devices shall comply with UL 943, Class A, with self test.

I. Duplex Receptacles, Dwelling Units, Guest Rooms & Suites, Child Care Facilities: Same manufacture, rating, and color as duplex and GFCI receptacles except devices shall be UL listed as tamper resistant and permanent special purpose identification shall be visible on the device.

J. Duplex Receptacles, Weather Resistant for Damp and Wet Locations: Same manufacture, rating, and color as duplex and GFCI receptacles except devices shall be UL listed as weather resistant and permanent special purpose identification shall be visible on the device.

K. Isolated Grounding (Computer Purpose) Receptacles: Same manufacture, design, and color as duplex receptacles except ground terminal shall be isolated from device mounting strap and permanent special purpose identification shall be visible on the device.

L. Special Purpose Receptacles: NEMA WD 5, same manufacture as duplex receptacles; premium specification grade, grounding type, NEMA configuration as indicated on project plans, black color. Provide matching plug for each receptacle.

M. Flush Mounted Device Plates: Super heavy duty for high abuse application, rigid high impact thermoplastic, smooth finish, color to match device. Thermoset, phenolic, urea, nylon, and flexible polycarbonate not approved. Cooper PJ series manufacture or approved.

N. Surface Mounted Device Plates: Raised galvanized steel on steel boxes; cast or

stamped sheet aluminum on cast boxes.

O. Damp and Wet Location Device Plates: ANSI/UL 514D; Commercial grade, low profile, lockable, die cast metal cover assembly, listed as weatherproof when in use and identified as extra duty. Hubbell/TayMac MX series or approved.

2.7 SUPPORTING DEVICES

A. Metal Conduit Clamps & Straps: Steel, screw type; zinc or cadmium plated minimum indoors, hot dipped galvanized minimum outdoors.

B. Support Channel: Slotted 12-gauge steel channel with fittings, fasteners, brackets, clamps, floor plates, and accessories required; Pre-galvanized zinc coated (G90) indoors, ASTM 123 hot dipped galvanized outdoors.

C. Fasteners: Expansion anchors in concrete and solid masonry; toggle bolts in hollow masonry, plaster, or gypsum board wall construction; sheet metal screws in metal construction; wood screws in wood construction; set screw type beam clamps on steel columns and beams; U.L. listed clips for metal studs. Metal parts and accessories to be zinc or cadmium plated minimum indoors and hot dipped galvanized minimum outdoors.

D. Support Wires: Support wires above accessible ceiling grids, steel #12 AWG minimum.

E. Roof Supports: Do not install conduit exposed on roofs. Free standing, stackable, 7.5 inch square, one piece molded PVC pipe support with

2.8 ACCESSORIES

A. Air-Vapor Barriers:

1. Pre-molded polyethylene box installed in all exterior framing walls (thermal envelope) around recessed outlet boxes.

2. Foam electrical outlet gaskets for installation between device plate and finished outlet. Conceal behind device plate.

B. Pulling Wire:

1. Interior; continuous fiber pulling line, 190# tensile strength.

2. Below grade; Polyester measuring pulling tape 5/8-inch wide, 1800# tensile strength. Muletape.

C. Warning Tape: 6 inch wide detectable underground warning tape, black lettering, on red background for high voltage, yellow background for medium voltage and general utility, orange background for low voltage, with wording to describe buried installation.

D. Corrosion Protection Metal Conduit Tape: 3M Scotchrap 10 mill PVC All Weather Corrosion Protection 50 tape and pipe primer system, or approved.

2.9 SINGLE STATION SMOKE AND CARBON MONOXIDE (CO) DETECTORS

A. UL 217, UL 2034; 120 VAC direct wired combination ionization smoke and CO detector with battery back-up, integral horn rated 80 dB minimum at 10 feet, power-on LED, test switch, automatic reset, and white housing. Detector shall be capable of interconnecting with additional units for common alarm. Non combination devices may be used when approved or otherwise required.

BRK/First Alert, Kidde, or approved.

2.10 FIRE RATED CONSTRUCTION

A. Products for Fire Stopping to Seal Around Enclosures and Annular Space between Conduit and Building Construction at Conduit Penetrations: ANSI/UL 1479; Comply with requirements of Division 07.

B. Conduit Sleeves for Open Cable: ANSI/UL 1479; Fire stop conduit sleeve kit, with mounting escutcheons, gaskets, end bushings, warning labels, and non-hardening fire stop putty. SpecSeal READY SLEEVE, FS100 (1 inch diameter sleeve) and FS200 (2 inch diameter sleeve), or approved.

C. Pathway Sleeves for Open Cable, Greater than 2 Inch Diameter: ANSI/UL1497; Fire stop rectangular sleeve kit, 3-inch wide by 3-inch high by 10.5-inch length, expandable in 6-inch increments, self-contained integral fire sealing system that automatically adjusts to the installed cable loading. Provide radius control modules (each end of pathway), single or multiple gang wall kits, and expansion modules as required. Specified Technologies, Inc., EZ-Path System Series 33 or approved.

PART 3 EXECUTION

3.1 WIRING METHODS

A. General:

1. Fixed wiring shall be conductors installed in conduit.
2. Conceal all wiring within construction unless otherwise noted on drawings or specifically authorized by the Architect/Engineer.
3. Where contractor wiring methods require the application of conductor ampacity adjustment or correction factors under NEC 310.15, the contractor shall submit calculations that show Code compliance, except the adjusted ampacity of the conductors installed shall not be less than the circuit overcurrent device rating shown or specified.
4. Conduit sizes shall not be reduced to smaller size than shown or otherwise noted on plans.
5. Feeders shown or otherwise noted on plans shall not be combined to share a common conduit homerun. Branch circuit homeruns shown or otherwise noted on plans shall not be combined to share a common conduit with other circuits.
6. Device Plates: It is the electrical contractor’s responsibility to ensure that all line voltage and low voltage system faceplates and visible trim pieces are the same color. Exception: Where stainless steel device plates are used for line voltage systems, low voltage systems may use non-metallic plates of the same color.

B. Conduit Requirements:

1. Rigid Steel Conduit (RGS): May be used in all areas. Required at penetrations thru fire rated construction rated greater than 1 hour,
2. Intermediate Metal Conduit (IMC): May be used in all areas except where

RGS is required or indicated.

3. Electrical Metallic Tubing (EMT): May be used in dry and damp locations where not subject to damage. May not be used in concrete, where in contact with earth, or where RGS is required or indicated. May not be used for service entrance conductors inside a building. Maximum trade size 2 inches.

4. Flexible Conduit: May be used concealed in casework and where concealed in walls, up to 1 inch maximum trade size. Required for final equipment connections (maximum length 36 inches), to recessed lighting fixtures from an outlet box (maximum length 72 inches), and where raceway passes thru seismic joints. Use liquid tight in damp or wet locations.

5. Rigid Non-Metallic Conduit (PVC): May be used underground. May be used within buildings where encased in not less than 2 inches of concrete. Terminate inside building using RGS or IMC elbow and riser to first coupling above slab on grade.

C. Wire and Cable Requirements:

1. Use copper conductors.

2. Metal Clad (MC) Cable: May only be used for fixture whips and for branch circuit wiring where concealed in walls between wiring devices in finished spaces of 300 SF or less, and extending no more than 72 inches to first junction box in a crawl space or above an accessible ceiling. May not be used for branch circuit homeruns, feeders, or services. May not be used in mechanical ducts or fabricated air plenums. May not be used for any portion of a homerun to a single outlet or device. May not be used in concrete or below concrete slabs on grade. May not be used between floors.

3.2 SUPPORT - GENERAL

A. Support wiring, conduit, raceways, boxes, equipment, and fixtures from building structural members. Provide additional framing, channel, or listed support attachments as required to span or support between structural members and to avoid interference from pipes, ducts, and other equipment.

B. Do not install support anchors to penetrate thru roof deck.

C. Do not violate the integrity or exceed the capacity of the building structure used for support. Provide/fabricate additional support elements to transmit loads to the floor or other parts of the building structure that can carry the load as approved by the Architect/Engineer.

3.3 CONDUIT SIZING, ARRANGEMENT, AND SUPPORT

A. Minimum conduit trade size 1/2-inch diameter except all homeruns and where installed below grade outdoors conduits shall be 3/4-inch minimum diameter. Prewired 3/8 inch diameter flexible conduit not to exceed 72 inches in length may be used for fixture whips from an outlet box to recessed light fixture.

B. Arrange conduit to maintain headroom and present a neat appearance.

C. Route conduit parallel and perpendicular to walls and adjacent piping.

D. Maintain 12-inch clearance between conduit and heat sources such as flues, steam pipes, and heating appliances.

E. Locate holes in joists within center third of member depth measured from the edge and at least 24 inches from load bearing points. Maximum hole diameter one inch.

F. Support conduits from building structure with conduit straps or rods and hangers. #8 solid wire and CADDY clips may be used to hang 3/4-inch diameter conduit and smaller above accessible ceiling spaces.

G. Group conduit in parallel runs where practical and use conduit rack constructed of steel channel with conduit straps or clamps. Provide space for 25 percent additional conduit.

H. Do not support conduit with perforated pipe straps or tie wraps. Remove all wire used for temporary conduit support during construction, before conductors are pulled.

I. Do not bore holes in truss members or notch structural members.

J. Steel conduit installed as part of a 2 hour fire rated wiring assembly shall be supported 5 feet on center where required by the cable system installation requirements.

3.4 CONDUIT INSTALLATION

A. Use conduit hubs or sealing locknuts for fastening conduit to cast boxes and for fastening conduit to sheet metal boxes in damp locations.

B. Use conduit bodies to make sharp changes in direction, as around beams.

C. Use factory elbows for PVC conduit and for bends in metal conduit larger than 1-inch. Conduit bends for signal systems that are greater than 45 degrees shall be minimum radius sweeps as follows:

Under 2 inches	Standard radius
2 inches - 3 inches	24 inch radius
Over 3 inches	36 inch radius

D. Use factory RGS elbows for PVC conduit runs below grade.

E. Install insulated bushings on each end of conduit larger than 1-inch.

F. Use suitable conduit caps to protect installed conduit against entrance of dirt and moisture.

G. Install pull wire in empty conduits.

H. Conduit in Concrete Slabs Above Grade: Do not install in concrete slabs above grade except where written approval and installation requirements are provided by the Architect/Engineer.

I. Metal Conduit Installed Below Grade: Provide 20 mil thick factory PVC coating or field wrapped using corrosion protection tape and primer system with 50 percent wrap overlap; extend 8 inches above grade at risers.

J. Conduit Below Concrete Slabs On Grade: Install at minimum depth required for vertical penetration of radius bend at conduit risers, except install at minimum 48 inch depth for power systems above 600 volts and for feeders below 600 volts and rated 1000 amps and larger. See paragraph Earth Work for Underground Electrical under this section for thermal backfill requirements.

K. Underground Conduit for Site Power (Below 600 Volts) and Signal Systems: Install to provide 24 inches minimum cover up to final grade unless otherwise indicated or specified. Maintain minimum 7.5 inch on center spacing between power conduits; maintain minimum 12 inch spacing between power conduits and signal conduits; maintain minimum separation from public utilities established by regulation. See paragraph Earth Work for Underground Electrical under this section for thermal backfill requirements.

L. Conduits at Roof Decks: Conduit installed within 1.5 inches of the nearest surface of metal corrugated roof decks and conduit concealed within roofing systems on top of roof decks shall be RGS or IMC conduit.

M. Install flexible conduit thru oversized bushed sleeve or cored opening where conduit crosses building wall expansion or seismic joints. Provide up to 54 inches of flexible wiring with 6 inches minimum of conduit slack each side of the wall assembly to allow for free movement across the joint.

N. Do not install conduit in concrete slab on grade.

O. Do not install conduit in direct contact with underside of roof deck.

P. Seal all underground conduits entering and terminating within a building or structure using approved non hardening duct seal putty or a sealing bushing. Seal spare conduits using a watertight blank plastic duct plug. Seal all underground conduits entering and terminating below grade, such as in a crawl space or basement, using an approved closed cell foam sealant system.

3.5 CONDUIT PENETRATIONS

A. Roof Penetrations: Provide sheet lead flashing (4 pounds per square foot) around each conduit which penetrates a roof. Extend 10" in all directions from conduit, and up 8" on conduit sized to match conduit diameter. Seal top of flashing around conduit with a weatherproof non-hardening mastic.

B. Exterior Walls: Core drill or cast sleeve for each conduit one size larger than conduit diameter. Seal all openings at each penetration with acrylic weatherproof caulking suitable for painting. Below grade seal with "Chase-Foam" silicone sealant or other approved method acceptable to Architect/Engineer.

C. Interior Walls and Partitions: Cut one size larger than conduit diameter. Seal all openings at each penetration with low VOC level general purpose interior sealant as specified in Section 07900.

D. Fire Rated Construction: Comply with requirements of paragraph, FIRE RATED CONSTRUCTION, this specification.

3.6 METAL CLAD CABLE

A. Arrangement and Support: Comply with requirements specified for conduit. Provide maximum support spacing of 6 feet on center and within 12 inches of terminations.

3.7 CONDUCTOR INSTALLATION

A. Minimum Conductor Size: #12 AWG, except #10 AWG minimum for outdoor and exterior building lighting circuits and #14 AWG minimum for control circuits and for lighting fixture taps not to exceed 72 inches.

B. Splice conductors only in junction or outlet boxes and handholes.

C. Arrange conductors neatly at termination such that a clamp-on ammeter may be used.

D. Clean conduit free of debris before conductor installation; install conductors using pulling lubricant.

3.8 CONDUCTOR IDENTIFICATION

A. Provide non-metallic wire markers on each conductor in panelboards and in junction boxes having more than 6 conductors. Identify branch circuit or feeder number for power and lighting circuits.

B. Color Coding of Insulated Equipment Ground: Solid green.

C. Color Coding of 208/120 Volt System: Phase A - black, Phase B - red, Phase C - blue, Neutral - white.

D. Color Coding of Switch Legs: Pink.

E. Color Coding of Travelers (3-Way and 4-Way Switching): Purple.

F. Provide color tracers on neutrals to differentiate circuits on multi-wire branch circuits with separate neutrals.

3.9 BOX LOCATIONS

A. Provide electrical boxes for outlets, junctions and equipment connections as shown and as required for splices, taps, wire pulling, and code compliance.

B. Electrical box locations shown are approximate unless dimensioned. Obtain equipment outlet locations from equipment manufacturer prior to rough-in. Coordinate outlet and wall switch locations with casework and finish elements shown on Architectural drawings. Install to fit conditions or as directed.

C. Change location of wall outlets, wall switches, and lighting outlets up to fifteen feet without charge when requested by Architect/Engineer prior to installation.

D. Height of outlets unless otherwise directed: See Drawings.

3.10 BOX INSTALLATION

A. Set wall outlet and wall switch boxes vertically.

B. Support boxes independently of conduit, piping, and ductwork; securely fasten in place.

C. Provide recessed outlet boxes in finished areas. Flush front edge of box or plaster ring even with finished surface.

D. Provide blank cover plate over all boxes that do not contain devices or are not covered by equipment.

E. Do not install flush boxes on opposite sides of a wall within the same stud space. Maintain 24 inch minimum box separation in fire rated wall assemblies.

F. In-Ground Boxes: Set on 9 inch minimum deep gravel base extending 6 inches minimum beyond each side. Set flush with final grade.

3.11 WIRING DEVICES

A. Ground Fault Circuit Interrupter (GFCI) Protection: Provide for receptacles

located outdoors, within 6 feet of sinks, in bathrooms, kitchens, indoor wet locations, locker rooms with associated shower facilities, elevator pits, elevator machine rooms, crawl spaces, garages, service bays, rooftops, at counters and work surfaces where food and/or beverage preparation occurs, and as otherwise indicated. GFCI receptacles are not required where branch circuit is protected by GFCI circuit breaker.

3.12 SINGLE STATION SMOKE DETECTORS

A. Install in accordance with manufacturer's instructions.

B. Interconnect all detectors with-in single dwelling or apartment unit for common alarm.

3.13 FIRE RATED CONSTRUCTION

A. Verify location of fire rated walls and ceilings with Architectural plans prior to rough-in.

B. Installation of boxes, rough-in cans, conduits, and sleeves that result in membrane or through penetrations shall comply with IBC 712.1 through 712.4 as required to maintain fire rating of construction assembly. Coordinate locations and construction requirements with General Contractor.

C. Provide approved conduit and/or pathway sleeve kits for installation of open cable through fire rated construction.

3.14 EARTHWORK FOR UNDERGROUND ELECTRICAL

A. Locating and Protecting Existing Utilities: Existing utilities in areas of new construction must be identified and located by the Contractor prior to commencing Work. Location of underground utilities shown on plans are diagrammatic and shall not be considered as a complete representation of all utilities that may exist on site.

1. Coordinate with Owner to identify and locate existing underground utilities including landscape irrigation in areas of Work.

2. Prior to excavation, contact and coordinate with local Utilities Underground Location Center to identify and locate existing underground public utility services in areas of Work, including power, water, sewer, telephone, gas, and cable TV.

3. Prior to excavation, obtain services of a utility locator service to scan areas of Work and to locate and mark where known and unknown private underground utilities or other interfering obstructions exist.

4. Existing active utilities damaged or interrupted by the Contractor during construction shall be replaced at the Contractor's expense. Repairs to power and signal systems using junction boxes or splices will not be accepted.

B. Excavation and Backfill: Comply with requirements of Division 31.

C. Thermal Resistivity of Bedding and Backfill Around Cable and Conduit Not Concrete Encased: Provide suitable materials that have a maximum thermal resistivity (Rho) of 90 when compacted and moist. Native or imported materials shall be approved by the Civil Engineer to verify thermal compliance. Man made and/or mixed materials shall be provided with a certification by the manufacturer

verifying thermal compliance.

D. Thermal Backfill to Dissipate Conductor Heat: Low strength fluidized thermal backfill (FTB) shall be used for underground wiring above 600 volts and for underground wiring below 600 volts that is rated 2000 amps and above. Conform to local electric utility FTB specifications.

E. Finish Operations:

1. Restore all surfaces disturbed by new construction to its original grade and condition unless otherwise indicated. Comply with requirements of Divisions 31 and 32.

2. Landscape materials shall be similar type and quality as that removed. New topsoil shall be three-way mix (50% black silt sand, 30% peat moss, 20% chicken manure), 2-inch minimum depth. Top dress and seed damaged turf areas using approved seed mix and application rate. Repair paved surfaces as indicated.

3. Correct settling that occurs during the project warranty period. Restore grade, appearance, quality, and condition of surface or finish to meet original Contract requirements.

3.15 LABELING

A. Outlets: Identify panel and circuit number on faceplate of convenience and special purpose outlets. Use self-adhesive, polyester or vinyl laminated labels with machine generated alpha-numeric circuit identification, 1/4-inch high black letters on clear background. Exception: Use white letters on black or brown color device plates.

B. Junction Boxes: Label or mark cover with panel and circuit number. Locate on inside of cover except locate on outside of junction box cover in attics, crawl spaces, equipment rooms and above accessible ceilings.

3.16 TESTS

A. Perform continuity test on all feeder and branch circuit conductors. Verify proper phasing and that no short circuits or accidental grounds exist.

B. Check all convenience outlets for correct wiring connections using a polarity circuit tester. Test AFCI and GFCI circuits for proper operation with an approved tester.

C. Torque test conductor lug terminations to manufacturers recommended values.

END OF SECTION

SECTION 26 05 26 – GROUNDING AND BONDING

PART 1 GENERAL

1.1 SECTION INCLUDES

A. Power System Grounding

B. Electrical Equipment and Raceway Grounding

C. Communication System Grounding

1.2 OPERATIONS AND MAINTENANCE DATA

A. Include data on testing procedures, obtained test values, and correction of deficiencies in the Operation and Maintenance Manuals.

PART 2 PRODUCTS

2.1 MATERIALS

A. Ground Rods: Copper-clad steel, 3/4-inch diameter, 10 feet long unless otherwise indicated.

B. Mechanical Connectors at Accessible Ground Rods: Tin-plated, heavy duty, high strength, corrosion resistant copper alloy, hex head bolt and clamp.

C. Mechanical Connectors at Ground Connections: Heavy duty, solderless, bolted pressure or compression type connectors or clamps labeled as being suitable for the purpose. Manufacturer's standard grounding lug when furnished as part of panelboards and other equipment.

D. Exothermically Welded Connections: Copper Thermit weld process conforming to manufacturer's instructions; use molds, weld material, tools, and accessories supplied by the manufacturer. ERICO CADWELD or equal.

E. Ground and Bonding Conductors: Bare, soft drawn copper; stranded for 8 AWG and larger, unless otherwise indicated or specified. Equipment grounding conductors may be insulated with green color identification per Code.

F. Grounding Bus Bars: UL 467; 1/4-inch thick x 4-inch high tin plated copper bus with predrilled holes for bolted lug terminations, 2-inch high insulated spacers, and stainless steel standoff wall brackets. Provide 16 inch long with holes for (8) horizontal terminations unless otherwise indicated.

PART 3 EXECUTION

3.1 INSTALLATION

A. Ground electrical service system neutral per Code. Size grounding electrode conductor, main bonding jumper, equipment bonding jumpers, and supplemental electrode bonding connections per applicable paragraphs of NEC Article 250 except when larger size is shown or specified. Minimum of two (2) NEC 250.52 permitted grounding electrodes must be installed and shall include a concrete encased electrode where concrete building foundation is provided.

B. Make grounding connections which are buried or otherwise inaccessible using

exothermic welds. Where installed outdoors, bury ground conductors with minimum 18 inches of cover unless otherwise indicated.

C. Driven Electrodes: Drive ground rods full depth unless otherwise indicated or specified. Provide 15 feet minimum separation between driven electrodes.

D. Equipment Grounding Conductor: Provide separate insulated green equipment grounding conductor in feeders and in branch circuits [to plug-in outlets]. Provide equipment grounding conductor in non-metallic conduits and flexible conduit. Size equipment grounding conductors per NEC 250.122 unless larger size is shown or specified.

E. Provide grounding locknuts on each end of feeder conduits serving panelboards. Exception: Provide grounding bushing with bonding jumper where conduit is used as equipment ground.

F. Provide conduit sleeves where ground conductors pass through concrete slabs. Metal conduit sleeves shall have threaded end extending above slab to accommodate a grounding bushing or conduit hub per NEC 250.64(E).

G. Provide minimum 1/0 AWG conductor for communications service grounding. Leave 10 feet slack conductor at terminal board. Connect conductor to building ground electrode system.

H. Ground exposed non-current carrying metal parts of equipment fastened in place or connected by permanent wiring and likely to become energized per Code. In MDF and in IDF rooms, bond cable trays and equipment racks to terminal board ground bus using #6 minimum AWG conductor.

I. Concrete Encased Electrode: Provide 20 feet minimum of bare copper conductor encased by at least 2 inches of concrete and located within and near bottom of concrete foundation or footing that is in direct contact with earth. Size electrode to match grounding electrode conductor or No. 4 AWG, whichever is larger. Provide 3/4-inch non-metallic conduit sleeve where conductor enters concrete foundation.

J. Grounding Bus Bars: Provide at building electrical service entrance and at all telecommunication terminal boards. Install 12 inches above floor unless otherwise indicated.

3.2 ISOLATED GROUNDING SYSTEMS

A. Provide a separate insulated grounding conductor, green with yellow stripe, and connected to ground only at service or separately derived power source.

B. Metal conduit may serve as separate equipment grounding means where an isolated ground conductor is provided, unless otherwise indicated. Exception: Provide separate equipment grounding and isolated grounding conductors in conduits which serve both isolated and non-isolated plug-in outlets.

END OF SECTION

SECTION 26 05 30 – LOW VOLTAGE ELECTRICAL SYSTEMS PATHWAY

PART 1 GENERAL

1.1 SECTION INCLUDES

A. Conduit sleeves, risers, and horizontal pathways and outlet rough-in for structured cabling and other low voltage systems to include lighting control, access control, and video surveillance (CCTV).

B. Telecommunications Terminal Boards

1.2 RELATED SECTIONS

A. Section 26 05 00, Basic Materials & Methods

B. Section 26 05 26, Grounding & Bonding

C. Section 26 09 20, Lighting Controls

D. Section 27 10 01, Telecommunications Structured Cabling System

E. Section 28 23 00, Video Surveillance System

PART 2 PRODUCTS

2.1 OUTLETS

A. General: 4-11/16-inch square x 2-1/8-inch deep outlet box with single gang plaster ring. Provide blank device plates on unused outlets. Provide multi-gang box and/or plaster ring where otherwise indicated on plans.

B. Option for outlets in hollow frame walls without insulation and below accessible ceiling space: Single gang low voltage metal mounting ring suitable for use without a backbox. Provide blank device plates on unused outlets.

2.2 MATERIALS

A. Boxes, Conduit, Raceway, Device Plates: Comply with section 26 05 00.

B. Fire Rated Sleeves: Comply with section 26 05 00.

2.3 TELECOMMUNICATIONS TERMINAL BOARDS

A. 3/4-inch plywood mounting board with Class A fireproofing, locations and size as indicated. Paint white with two (2) coats of fire retardant paint. At least one fire retardant stamp or permanent label shall be visible on each sheet of plywood.

PART 3 EXECUTION

3.1 INSTALLATION

A. General: Comply with Section 26 05 00.

B. Outlets:

1. Mounting height unless otherwise directed: See Drawings.
2. Do not install signal outlets on same side of wall stud common with electrical outlets or vertical power wiring.

3. Conduit: Comply with requirements of Section 26 05 00. Unless otherwise indicated, provide conduit concealed inside wall or casework from each outlet up to nearest accessible ceiling space of same floor or homerun under floor to nearest terminal. Terminate conduit with plastic bushing. Install maximum two 90 degree equivalent bends between raceway terminations. Minimum conduit sizes unless otherwise indicated:

Voice and/or Data	1-inch diameter
All Other Systems	3/4-inch diameter

4. Outlets without backbox: Provide two (2) nylon pull cords in wall cavity from each outlet up to accessible ceiling space. Provide protective bushing where pull cords exit top of wall plate. Provide 2-gang trim ring where pull cords exit vertical partition wall above ceiling.

C. Install nylon pull cord in each conduit longer than 20 feet. Leave 18 inches of slack minimum each end. Tag end of pull cord at conduit termination to identify outlet location at other end.

D. Sleeves: Provide conduit sleeves for installing open signal cables through draft stops and partition walls in attics, crawl spaces, and accessible ceiling spaces. Use specified fire rated sleeves through fire rated construction. Locate and size sleeves per approved shop drawings provided under related sections and as otherwise indicated.

E. Device Plates: It is the electrical contractor's responsibility to ensure that all line voltage and low voltage system faceplates and visible trim pieces are the same style and finish.

END OF SECTION

SECTION 26 05 80 – ELECTRICAL SERVICE

PART 1 GENERAL

1.1 SECTION INCLUDES

A. Electrical Service Requirements

1.2 REGULATORY REQUIREMENTS

A. Contact and coordinate with Puget Sound Energy regarding electrical service requirements, including entrance fittings, meter enclosures and socket arrangement, and current transformer provisions.

B. Obtain, prepare, and file application forms required by the serving utilities for obtaining temporary and permanent services.

C. Do not install any equipment or service entrance rough-in prior to contact, coordination, and obtaining all requirements from the applicable serving utilities.

1.3 UTILITY CHARGES

A. Obtain and pay all utility company charges for installing power, telephone, and cable television service.

PART 2 PRODUCTS

2.1 MATERIALS AND EQUIPMENT

A. Materials and Equipment: Conform to requirements of the Utility companies.

B. Raceway: Schedule 40 PVC below grade; rigid galvanized steel for sweeps, risers, and for conduit above grade.

C. Telephone Terminal: 48" wide x 72" high x 3/4" plywood painted with class A fireproofing, unless otherwise indicated.

D. Pull Rope: 1/4-inch polypropylene.

PART 3 EXECUTION

3.1 INSTALLATION, ELECTRICAL SERVICE

A. Make arrangements with Utility Company to obtain [temporary and] permanent electrical service to the Project. Coordinate and arrange for scheduling of Utility Work.

B. Installation: Comply with Utility Company rules, regulations, and installation requirements.

C. Maintain minimum 7.5 inch on center spacing between underground parallel electrical service conduits. Install conduits for electrical service rate above 600 volts with 36 inches minimum cover.

D. Where utilities share common trench or routing, maintain minimum 12 inch clear separation between power and other utility systems.

E. Provide meter bases, metering conduit, current transformer (CT) enclosure, and service entrance conduit and wire. Leave sufficient service conductor length at

transformers for terminations by Utility.

F. Install current transformers (CT's) furnished by Utility.

G. Provide excavation, trenching, and backfill for utility company transformer vault and primary service duct from property line to transformer location(s). Allow for installation of gas service to share trench with primary service conduit. Provide trench width and depth per Utility requirements. Exact routing of primary service conduits shall be determined by the Utility. Quantity and location of junction and pull vaults shall be determined by the Utility. Obtain written approval from Utility prior to commencing Work.

** (List additional customer service requirements if needed to clarify work by Contractor)

END OF SECTION

SECTION 26 09 20 – LIGHTING CONTROLS

PART 1 GENERAL

1.1 SECTION INCLUDES

A. Manual Controls

B. Occupancy Sensors

C. Time Switches

D. Low Voltage Control Panels

E. Daylight Sensors

F. Room Controllers

G. Emergency Transfer Devices

H. Factory Start Up Requirements

1.2 RELATED SECTIONS

A. Section 25 05 00, Integrated Automation

B. Section 26 50 00, Lighting Fixtures

1.3 SUBMITTALS

A. Submit product data for all products and associated components specified under Part 2 of this section.

B. Submit shop drawings showing control sequence, bill of material, and wiring or schematic diagrams for each type and variance of room lighting control system. Indicate by plan or instruction the best mounting and installation location for each occupancy and daylight sensor. For multi-room and networked control systems include additional shop drawings of floor plans that show location of panels, system components, and interconnecting wiring. Wiring diagrams shall clarify field installed from factory installed wiring.

1.4 OPERATION AND MAINTENANCE DATA

A. Include submittal data, shop drawings, installation and operating instructions, commissioning and test reports, and warranties that exceed one year in Operations and Maintenance Manuals.

PART 2 PRODUCTS

2.1 ACCEPTABLE MANUFACTURERS

A. 0-10 VDCWall Box Dimmers: Lutron Diva series or approved

B. Line Voltage Photocells: General Electric, Intermatic, Tork

C. Occupancy Sensors: Greengate, Sensor Switch, WattStopper

D. Outdoor Occupancy Sensors: Sensor Switch SBOR/ODP series or approved

E. Time Switches: BRK Electronics, Intermatic, Tork

F. Low voltage control panels, sensors and switches: Douglas, Greengate, LC&D,

WattStopper

G. Digital room controllers, sensors, and wall stations: Greengate, LC&D, nLight, WattStopper

2.2 MANUAL CONTROLS

A. Line Voltage Switches: Provide as specified under Section 26 05 00 for wiring devices.

B. Low Voltage Switches: Heavy duty, 3-position, momentary contact, toggle switch, rated 3 amperes at 25 VAC. Two wire, single relay control switches shall include integral diodes for transformer/relay operation as required. Color: Match wiring devices specified under Section 26 05 00.

C. 0-10VDC Wall Box Dimmer: Architectural line voltage on/off switch with low voltage preset linear slide dimming control feature, 120/277 volt, 8 amp minimum switching load capacity, 50 milliamp minimum 0-10VDC sink capacity, UL listed for use with fixture type, driver, and/or dimming ballast provided, single pole or 3-way as indicated, suitable for use with decora style wall plates Color: Match wiring devices specified under Section 26 05 00.

D. Digital Wall Stations: Low voltage, local network, manual switch station with feed thru RJ45 ports, suitable for use with decora style wall plates. Provide On/Off, On/Off/Dim, and/or multi-pushbutton On/Off/Scene/Dim switch stations as indicated. Color: Match wiring devices specified under Section 26 05 00.

E. Switch Plates: Match material and finish of device plates specified in Section 26 05 00.

2.3 OCCUPANCY SENSORS

A. Room Sensors:

1. Dual technology (ultrasonic/passive infrared) 24VDC occupancy detector, adjustable sensitivity and time delay, manual override, LED motion indicator, compatible with fluorescent electronic ballasts. Rated area coverage shall conform to manufacturer's recommendation for complete room coverage without gaps, using single or multiple sensors as required. Sensors may be wall or ceiling mounted type. Exception: In restrooms and toilets with privacy partitions or showers, provide ultrasonic type without passive infrared feature.

2. Provide low temperature sensors (-4 degree F/-20 degree C) where installed in unheated spaces and in refrigerated spaces. Provide high humidity sensors where installed in damp locations, refrigerated spaces, and adjacent to shower stalls.

3. Wire Guard: Provide in public restrooms, gymnasiums, locker rooms, and similar areas where sensor may be subject to abuse.

B. Transformer/Relay Pack: 120/277 volt control interface providing NEC class 2 input/output to occupancy sensor(s) and automatic line voltage switch control. Relay contacts shall be isolated, normally open, rated 20 amperes for ballast loads and 1 HP. Provide auxiliary isolated dry contact set to allow for air temperature control (ATC) interface with the occupancy sensor control system; a slave relay may be provided for this purpose.

C. Wall Switch Sensors:

1. Passive infrared occupancy sensor, automatic OFF, manual ON/OFF, continuous self adapting sensitivity and time delay, LED motion indicator, compatible with magnetic ballast, electronic ballast, and motor loads, 170 degree minimum field of view. Minimum load rating shall be 600 VA and 1/6 HP at 120 volts and 1000 VA and 1/3 HP at 277 volts. Minimum rated area coverage shall be 900 square feet.
2. Provide low temperature sensors (-4 degree F/-20 degree C) where installed outdoors, in unheated spaces, and in refrigerated spaces. Provide high humidity sensors where installed in damp locations, refrigerated spaces, and adjacent to shower stalls.
3. Two Level Switching: Where indicated, provide wall switch sensor with independent dual switching control, user selectable for control of one or two switch legs to provide two levels of room illumination.
4. Finish: Match wiring devices and plates specified under Section 26 05 00.

D. Outdoor Sensors: Digital passive infrared (PIR) occupancy sensor, outdoor rated (water tight, -41 to +160 degree F), 360 degree coverage, line voltage On/Off control, 0-10VDC output for dimming, integrated photo sensor, suitable for control of fluorescent, HID, and LED light fixtures, suitable for low and high mounting up to 30 feet above grade, with chase nipple for mounting to outlet box, light fixture, or pole, housing color as selected.

2.4 TIME SWITCHES

A. 24 Hour Electronic Time Switch: 24 hour programmable, 8 on/off events per day minimum, field replaceable battery back-up, 30 amp rated double pole single throw (DPST) contacts.

B. 7-Day Electronic Time Switch: Two (2) circuit, 7-day programmable, 8 on/off events per day minimum, field replaceable battery back-up, 30 amp rated contacts.

C. Mechanical Time Switch: Commercial grade spring wound wall box timer, 60 min, 6 hours or 12 hours as indicated, normally open single pole single throw (SPST) contact, time indicating device plate. Provide with NEMA 3R, clear, UV stabilized, polycarbonate device cover where weatherproof is indicated.

D. 24 Hour Mechanical Time Switch: Synchronous motor driven wall box time switch, 24 hour dial with skip a day feature, spring driven power reserve with automatic rewind, 40 ampere rated 3 pole single throw (3PST) contacts.

E. 7-Day Mechanical Time Switch: Synchronous motor driven time switch, 7-day calendar dial, spring driven power reserve with automatic rewind, 40 ampere 3 pole single throw (3PST) contacts.

2.5 LOW VOLTAGE RELAY CONTROL PANELS

A. Transformers: ANSI/NFPA 70; Class 2 energy limited, 120/277:15-24 volt, sized for load.

B. Low Voltage Relays: Mechanical or magnetic latching remote control relays rated 20 amperes at 120/277 volts and suitable for HID lighting. Shall have isolated pilot contacts where required.

C. Master Controllers: Solid state device allowing group control of more than 3 relays by a momentary and/or maintained contact input from manual switch, photo controller, or time controller. Installed configuration shall have 20% minimum spare relay capacity. Separate modules may be used for momentary and maintained contact switch control. Include programmable enable/disable of any relay function, and flick warn option with off sweep 2 hour override enabled from local or master switch control during 5 minute warning period. Provide with RS485 networking between controls panels within a building. Provide RS232 port and ethernet interface module and associated software for local and remote PC programming, control, and troubleshooting. Provide modem for offsite factory trouble shooting and programming over a standard telephone connection when this support service available from the system manufacturer.

D. Photo/Time Controllers: Programmable solid state 365 day astronomic time/photo controller, membrane key pad entry with LCD graphic display, 8 time/photo control programmable outputs, remote photo sensor input, indefinite program and 72 hour minimum time backup on power loss, 600 events per week with week day and holiday scheduling. Any output can be time, astronomic, photo or combination controlled.

E. Photo Controllers: Solid state device for operating relays and/or auxiliary contacts to control remote master controllers using a remote low voltage photo sensor. An override input shall allow a remote switch or time clock to enable or disable the photo control function.

F. Relay Control Cabinets: NEMA ICS6 Type 1; shop fabricated and wired sheet metal box with screw on flush cover, side hinged flush locking door, and painted enamel finish. Assembly shall include labeled terminal blocks, line voltage - low voltage separation barriers, mounting provisions for 20% or more additional relay and associated transformer capacity, and removable circuit index card inside protective pocket on inside of front cover. Key all relay cabinets alike. Furnish two keys. Cabinets shall be flush mounted where indicated.

G. Flush Switch Cabinets: NEMA ICS6 Type 1; shop fabricated sheet metal box with screw on flush cover, side hinged flush locking door, and painted enamel finish. Keys shall match relay cabinets. Size cabinets to accommodate switch layouts indicated.

H. Remote Time Controllers: Programmable solid state 365 day, 600 events per week with week day and holiday scheduling, provided under Section 25 05 00, Integrated Automation. Provide master controller that accepts both remote momentary and maintained timed inputs. Allow for 8 time control groups minimum.

2.6 DAYLIGHT SENSORS

A. Indoor Digital Daylight Sensors: Multi-zone photo sensor with RJ45 network connection, infrared (IR) transceiver for calibration using a handheld remote programmer, and suitable for semi-flush ceiling mount or for surface mounting in skylight wells. Sensor measures room daylight contribution and communicates with a compatible room controller to automatically dim or switch up to three separate zones of lighting, raising and lowering light fixture illumination in response to available daylight.

B. Low Voltage Photo Sensors, Outdoors: Weather proof, water tight sensor head

suitable for outdoor mounting to an outlet box, auto ranging 1 to 10,000 FC, + or - 5%, compatible with control panel controller for off-day/on-night operation of outdoor light fixtures.

C. Line Voltage Photocell: Weatherproof, off-day/on-night, 2000 watt tungsten rated, SPST with time delay, adjustable 2-50 footcandles.

D. Line Voltage Photocell, Flush Mounted: Weatherproof, off-day/on-night, button type, thermal relay, 1000 watt, SPST, with stainless steel cover plate and gasket.

2.7 DIGITAL ROOM CONTROLLERS

A. General: UL listed low voltage network lighting and power controller, 120/277 volt, 20 ampere rated, three (3) on/off relay outputs, four (4) minimum RJ45 digital input/outputs.

B. Dimming: Where manual and/or automatic daylight control is indicated, provide three (3) 0-10Volt DC Class 2 dimming control outputs. Controls shall be configured to completely shut off all controlled lights in the control zone.

C. On/Off Receptacle Load Control: Where automatic switch control of receptacles is indicated, provide a UL listed low voltage network 20 ampere plug load rated standalone controller.

D. Sensors, Devices, and Accessories: Provide compatible sensors, wall stations, interface device, and cabling for a complete control system.

E. Emergency Lighting: Controllers with dimming control shall be programmed or otherwise designed to ensure 100% full light output of controlled dimmable emergency lights upon loss of normal power.

F. Provide hand held wireless configuration device for remote programing of system sensor, control, and dimming functions. Furnish two hand held devices.

G. Provide required software and PC USB interface device for programming and managing the digital lighting control system using a personal computer.

2.8 EMERGENCY TRANSFER DEVICES

A. Integral with Light Fixture: Emergency transfer devices installed in light fixtures are specified under Section 26 50 00, Light Fixtures.

B. Remote Emergency Lighting Transfer Relay: UL 924, 120/277 volt, 20 amp rated, integral test switch, LED power status indication, fail safe emergency power ON upon loss of normal power.

C. Integral with Digital Room Controller: UL 924, 120/277 Volt, 3 amps minimum; provide emergency relay and control to automatically power ON designated emergency light fixture(s) at full brightness upon loss of normal power.

2.9 MATERIALS

A. Low Voltage Wire: UL Type CL2P, NEC class 2P or better, with teflon jacket overall and listed for use in ducts, plenums, and other air handling spaces; multi-conductor, stranded copper cable, #20 AWG minimum, color coded.

B. RS 485 Communications and Digital Control: UL type CMP, Category 5 extended frequency (350MHz), 24 AWG solid copper, 4-pair unshielded twisted pair, jacket overall, color coded, listed for use in ducts, plenums, and other air handling spaces. Cable installed below grade shall have a water blocking core

and be suitable for wet locations in conduit.

C. Conduit and Outlet Boxes: As specified under Section 26 05 00.

D. Cable Supports: Molded nylon clamps, heavy duty nylon ties, or galvanized steel bridle rings; sized to match cables supported. Tyton, Brady, Burndy, or Thomas & Betts manufacture.

PART 3 EXECUTION

3.1 INSTALLATION

A. Install lighting controls in accordance with manufacturer's instructions and approved shop drawings. Provide programming, setup, and calibration for complete operation of each control system.

B. Install low voltage wiring in conduit except cable may be installed without conduit above accessible ceilings. Install open cable parallel and perpendicular to building lines; support cable from structure at intervals not to exceed 4.5 feet on center. Do not splice open cable.

3.2 OCCUPANCY SENSORS

A. Room Sensors: Provide number and location required for complete coverage within room (including toilet and shower stalls) and to minimize false activation thru open doors as recommended by manufacturer. Ceiling mounted sensors shall not be used above 12 feet. Provide additional transformer/relays or room controllers as required where multiple branch circuits are controlled.

B. On/Off Operation: Wall switches and occupancy sensors shall be wired or otherwise programmed to provide manual on, manual off, and automatic sensor off control of room lighting unless otherwise indicated.

C. Time Delay: Set manual time delay for automatic off at 15 minutes unless otherwise directed or indicated.

3.3 TIME CONTROLS

A. Provide initial and final programming and testing, scheduled at the convenience of the Owner. Arrange for an Owner representative to be present for each programming session. Coordinate time schedules and programming with Division 25 Contractor. Start up control sequence shall be as scheduled on drawings. Final control sequence shall be as directed by Owner.

3.4 LOW VOLTAGE CONTROL PANELS

A. Provide typewritten circuit index in each relay cabinet identifying relay numbers, line voltage, circuit numbers, loads controlled, and master/local/special sensor switch control information.

B. Arrange with Owner's voice/data system installer to provide one phone line and one data line terminated with required jacks for modem and ethernet connections.

3.5 DAYLIGHT SENSORS

A. Locate daylight sensors per plan and/or instructions shown on approved shop drawing.

B. Provide calibration of daylight sensing controls after substantial completion. Calibrate indoor daylight sensors to lower fixture illumination when daylight zone ambient illumination is above 80FC unless otherwise indicated.

3.6 DIGITAL ROOM CONTROLLERS

A. Areas with Accessible Ceiling Space: Locate controller above ceiling within 6 feet of first lighting outlet serving lights to be controlled unless otherwise indicated. Low voltage wiring between sensor and relay may be installed without conduit.

B. Coordinate with Division 25 contractor to identify auxiliary relay contacts provided for air temperature control (ATC) interface.

3.7 FACTORY STARTUP

A. General: Field start-up, testing, and adjustment for low voltage control panels and for digital room control systems shall be performed under the supervision of a factory trained manufacturer's representative.

3.8 DEMONSTRATION AND INSTRUCTIONS

A. Demonstrate operation and maintenance of system to Owner's personnel prior to contract closeout. Allow one site visit of total instruction scheduled at convenience of Owner.

B. Use operation and maintenance manuals as basis of instruction, reviewing contents of manual with personnel in detail.

C. Follow-Up Training: Include a second site visit for training and programming adjustments between 6 months to one year of substantial completion scheduled at convenience of Owner.

END OF SECTION

SECTION 26 20 00 – ELECTRICAL DISTRIBUTION

PART 1 GENERAL

1.1 SECTION INCLUDES

A. Panelboards and Circuit Breakers

B. Disconnect Switches

C. Fuses

D. Motor Controllers

E. Contactors

F. Enclosed Circuit Breakers

G. Nameplates

1.2 RELATED SECTIONS

A. Concrete for Equipment Pads: Comply with Division 03 - Concrete.

1.3 SUBMITTALS

A. Submit product data for panelboards, circuit breakers, motor controllers, contactors, and enclosed circuit breakers.

B. Submit shop drawings for panelboards.

C. Coordinate dimensions of equipment with site and project space dimensions to verify equipment will fit, conform to indicated layout, and meet NEC and manufacturer clearance requirements.

D. Submit reports for tests required under Part 3 of this section. Submit manufacturer's performance testing instructions and signed written performance test records for equipment ground fault protection systems.

1.4 OPERATION AND MAINTENANCE DATA

A. Include data for panelboards, circuit breakers, motor controllers, fuses, contactors, studies, and tests in Operation & Maintenance Manuals.

1.5 SPARE PARTS

A. Fuses: Furnish to Owner 3 spare fuses of each type and rating installed.

B. Fuse Pullers: Furnish 2 fuse pullers to the Owner.

PART 2 PRODUCTS

2.1 ACCEPTABLE MANUFACTURERS

A. Panelboards, Circuit Breakers and Disconnects: Square 'D', Siemens, Cutler-Hammer.

B. Motor Controllers and Contactors: Allen-Bradley, Square 'D', General Electric, Furnas, Cutler-Hammer.

C. Fuses: Bussman and Littelfuse.

2.2 POWER DISTRIBUTION PANELBOARDS

A. Panelboards: UL 67, NEMA PB 1; fusible switch type, circuit breaker type with provisions for 225 amp frame branch breakers, suitable for use as service equipment.

B. Electrical Ratings, Switch Arrangement, Special Features: As indicated on drawings. Indicated ampere interrupting capacity (AIC) is the full rms symmetrical integrated equipment short circuit rating of bussing and of overcurrent devices without series rating.

C. Cabinet: ICS 6; Type 1 for dry locations, Type 3R for damp or outdoor locations; surface mounted. Coordinate maximum dimensions with room layout shown on plans.

D. Finish: Manufacturer's standard enamel over rust inhibitor.

E. Circuit Directory: Index card under plastic with metal frame holder on each branch switch.

F. Main Overcurrent Protective Device(s): UL 489; molded case circuit breaker with thermal magnetic trip fixed mounted, single handle common pole operation, AIC rating greater than available symmetrical short circuit amperes. Circuit breakers rated 1000 amps or larger for solidly grounded wye electrical systems rated more than 150 volts to ground shall have ground fault protection. Circuit breakers rated or otherwise adjustable to 1200 amperes and larger shall have an arc energy reducing maintenance switch with electronic trip and status indication to reduce clearing time.

G. Circuit Breakers: UL 489; molded case, thermal magnetic trip, AIC rating greater than available symmetrical short circuit amperes. Multi-pole breakers shall be single handle with common pole operation. Feeder circuit breakers required to selectively coordinate shall have LI or LSI solid state trip. Circuit breakers rated 1000 amps and larger shall have LSI solid state trip.

H. Bussing: Copper with full neutral and ground bus.

I. Future Provisions: Provide fully equipped spaces for future devices with bussing, device supports, and bus connections.

J. Where surge protective device (SPD) is indicated, coordinate requirements with Section 26 43 00.

2.3 BRANCH CIRCUIT PANELBOARDS

A. Panelboards: UL 67, NEMA PB 1; bolt-on circuit breaker type.

B. Electrical Ratings, Circuit Breaker Arrangement, Special Features: As indicated on drawings. Indicated ampere interrupting capacity (AIC) is the rms symmetrical integrated equipment short circuit rating of the complete assembly. Indicated AIC rating shall be base upon manufacture listed series rating with the panelboard main device or the line side overcurrent protective device, as applicable, unless otherwise indicated.

C. Cabinet: Concealed trim clamps, concealed hinge door-in-door (one door over interior and one which exposes gutter) with flush locks all keyed alike, 6" deep x 20" wide. Provide two keys for each panelboard furnished.

D. Finish: Manufacturer's standard enamel over rust inhibitor for exposed surfaces; galvanized steel for recessed boxes.

E. Circuit Directory: Index card under plastic with metal framed holder on inside door.

F. Main Overcurrent Protective Device(s): UL 489; molded case circuit breaker with thermal magnetic trip fixed mounted, single handle common pole operation, AIC rating greater than available symmetrical short circuit amperes. Main circuit breakers required to selectively coordinate shall have LI or LSI solid state trip.

G. Circuit Breakers: UL 489; molded case, thermal magnetic trip. Multi-pole breakers shall be single handle with common pole operation.

1. Provide type SWD circuit breakers for lighting circuits.
2. Provide type HACR circuit breakers for air conditioning equipment, refrigeration equipment, and surge protection devices (SPD).
3. Provide approved manufacturer handle ties between single pole circuit breakers serving branch circuits sharing a common neutral (disconnecting means for multiwire branch circuits).
4. Provide approved manufacturer handle padlock attachment on circuit breakers serving branch circuits for permanently connected appliances without local disconnecting means and where otherwise indicated.
5. Provide combination-type arc-fault circuit interrupter protection (AFCI) circuit breakers for branch circuits where indicated.
6. Provide ground fault circuit interrupter protection (GFCI) circuit breakers for branch circuits where indicated.
7. Provide ground fault equipment protection (GFEP) circuit breakers for pipe heat trace and for deicing and snow melting equipment.
8. Circuit breakers used as mains (back-fed) shall be suitable for the purpose and shall include an auxiliary fastener listed and approved by the panelboard manufacturer where plug-in type device is used.

H. Bussing: Copper with full neutral and ground bus. Provide separate ground bus isolated from cabinet where isolated grounding requirements are indicated.

I. Where surge protective device (SPD) is indicated, coordinate requirements with Section 26 43 00.

J. Where fusing is required to comply with selective coordination requirements of NEC 700 and 701, provide lighting and appliance panelboard that includes UL listed, special purpose, low peak branch circuit fuses with Class J performance in series with each branch circuit breaker or disconnect. Fuses shall be IP20 finger-safe with neon open fuse indication, single and multi-pole as scheduled. Cooper Bussmann QSCP, Eaton PRL1aF or 2aF, or approved.

K. Provide flush mounted panelboards with bullnose trim where full recessed depth is not available.

L. Provide sheet metal skirt with matching panelboard finish from bottom of surface mounted panelboards to floor.

2.4 ENCLOSED CIRCUIT BREAKERS

A. Circuit Breakers: UL 489; molded case circuit breaker with thermal magnetic trip fixed mounted, single handle common pole operation, AIC rating greater than

available symmetrical short circuit amperes. Circuit breakers rated 1000 amps or larger for solidly grounded wye electrical systems rated more than 150 volts to ground shall have ground fault protection. Circuit breakers rated or otherwise adjustable to 1200 amperes and larger shall have an arc energy reducing maintenance switch with electronic trip and status indication to reduce clearing time.

B. Electrical Ratings, Configuration, and Special Features: As shown on drawings. The indicated ampere interrupting capacity (AIC) shown on the drawings is the full rms symmetrical equipment short circuit rating of bussing and of all overcurrent devices installed.

C. Enclosures: NEMA ICS6; Type 1 for dry locations, Type 3R for damp or outdoor, with pad locking provisions, and suitable for use as service equipment. Include neutral and/or ground kits as required.

2.5 DISCONNECT SWITCHES

A. Safety Switches: NEMA KS 1; heavy duty, quick make, quick break, handle with lock out/tag out provisions. Provide rating, number of poles, and fusing required for load served.

B. Safety Switches for Variable Frequency Drives (VFD): Safety switches installed on the load side of VFD controllers shall include an interlock to disable controller operation when the safety switch handle is operated to the open positon.

C. Toggle Switches for Small Motors and Appliances: NEMA WD 1; horsepower rated 20 ampere general use snap switch with lock-out attachment.

D. Switch Enclosures: NEMA ICS 6; Type 1 for dry locations, Type 3R for damp or outdoor locations.

2.6 FUSES

A. Approved Fuses, 600 Amperes and Less, for Branch Circuits and Power Distribution:

1. ANSI/UL 198C Class J low peak with time delay unless otherwise indicated except ANSI/UL 198E Class RK5 may be used in safety switches for protection of motors and transformers.

2. For protection of circuit breakers: Fuses must comply with NEC 240.86 series rating requirements for load side circuit breakers that are not rated for the available fault current. Coordinate series rating requirements with published manufacturer's listings for circuit breakers installed.

B. Approved Fuses, Over 600 Amperes, for Branch Circuits and Power Distribution:

1. ANSI/UL 198C Class L low peak with time delay unless otherwise indicated.

2. For protection of circuit breakers: Fuses must comply with NEC 240.86 series rating requirements for load side circuit breakers that are not rated for the available fault current. Coordinate series rating requirements with published manufacturer's listings for circuit breakers installed.

2.7 MOTOR CONTROLLERS

A. Manual Motor Starters: NEMA ICS 2; AC general purpose Class A manually operated full-voltage controller for fractional horsepower induction motors, with

thermal overload unit, green neon pilot light, and toggle operator.

B. Magnetic Motor Starters: NEMA ICS 2; full voltage non- reversing (FVNR) type, hand reset solid state overload relay with phase loss protection, green 20,000 hour "ON" pilot light, one normally open and one normally closed auxiliary contacts, fused 120 volt control transformer, 120 volt operating coil; additional features as indicated. Provide cover mounted "Hand-Off-Auto" selector switch unless operator station is indicated.

C Two Speed Motor Starters: Provide consequent pole or separate winding starter to match requirements of motor provided. Verify motor type prior to ordering. Provide pilot lights for each speed. Other features and starter options shall comply with requirements for magnetic motor starters specified above.

D. Overload Relay: Installed relay shall have an adjustable current range up to 140% of NEC rated motor full load amperes.

E. Combination Motor Starters: Combine Magnetic Motor Starter and fused disconnect switch with Class R fuse provisions in common enclosure.

F. Fire Alarm Shutdown: Provide magnetic starters with auxiliary control relay for fire alarm shutdown interface where indicated.

G. Operator Stations: NEMA ICS 2; heavy duty oil tight, operator and legend plate indicated.

H. Enclosures: NEMA ICS 6; Type 1 for dry locations, Type 3R for damp or outdoor locations.

I. Enclosure Finishes: Manufacturer's standard enamel over rust inhibitor on all interior and exterior surfaces.

2.8 CONTACTORS

A. Lighting Contactors: NEMA ICS 2; electrically held, 100% continuous rating for tungsten and ballast lighting and resistance loads, 120 volt control coil, fused control circuit. Contact rating and number of poles as indicated on drawings. 20 ampere contacts shall be convertible type.

B. General Purpose Contactors: NEMA ICS 2; electrically held, 100% continuous rating for lighting, resistance, and motor loads, 120 volt control coil fused control circuit. Contact rating and number of poles as indicated on drawings.

C. Emergency Stop Station (Kill Switch): NEMA ICS 2; red 50mm mushroom head pushbutton, push- pull maintained operation with normally closed contact rated 10 amps at 300 volts (minimum) and yellow device plate, flush mounted. Furnish with EMERGENCY STOP labeling engraved on mushroom head or device plate. Square D, Siemens, Cutler-Hammer, or approved.

D. Remote Operator Station: NEMA ICS 2; key operated two or three position momentary selector switch with contacts rated 10 amps at 300 volts (minimum), flush mounted in finished spaces. Furnish with legend plate or engraving on device plate to indicate function(s). Provide as key operated station where indicated. Square D, Siemens, Cutler-Hammer, or approved.

E. Enclosures: NEMA ICS 6; Type 1 for dry locations, Type 3R for damp or outdoor locations.

2.9 NAMEPLATES AND LABELS

A. Nameplates: Engraved three-layer laminated plastic, white letters on black background, affixed with stainless steel screws, adhesive acceptable in dry locations. Use black letters on yellow background for series combination rating identification.

B. Letter Height: 1/2-inch for series combination rating identification. 1/4-inch for switchboards, panelboards, motor control centers, circuit breakers, switches, and disconnecting means; 1/8-inch for motor starters, contactors, time switches, and equipment served.

C. Arc Flash Hazard Warning at Service Equipment Rated 1200 Amps and Larger: ANSI Z535.4; Self adhesive vinyl label factory installed by the equipment manufacturer to read WARNING, Electrical Arc Flash Hazard, Appropriate PPE Required, and informational text to indicate system voltage, available fault current at the service overcurrent protective devices, clearing time of service overcurrent protective devices based on the available fault current, and date the label was applied.

D. Arc Flash Protection Labels: ANSI Z535.4; Self adhesive vinyl label factory installed by the equipment manufacturer with ANSI header to read WARNING or DANGER and informational text to include:

Electric Arc Flash Hazard
Turn off all power before opening
Follow all requirements in NFPA 70E for safe work practices and for Personal Protective Equipment.
Failure to comply can result in death or injury

E. Arc Flash Protection Labels for Switchgear, Panelboards, and Motor Control Centers: ANSI Z535.4, NFPA 70E; Self adhesive vinyl labels consisting of arc flash information based on the approved hazard study. Labels shall include Flash Category, Arc Flash Rating (cal/cm2), Hazard Boundary, and required Personal Protective Equipment (PPE).

PART 3 EXECUTION

3.1 PANELBOARDS

A. Install in accordance with NEMA PB 1.1.

B. Height: 78 inches maximum measured from finish floor to top of enclosure; 78 inches maximum measured from finish floor to highest device handle for panelboards over 66 inches high.

C. Provide typewritten circuit directory for each panelboard listing load description for each circuit. Use final room names and numbers as verified with the Owner.

D. Stub 5 empty 3/4-inch conduits to accessible location above ceiling from each recessed panelboard.

E. Fire Rated Construction: Recessed rough-in cans that penetrate fire rated wall assemblies shall comply with requirements of Section 26 05 00. Verify location of fire rated assemblies with Architectural plans prior to rough in.

3.2 FUSES

A. Install fuses in fusible switches.

B. Size fuses for motor loads at 150% of nameplate full load amperes; size fuses for air conditioning and refrigeration equipment at maximum recommended nameplate rating.

3.3 CIRCUIT BREAKERS

A. Install circuit breakers in accordance with manufacturer instructions and recommendations.

B. Set adjustable breakers to comply with the approved protective device coordination study or as directed by the Engineer.

3.4 MOTOR CONTROLLERS

A. Adjust solid state overload relay to match installed motor characteristics and ambient conditions. Initial setting shall not exceed 125% of nameplate full load amps.

3.5 NAMEPLATES AND LABELS

A. Panelboards: Provide nameplate to identify equipment designation, voltage, and source of supply for each, e.g. Panel A, 208/120V, Fed from Panel M. Provide arc flash protection label. Provide series combination rating nameplate where such rating is applicable.

B. Individual Circuit Breakers, Switches, and Motor Starters Installed in Switchboards, Distribution Panelboards Without Circuit Index: Provide nameplate to identify circuit number and load served.

C. Motor Starters and Contactors: Provide nameplate to identify load served. May be deleted when load is immediately adjacent and obvious as determined by Architect/Engineer. Provide arc flash protection label.

D. Individual Enclosed Circuit Breakers, Safety Switches, and Disconnecting Means: Provide nameplate to identify load served and circuit source and circuit number.

E. Equipment Served: Provide nameplate to identify equipment designation corresponding with nameplate of serving overcurrent device, disconnect switch, or controller when there is more than one of same type of equipment being served, e.g. Air Handler No. 2. Coordinate with Architect/Engineer to assign numbers when not designated in equipment schedules.

F. Emergency-Stop Pushbutton: Engraved three-layer laminated plastic, white letters on red background, affixed with stainless steel screws, adhesive acceptable in dry locations. Letter height 1/2-inch to read: "EMERGENCY POWER OFF".

G. Nameplate and Label Location: Secure to equipment fronts, except recessed panelboards in finished locations secure nameplates and labels to inside face of door.

H. Service Equipment: Provide label identifying short circuit rating indicated along with date of construction documents.

3.6 TESTS

A. Motors and Compressors: Record all nameplate data. Measure actual voltage and running amperes for each phase. Record manufacturer and catalog number of overload thermal units installed.

B. Equipment Ground Fault Protection Systems: Test prior to being placed into service to verify proper installation and operation of the system as determined by the equipment manufacturer's published instructions. Set pick up for 300 amps and time delay for zero (instantaneous) unless otherwise indicated or directed. Record test results.

END OF SECTION

SECTION 26 33 23 – EMERGENCY CENTRAL BATTERY SYSTEM

PART 1 GENERAL

1.1 SECTION INCLUDES

A. Continuous-duty, fast transfer, solid state, central battery system for emergency lighting. System shall consist of LCD control panel, software, rectifier/charger, inverter, static bypass transfer switch, batteries, and accessories.

B. Factory Startup and Training

1.2 RELATED SECTIONS

A. Section 26 50 00, Light Fixtures

1.3 REGULATORY REQUIREMENTS

A. UL 924 – Emergency Lighting and Power Equipment.

1.4 SUBMITTALS

A. Product Data: Provide catalog sheets and technical data sheets to indicate physical data and electrical performance, electrical characteristics, connection requirements and furnished accessories.

B. Shop Drawings: Indicate electrical characteristics and connection requirements. Provide battery rack dimensions; battery type, size, dimensions, and weight; detailed equipment outlines, weight, and dimensions; location of conduit entry and exit; single-line diagram indicating metering, control and external wiring requirements; heat rejection and air flow requirements. Include installation requirements for anchoring and bracing.

C. Manufacturer's Installation Instructions: Indicate application conditions and limitations of use stipulated by Product Testing Agency. Include instructions for storage, handling, protection, examination, preparation, installation, and starting of product. Include equipment installation outline, connection diagram for external cabling, internal wiring diagram, and written instructions for installation.

D. Coordinate dimensions of equipment with site and project space dimensions to verify equipment will fit, conform to indicated layout, and meet NEC and manufacturer clearance requirements.

1.5 OPERATION AND MAINTENANCE DATA

A. Provide operation, maintenance and installation manual. Include all approved submittal data. Where manual and associated data reference more than one model, product, size, voltage, optional feature, and/or accessory, highlight or otherwise indicate which were actually furnished and installed under the project.

1.6 QUALIFICATIONS

A. Manufacturer: Company specializing in manufacturing the products specified in this section with minimum three years experience, and with service facilities within 150 miles of Project.

1.7 WARRANTY

A. Minimum UPS warranty shall be 1 year, parts, labor, and travel to begin upon completion of factory startup.

B. Battery warranty shall be 10 years prorated to begin upon completion of factory startup.

PART 2 PRODUCTS

2.1 MANUFACTURERS

A. Myers Power Products, Illuminator Series CIII

B. Controlled Power Products, EON EL3 Series

C. Cooper Sure-Lites, Lifeway II 3 Phase Series

2.2 CENTRAL BATTERY SYSTEM

A. System Configuration: Standby, continuous-duty, 3-phase, fast transfer, central battery system for emergency lighting applications using any combination of fluorescent, incandescent, HID and/or LED lamps, magnetic ballasts, electronic ballasts, and electronic drivers.

B. Listing: UL 924.

C. Components:

1. Batteries.
2. Rectifier/charger to maintain battery charge and to provide DC input to the inverter when utility power is available.
3. Inverter to convert DC from rectifier/charger or from the batteries to AC in order to power to UPS load.
4. Static transfer switch for automatic bypass transfer upon UPS malfunction.
5. Integral manual switch to bypass rectifier/charger, inverter, and static switch for maintenance.
6. Single main input circuit breaker.
7. Single main output circuit breaker.
8. Monitors, sensors, and control circuits.

2.3 SYSTEM RATINGS AND OPERATING CHARACTERISTICS

A. System Continuous Rating: 1.5 KVA / 1.5 KW, over entire battery voltage range at specified power factor. Maintain output voltage within specified limits at any load from full load to no load.

B. Battery Capacity: 90 minutes minimum at full load.

C. Voltage rating: 120 volts 1-phase, 2-wire input; 120 volts, 1-phase, 1-wire output.

D. Input Voltage Operating Range: Plus or minus 10 percent.

E. Input Frequency Operating Range: 60 Hz plus or minus 3 Hz.

F. System Efficiency: 0.94 or better.

2.4 DESIGN

A. Inverter Type: Standby, IGBT, pulse-width modulated, faster transfer (less than 2 milliseconds). On-line double conversion type is also approved.

B. Charger Capacity: Sufficient to recharge fully-discharged battery to full capacity within 24 hours per UL 924 requirements.

C. Provide means for on-line testing of UPS, including test points to allow adjusting and servicing. Provide means for testing static switch while load is by-passed to utility.

D. Input and Output Circuit Breakers: NEMA AB1; molded case circuit breaker with thermal magnetic trip fixed mounted, single handle common pole operation, AIC rating greater than available symmetrical short circuit amperes.

2.5 CONTROL

A. Display: Front mounted LCD panel and operator station for system monitoring, control and diagnostics. Provide audible and/or visual displays for system status, alarm conditions, and power metering.

B. Provide system self-diagnostics.

C. Provide automatic self-testing per NFPA and UL requirements.

2.6 ENCLOSURE

A. NEMA1, IP20; Free standing ventilated enclosure(s), front accessible with locking hinged door access, and standard manufacturer finish. UPS and batteries may be housed in a common enclosure. All enclosures shall have matching style, appearance, and finish.

2.7 BATTERY SYSTEM

A. Storage Battery: Sealed valve regulated lead acid (VRLA) maintenance free heavy duty industrial battery.

B. Amp-Hour Rating: Sufficient to supply direct current to inverter for outage period specified with inverter operating at full rated output.

C. Disconnect: Provide battery cabinet(s) with circuit breaker or other approved disconnecting means.

2.8 CONTROLS, INDICATORS AND ACCESSORIES

A. Communications: Provide RS232 port. Include Ethernet Web/SNMP network card when this option is available.

B. Software: Provide software for power management and for network monitoring.

C. Seismic Restraint: Provide seismic restraint hardware for system cabinet(s) meeting requirements for IBC design category D-2 or better.

PART 3 EXECUTION

3.1 UPS INSTALLATION

A. Install in accordance with manufacturer's instructions.

B. Provide all field wiring and interface cabling between cabinets for complete system installation per approved shop drawings and manufacturer installation instructions.

3.2 FIELD QUALITY CONTROL

A. Verify specification performance criteria; measure battery discharge and recharge times; simulate fault in each system component and utility power.

3.3 MANUFACTURER FIELD SERVICES

A. Provide field start-up, testing, and adjustment under the supervision of a factory trained manufacturer's representative. Include programming for automatic system testing as directed by Owner.

3.4 DEMONSTRATION

A. Demonstrate operation of central battery system by simulating an outage. Perform in conjunction with testing of standby generator and in presence of Owner.

B. Provide 2 hours of instruction to be conducted at project site and scheduled at the convenience of the Owner.

END OF SECTION

SECTION 26 43 00 – AC SURGE SUPPRESSION BELOW 600 VOLTS

PART 1 GENERAL

1.1 SECTION INCLUDES

A. Surge Protective Devices (SPD's) for electrical distribution equipment.

1.2 SUBMITTALS

A. Submit product data for all items specified under Part 2 of this Section. Include product installation requirements. Include test data demonstrating compliance with specified performance and peak surge withstand ratings.

1.3 OPERATION AND MAINTENANCE DATA

A. Include data for each device type in Operation and Maintenance Manuals.

PART 2 PRODUCTS

2.1 ACCEPTABLE MANUFACTURERS

A. Integral SPD: Distribution equipment manufacturer's standard products that meet or exceed the minimum requirements of this specification.

B. Remote SPD: Standard products of the following manufacturers that meet or exceed the minimum requirements of this specification: Innovative Technologies, Joslyn TPS series, Eaton SPD series.

2.2 SPD PRODUCT DESIGN

A. General: UL 1449, 3rd Edition, Type 2 Devices; MOV hybrid circuit design with EMI/RFI noise rejection filter. For wye configured systems provide line to neutral (L-N), line to ground (L-G), and neutral to ground (N-G) suppression. For delta configured systems provide line to line (L-L) and line to ground suppression. Designs incorporating replaceable modules are not approved.

B. Diagnostics: LED circuit status indication for each phase. Provide the following additional diagnostics at distribution panels.

C. Enclosure (Remote Devices): NEMA ICS 6; Type 12 or type 4X, unless otherwise indicated. Provide flush trim plate for recess mounting at flush mounted panelboards.

D. Overcurrent Protection: Comply with UL 1449 standard. Coordinate requirements with distribution equipment supplier. Size protection based on wire size of the SPD conductor leads using RK5 fusing or high inrush rated circuit breaker.

E. Disconnecting Means: Provide a disconnecting means for each switchboard and panelboard SPD regardless of whether it is integral or remote mounted. Coordinate requirements with distribution equipment supplier.

F. Product Warranty: 10 year minimum.

2.3 SPD ELECTRICAL REQUIREMENTS (MINIMUM)

A. Voltage Rating: Conform to nameplate of distribution equipment.

B. Ampere Interrupting Capacity (AIC) Rating: Meet or exceed rating of highest rated overcurrent device in the distribution equipment.

C. UL 1449 3rd Edition Voltage Protection Rating (VPR):

System Volts	L-N (Normal Mode)	N-G (Common Mode)	L-L
120 to Ground	700 volts	700 volts	700 Volts

D. UL 1449 VPR Voltage Let Through:

System Volts	L-N	L-G	L-L	N-G
208/120 Wye	700	700	1000	700

E. Peak Surge Withstand Rating per Phase (8 x 20 microsecond impulse wave form):

Service Entrance	160,000 Amps
Distribution Switchboards and Panels	65,000 Amps
Branch Circuit Panelboards	40,000 Amps

F. Noise Attenuation: 55 dB minimum at 100 kHz using MIL-STD-220A insertion loss test method.

PART 3 EXECUTION

3.1 INSTALLATION

A. Provide SPD where indicated.

B. Provide factory mounted SPD integral with distribution equipment except remote mounted SPD may be used for panelboard construction.

C. Remote Mounted SPD Installation Requirements:

1. Provide SPD next (close nippled) to equipment enclosure near panelboard overcurrent device provided for the purpose. Wiring leads for remote device shall be as short and straight as possible, but in no case shall exceed 12 inches in length.
2. Comply with manufacturer's recommendations for overcurrent protection.
3. Provide additional equipment grounding terminal in panel for SPD ground connection where required to comply with maximum lead length specified for remote mounted SPD.
4. Provide recessed mounting with flush trim plate where SPD is installed at flush mounted panelboards. Obtain rough-in inspection by the Architect/Engineer prior to cover of recessed installation.

END OF SECTION

SECTION 26 50 00 – LIGHTING FIXTURES

PART 1 GENERAL

1.1 SECTION INCLUDES

A. Interior Luminaires and Accessories

B. Exterior Luminaires and Accessories

C. Lamps

D. Ballasts and Led Drivers

E. Poles and Concrete Bases

F. Emergency Lighting Equipment

1.2 RELATED SECTIONS

A. Concrete for Bases: Comply with Division 03 - Concrete.

1.3 COORDINATION

A. Confirm luminaire type, mounting, and recessed depth is compatible with ceiling system prior to ordering. Coordinate with architectural reflected ceiling plans, sections, and details.

B. Determine final luminaire locations according to architectural reflected ceiling plans and elevations. In spaces open to structure, coordinate final luminaire locations and mounting heights with ductwork, piping, and structural members and submit final plan to Architect/Engineer for approval.

C. Coordinate dimensions and mounting of under-cabinet and other casework lighting with the cabinet and/or casework product vendor(s) prior to ordering light fixtures.

1.4 SUBMITTALS

A. Submit product data for all items specified under Part 2 of this section and scheduled on the drawings. Include in submittal and in Operations and Maintenance Manual a coversheet listing each fixture type with corresponding LED/lamp and driver/ballast data.

B. Submit shop drawings for Emergency Lighting System UPS equipment.

1.5 OPERATION AND MAINTENANCE DATA AND TRAINING

A. Submit all data in Operation and Maintenance Manuals.

B. Provide onsite training on driver and LED board replacement for each type of luminaire installed.

C. Lighting Inverter: Include instructions for normal operation, routine maintenance requirements, service manuals and testing procedures in Operation and Maintenance Manual. Provide onsite Owner training.

D. Include documentation from system start up.

1.6 WARRANTY

A. LED Luminaires and Fixture Ballasts: Provide five year comprehensive warranty.

B. Lighting Inverters: Provide two year extended warranty with factory start up and onsite service.

1.7 EXTRA STOCK

A. Lighting Inverter: Provide extra stock of filter material, quantity for a complete filter replacement for all installed units.

PART 2 PRODUCTS

2.1 ACCEPTABLE MANUFACTURERS

A. Luminaires & Accessories: Identified in Fixture Schedule.

B. Fluorescent Lamps: General Electric, Osram Sylvania, North American Philips.

C. High Intensity Discharge (HID) Lamps: General Electric, Osram Sylvania, Venture Lighting.

D. Fluorescent Ballasts, Electronic: Advance, GE, Osram Sylvania.

E. HID Ballasts: Advance, Valmont, Jefferson, Universal, Widelight.

F. Incandescent Lamps: General Electric, Osram Sylvania, North American Philips.

G. Unit Emergency Ballasts and Transfer Relays: Identified in Fixture Schedule.

H. UPS Central Power Supply: Chloride, Crucial Power, Prescolite, Lithonia, Sure-Lites.

2.2 LAMPS

A. Fluorescent T8: 3500K, 85 CRI minimum. Initial lumens at 25°C/77°F shall be 3000 minimum for 48 inch lamps and 5900 minimum for 96 inch lamps.

B. Fluorescent T5: 3500K, 85 CRI minimum. Initial lumens at 25°C/77°F shall be 2600 minimum for 48 inch lamps.

C. Fluorescent T5HO: 3500K, 85 CRI minimum. Initial lumens at 25°C/77°F shall be 4450 minimum for 48 inch lamps.

D. Compact Fluorescent: 3500K, 82 CRI minimum.

E. HID: ANSI 78; suitable for intended use. Lamps provided for open fixtures shall be ANSI O (Open Fixture) rated. Metal halide lamps rated 150 watts and larger shall be pulse start. Color temperature for metal halide lamps unless otherwise indicated shall be 3600K for 175 watt and above, 3000K below 175 watt.

F. General Use Incandescent: Inside frosted, 125 volt rating.

2.3 FLUORESCENT BALLASTS

A. General: ANSI C82.1, NEMA Premium Efficiency Label; electronic solid state high frequency type, high power factor, Class P, CBM/ETL certified, 10% maximum total harmonic distortion (THD), 1.5 maximum line current crest factor, normal ballast factor (.88 for T8 lamps and 1.00 for T5 and T5HO lamps), dual rated 120/277 volts. Ballasts for 32 watt T8, 28 watt T5, and 54 watt T5HO lamps shall have programmed rapid start feature to increase lamp life.

B. Sound Rating: Group A.

C. Low Temperature Ballasts: Minimum starting ambient temperature of 0 degrees F.

D. Ballast Location: Center mount on suspended fixtures.

E. Split Switching: Where split switching of fluorescent fixtures is indicated, provide separate ballasts and wire so that inboard lamps are switched separately from outboard lamps.

F. Accessories: Provide ballast disconnect.

2.4 FLUORESCENT BALLASTS - COMPACT LAMPS

A. General: ANSI C82.1; programmed start electronic solid state high frequency type, high power factor, Class P, CBM/ETL certified, 10% maximum total harmonic distortion (THD), 1.7 maximum line current crest factor, 1.00 nominal ballast factor, dual rated 120/277 volts, for broad range lamp applications.

B. Sound Rating: Group A.

C. Accessories: Provide ballast disconnect.

2.5 FLUORSECENT DIMMING BALLASTS

A. Ballasts: UL listed, program start, Class P thermally protected, 0-10 volt DC solid state electronic dimming ballast, Class A sound rating, 100% to 5% or better dimming range, 13% maximum total harmonic distortion (THD). Advance Mark 7, Sylvania Powersense or Helios, Universal SuperDim.

B. Accessories: Provide ballast disconnect.

2.6 HID BALLASTS

A. General: ANSI C82.4; constant wattage autotransformer (CWA) type, + 10% allowable line voltage variation, unless otherwise indicated.

B. Metal Halide Ballasts: Provide pulse start ballasts for lamps rated 150 watts and larger. Comply with latest Department of Energy (DOE) and Energy Independence and Security Act (EISA) minimum energy efficiency requirements.

C. Multi-Tap Ballasts: Rated 120/208/240/277 volt, unless otherwise noted.

D. Ballasts for Commercial Indoor Luminaries: Provide Ultra- quiet encapsulated type with resetting thermal protector.

2.7 LED LUMINAIRES

A. Indoor luminaires shall comply with following requirements unless otherwise scheduled on the drawings: UL listed, Reduction of Hazardous Substance (ROHS) compliant, 3500K color temperature, 80 CRI minimum, listed for 25 degree C minimum ambient operation, integral driver, integral surge, open circuit, short circuit, and overload protection, L70 at 50,000 hours or better per IESNA LM-80. Provide dimmable driver for low voltage 0-10 volt control to 10% of lumen output except dimming drivers that have daylight responsive control shall dim to completely OFF.

B. Outdoor luminaires shall comply with following requirements unless otherwise scheduled on the drawings: UL listed, Reduction of Hazardous Substance (ROHS) compliant, IP66 rated, 4000K color temperature, 70 CRI minimum, listed for -20 degree C to 40 degree C ambient or better operation, integral driver,

integral surge, open circuit, short circuit, and overload protection, rated L70 at 50,000 hours or better per IESNA LM-80. Provide dimmable driver suitable for 0-10 volt control.

C. Recessed LED luminaires shall have drivers, modules, and reflectors accessible, serviceable, and replaceable from below the ceiling.

2.8 FIXTURE WHIPS

A. 3/8-inch flexible conduit or approved MC cable assembly with circuit and equipment ground conductors; 72 inch maximum length.

B. Where fixtures are provided with pre-installed whips, verify wiring arrangement, termination location, and installation clearances prior to ordering.

2.9 FIXTURE ACCESSORIES

A. Provide necessary hangers, brackets, plates, anchors, and other mounting accessories required by construction features and ceiling conditions. Comply with requirements of Section 26 05 00, Basic Materials and Methods.

B. Fluorescent Ballast Disconnect: UL listed polarized male-female plug set to disconnect simultaneously from the source of supply all conductor of the ballast, including the grounded conductor. Provide for each ballast within ballast housing of light fixture.

C. Pendants: Provide single pipe stem type with self-aligning swivel hangar and canopy and suitable for sloped ceilings, stem length as required.

D. Allow sufficient length for pendants, cables, chains, conduit, or rods as specified to install hanging fixtures at 8 feet above finished floor or 36 inches below the ceiling, whichever is lower, unless otherwise indicated in the construction documents.

E. Wireguards: Provide wireguards for all surface mounted and industrial fixtures installed in Gymnasiums and Multi-Purpose Rooms.

2.10 LIGHTING POLES

A. Wind Load Rating: 100 mph with luminaires and brackets installed.

B. Anchor Bolts: As recommended by pole manufacturer. Provide template, flat washers, lock washers, and hex nuts for each pole.

2.11 EMERGENCY LIGHTING SYSTEM UPS

A. UL924 and NEC Article 700; Central uninterruptible power supply (UPS) for emergency lighting applications using any combination of fluorescent, incandescent, HID, or LED lighting, magnetic ballasts, electronic ballasts, and electronic LED drivers, ANSI/IEEE C62.41 Category A & B surge compliant. Provide rating and input/output voltage configuration as indicated.

B. Batteries: 10 year rated sealed lead calcium batteries installed within a NEMA 1 cabinet. Provide full light output for 90 minutes.

C. Accessories: Input circuit breaker, maintenance by-pass, battery disconnect, output circuit breaker(s), self-diagnostics and alarms, automatic battery recharge, remote computer interface with software, factory start-up. Provide instructions for seismic anchoring to comply with requirements of the IBC for seismic design category F.

2.12 LIGHTING FIXTURE SCHEDULE

A. See Drawings.

PART 3 EXECUTION

3.1 INSTALLATION

A. Provide LED modules/lamps in luminaires provided under this Section.

B. Provide wiring, installation, and lamps for lighting fixtures furnished under other Sections or by Owner, including fixtures furnished as part of hoods and equipment (e.g. range hoods, kitchen hoods, fume hoods, and walk-in HVAC equipment). Incandescent lamps shall be maximum listed wattage of fixture except when smaller wattage is indicated.

C. Set lighting fixtures plumb, square, and level; measure mounting heights to center of fixture for wall mounted and to bottom of fixture for pendant hung.

D. Support lighting fixtures from building structural members; provide metal channels or additional blocking and framing as required for fixture support between structural members or to avoid interference from mechanical pipes and ducts. Conceal supports within building construction in finished spaces.

E. Recessed and surface mounted lighting fixtures weighing less than 56 lbs (25.4 kg) may be supported from metal ceiling suspension systems when auxiliary support from structural members using two #12 AWG wire hangers at diagonal corners are provided (hangers may be slack). Fixtures weighing 56 lbs or more must be supported directly from the structure by approved hangers.

F. Light fixtures hung below suspended ceilings by pendants, cables, chains, conduit, rods, or other means shall be supported from structure above using #9 AWG wire hanger or alternate support approved by Inspection Authorities.

G. Securely fasten recessed and surface fixtures in place; provide seismic clips (one each corner) for lay-in fixtures; attach surface fixtures tight to ceilings and walls, and secure fluorescent fixtures within 12 inches of each end.

H. Mounting height for wall mounted fixtures and for hanging fixtures supported by pendants, cable, chain, conduit, rods, or other means shall be determined by the architect/engineer during construction unless otherwise indicated in the construction documents.

I. Install suspended fixtures so that no obstruction is located within the swing range. Pendants, rods, chains, or cables 48 inches and longer shall be braced to prevent swaying. In finished spaces, use stainless steel aircraft cable for sway bracing. Single stem fixtures shall be braced with cables installed 120 degrees apart. Fixtures and fixture assemblies with two or more supports shall be braced with two cables separated 120 degrees apart and attached to the suspension yoke or bracket located at each end of the fixture or assembly (4 cables total) OR Single stem fixtures shall be braced with stainless steel aircraft cable stretched taut across the room and attached to fixture stem using a suitable stainless steel shackle and cable clamp.

J. Prior to substantial completion and before testing and operating manual or automatic fluorescent dimming systems, operate fluorescent lamps at full

brightness for the minimum hours recommended by the lamp manufacture to meet burn-in requirements.

3.2 RELAMPING

A. Relamp luminaires which have failed lamps at completion of work.

3.3 ADJUSTING AND CLEANING

A. Align and tighten luminaires and clean reflectors, lenses and diffusers at completion of work. Clean paint splatters, dirt, and debris from installed luminaires.

B. Make final aiming adjustment of directional luminaires as directed by Architect/Engineer at completion of work.

3.4 EMERGENCY LIGHTING EQUIPMENT

A. Exit, Self-Contained Emergency, Night lights: Connect ahead of switch control on local lighting circuit.

B. Integral Emergency Lighting Pack for Fluorescent Lighting: Install in ballast channel with charging indicator light and test switch separately mounted on or adjacent to fixture so as to be visible and accessible. Connect emergency pack to unswitched conductor ahead of local switch control. Connect fixture ballast so that lamps are switched in normal mode unless fixture is indicated as Night Light.

3.5 FIRE RATED CONSTRUCTION

A. Recessed Luminaires: Provide field fabricated fire resistive shell acceptable to Fire Marshal and conforming to requirements of UL assembly rating for ceiling installed. Allow clearances around fixture for adequate ventilation per fixture manufacturers recommendations and UL listing.

3.6 THERMAL AND SOUND INSULATION

A. Coordinate with General Contractor to ensure provisions are made to support insulation materials minimum of 3 inches clear of recessed lighting fixtures that are not IC rated.

3.7 CONCRETE BASES

A. General: Provide concrete bases for anchor base poles and for pathway lights.

B. Pole Bases: Size and construction as indicated. Install anchors using template obtained from pole manufacturer. Install poles on bases plumb; provide double nuts or shims for adjustment. Grout around pole bases.

C. Bollard Bases: 12 inches square x 36 inches deep, flush with hard surface finish grade except in landscape or unfinished areas set 2-inch above final grade. Provide 1/2-inch chamfer on all exposed edges.

3.8 EMBEDDED POLES

A. Hole Auguring: Provide round hole to depth indicated. Hole width shall be sufficient to allow mechanical compaction around pole base.

B. Backfill and Compaction: Backfill hole with 8-1 dry mix of fine crushed stone and Portland cement, compacted in 12-inch lifts.

3.9 TRAINING

A. Coordinate with Architect to arrange onsite training for luminaire and lighting inverters. Allow 20 minutes per each type of installed luminare to review driver and LED board replacement. Allow four hours of factory training for the lighting inverters.

END OF SECTION

SECTION 27 10 01 – TELECOMMUNICATIONS STRUCTURED CABLING

PART 1 GENERAL

1.1 SECTION INCLUDES

A. Cable and Accessories

B. Station Outlets

C. Cross-Connect Components

D. Equipment Mounting

E. Structured Cabling System Design

1.2 RELATED SECTIONS

A. Section 26 01 00, Electrical General Requirements

B. Section 26 04 00, Existing Systems

C. Section 26 05 00, Basic Materials & Methods

D. Section 26 05 26, Grounding & Bonding

E. Section 26 05 30, Low Voltage Signal Systems Pathway

1.3 REGULATORY REQUIREMENTS

A. Conform to requirements of the latest revisions of the following standards:

TIA/EIA-569	Commercial Building Standard for Telecommunications Pathways and Spaces.
TIA/EIA-568-B-1,2,3	Commercial Building Telecommunication Standard, including all addendums.
TIA/EIA-455-61	FOTP-61, Measurement of Fiber or Cable Attenuation Using An OTDR
EIA/TIA-606	Administration Standard for the Telecommunications Infrastructure of Commercial Buildings
EIA/TIA-607	Commercial Building Grounding and Bonding Requirements for Telecommunications

1.4 SYSTEM DESCRIPTION

A. Provide design and installation of a structured cabling system consisting of horizontal station wiring using unshielded twisted pair (UTP) cabling, with UTP backbone for voice PDS and fiber optic backbone for data PDS.

B. Voice (telephone) Network: Conform to TIA/EIA Category 5 requirements or better. Connect each station voice jack to wiring terminal blocks at the nearest Distribution Frame or wiring closet located on same floor unless otherwise indicated.

C. Data (computer) Network: Conform to TIA/EIA Category 5 enhanced requirements. Terminate each station data jack to a patch panel at the nearest Distribution Frame or wiring closet located on same floor unless otherwise indicated.

D. Voice Network Backbone: Conform to TIA/EIA Category 5 requirements or better. Where trunk cable pair quantities are not shown, provide multi-pair cable

sized to equal one (1) four pair cable for each installed active and blanked station outlet plus minimum 30% spare capacity. Terminate trunk cables on wiring terminal blocks at each horizontal cross connect end and at the main cross connect end, 2 pair labeling minimum.

E. Data Network Backbone: Provide multi-strand fiber optic cable from each Intermediate Distribution Frame (IDF) to the Main Distribution Frame (MDF). Each fiber cable shall be terminated at a fiber patch panel each end.

1.5 SUBMITTALS

A. Submit product data for all items specified under Part 2 of this section.

B. Submit shop drawings showing floor plans with room numbers, station outlet locations, horizontal station cable routing, backbone cable routing, and alpha numeric identification of terminals and jacks. Include elevation plans showing layout of cross-connect and wire management hardware. Show location and size of conduit sleeves for open cable routing.

C. Submit terminal labeling plan.

D. Submit documentation for tests required under Part 3 of this section.

1.6 OPERATION AND MAINTENANCE DATA

A. Include data for complete structured cabling system in Operation and Maintenance Manual.

B. Include cable certification test results for each UTP and Fiber Optic cable.

1.7 QUALIFICATIONS

A. Company: Contractor specializing in the design, installation, and testing of high speed data and voice network systems for a minimum of five years.

B. Installers: Trained and experienced technicians of the company, certified by the product manufacturer and by Building Industry Consulting Service International (BICSI) for the PDS cabling, hardware, and accessories being installed, shall perform the work.

1.8 WARRANTY

A. Provide 5 year minimum product warranty and 15 year minimum link/channel transmission warranty.

PART 2 PRODUCTS

2.1 ACCEPTABLE MANUFACTURER

A. UTP Cable: Systimax, Bert-Tek, CommScope, AMP.

B. UTP Station Outlets and Cross-Connect Components: Systimax, AMP, Ortronics.

C Fiber Optic Cable, Equipment, and Accessories: Siecor, CommScope, AMP, Ortronics.

2.2 GENERAL REQUIREMENTS

A. All products provided under Part 2 shall meet or exceed TIA/EIA-568-B.1 Category 5 enhanced, TIA/EIA-568-B.3-1 Optical Fiber, unless specifically

indicated otherwise.

2.3 CABLE

A. Station Cable, Voice: UL type CMP, Category 5 or better, 24 AWG solid copper, 4-pair unshielded twisted pair, jacket overall, color coded, [listed for use in ducts, plenums, and other air handling spaces] . Cable installed outdoors shall have a water blocking core and suitable for installation below grade in conduit.

B. Station Cable, Data: UL type CMP, Category 5 extended frequency (350MHz), 24 AWG solid copper, 4-pair unshielded twisted pair, jacket overall, color coded, listed for use in ducts, plenums, and other air handling spaces [non plenum rated]. Cable installed outdoors shall have a water blocking core and be suitable for installation below grade in conduit.

C. Trunk Cable (Telephone Backbone): UL Type CMP, TIA/EIA Category 5 or better, 24 AWG solid copper, multiple unshielded twisted pairs, color coded, jacket overall, listed for use in ducts, plenums, and other air handling spaces. Cable installed outdoors shall be gel filled and suitable for installation below grade in conduit.

D. Singlemode Indoor/Outdoor Riser Rated Fiber Optic Cable (Data Backbone): UL listed Type OFNR, (12) strand, match clad fiber-optic distribution cables, tight buffered with fire retardent polyethlene, glass reinforced polymer central strength member, aramid yarn flexible strength elements, and fire retardant polyethlene outer jacket and water blocking system. Optimum performance from 1265 nm to 1625 nm.

E. Singlemode Plenum Rated Fiber Optic Cable (Data Backbone): UL listed Type OFNP, (12) strand, match clad fiber-optic distribution cables, tight buffered with fire retardent polyethlene, glass reinforced polymer central strength member, aramid yarn flexible strength elements, and plenum outer jacket. Optimum performance from 1265 nm to 1625 nm.

2.4 CABLE ACCESSORIES

A. Cable Support: Extra wide base J hooks, with plenum rated tie wraps. Caddy cable cat system or equal. Staples, straps, bridle rings, and similar supports are prohibited.

B. Fiber Protection, Inside Plant: Non-metallic corrugated flexible raceway, 3/4 inch minimum diameter, orange color, UL listed for use with OFNR fiber cable. Carlon Riser-Gard or equal.

C. Fiber Protection, Outside Plant: Non-metallic corrugated flexible raceway, 1 inch diameter, orange color, UL listed for use as an innerduct within conduit systems.

D. Wire Management: Provide vertical wire management channels each side of equipment racks for strain relief, bend radius, and cable routing. Include cable trough for station cable routing and front mounted wire management rings for patch cords.

E. UTP Voice Cable Circuit Protection, Outside Plant: UL 497, solid-state, fused, press to fit cross-connect block protectors with automatic reset and ground bar attachment. ITW Linx UltraLinx series protector or equal. Provide for each circuit pair.

F. UTP Data Cable Circuit Protection, Outside Plant: UL 497, solid state modular protector. Provide rack mounted patch panel configuration for bundles or pathways that exceed 6 cables. ITW Linx or equal. Provide for protection for each cable.

2.5 STATION OUTLETS

A. Voice Jacks: TIA/EIA - T568A RJ1, 6-position/6-conductor, non-keyed modular jack, with symbol or color code to identify use. For wall phones provide integral stainless steel wall plate with mounting lugs compatible with telephone handset.

B. Data Jacks: TIA/EIA - T568A RJ45, 8-position/8-conductor, keyed modular jack, with symbol or color code to identify use.

C. Fiber Couplers: Duplex ST multimode/single-mode modular adapter with 45 degree metal sleeves and dust caps.

D. Faceplates: Thermoplastic with identification strip top and bottom; 3 module/6 port capacity; color to match wiring devices. Provide blank modules for unused plate opening.

E. Floor Box Outlets: Standard duplex mounting strap with modular snap-in outlet jacks. Provide blank insert where ever jack is not installed.

F. Outlets in Two-Piece Surface Metal Raceway: Decorator (rectangular) style duplex mounting strap with modular snap-in outlet jacks. Provide blank insert where ever jack is not installed.

2.6 CROSS-CONNECT COMPONENTS

A. Voice: 66M1 connecting blocks with stand-off brackets, bridging clips, cable troughs, and distribution rings as required for cable management. Provide labeling strips for conductor assignment identification.

B. Data: Printed circuit board patch panels, 6-port modular construction with RJ45 keyed 8-position jacks, AT&T 110 connector system, T568A wiring, identification strips, and 19 inch rack mounting, unless otherwise indicated. Provide sufficient panels and quantity of ports equal to the number of terminated stations cables plus 20%.

C. Fiber: Twelve (12) port ST style panel installed in locking protective cabinet with provisions for fiber storage, fiber routing, and connector identification; 19 inch rack mounting, unless otherwise indicated.

D. Data Patch Cords: UL type CM, 4-pair cable with RJ45 plug each end, length not to exceed 4 meters, quantity equal to total installed station jacks plus 10 %. Provide 25% 3-feet, 50%-5-feet, and 25% 7-feet long, color blue unless otherwise directed.

E. Fiber Optic Connectors: Multi-mode ST style. Quick cure epoxy adhesive. Bayonet style coupling with multi-mode ceramic or glass-in-ceramic ferrule, keyed for repeatable performance.

F. Multi-Mode Fiber Patch Cords: Preassembled single fiber, multi-mode 62.5/125 micron/ULTRA grade jumper cord with connectors each end, length 3 meters. Provide one patch cord for each terminated/assigned fiber patch panel port plus 10%, with ST to ST or ST to SC connectors as required (verify).

G. Singlemode Fiber Patch Cords: Preassembled singlemode patch cord with pull-proof connectors each end, length 3 meters. Provide one patch cord for each terminated/assigned fiber patch panel port plus 10%, with ST to ST or ST to SC connectors as required (verify).

2.7 EQUIPMENT MOUNTING AND ACCESSORIES

A. Equipment Racks, Floor: Aluminum self supporting frame designed for open rack mounting of telecommunications equipment, base anchor design, pre-drilled EIA mounting holes, 19 inches wide by 84 inches high unless otherwise indicated. Provide four equipment shelves with mounting hardware. Finish: black.

B. Equipment Racks, Wall: Steel or aluminum one piece wall bracket with hinged swing out panel mount feature, 19 inches wide by 6 inch nominal deep.

C. Equipment Cabinets, Floor: Free standing, removable side panels, hinged steel vented rear door with lock, hinged steel [plexiglass] front with lock, nominal 24 inch by 24 inch by 84 inch unless otherwise indicated with EIA provisions for rack mounted 19 inch wide equipment, integral ventilation blower and 8 outlet (minimum) plug strip, and floor levelers. Furnish with four equipment shelves and mounting hardware. Locks shall be keyed to match branch circuit panelboards. Finish: grey or black enamel.

D. Equipment Cabinets, Wall: Wall mounted, vented side panels, hinged steel door with lock, 48H X 21W X 20D inch minimum, hinged swing out panel mounting frame with EIA provisions for rack mounted 19 inch wide equipment. Provide with integral 250 CFM minimum ventilation fan and two equipment shelves and mounting hardware. Locks shall be keyed to match branch circuit panelboards. Finish: grey or black enamel.

E. Wire Management, Equipment Racks: Provide vertical wire management channels each side of equipment racks for strain relief, bend radius, and cable routing. At each patch panel provide rear mounted strain relief bar for station cable routing and front mounted wire management rings or cable trough for patch cords.

F. Power Supplies: Rack mounted, 120 VAC, line interactive, uninterruptible power supply (UPS) with surge protection and filtering, (6) NEMA 5-15R receptacle outlets (minimum), USB connectivity, status display for On Line/On Battery/Replace Battery/Overload, and low battery/on battery alarms. VA rating indicated. APC Smart UPS SUA series or approved.

G. Plug Strips: Rack mounted, 120 VAC power strip, with (8) NEMA 5-15R rear mounted 90 degree receptacle outlets, power switch, UL 1449 surge protective device, and 20 amp 6-foot cord & plug input.

PART 3 EXECUTION

3.1 PREPARATION

A. Provide location and size of conduit sleeves for routing open cables thru fire rated construction, draft stops, and partition walls in attics, crawl spaces, and accessible ceiling spaces. Size sleeves with 25% minimum space capacity. Indicate on shop drawings for coordination with Section 27 05 80.

3.2 INSTALLATION

A. Comply with product manufacturer installation instructions. Conform to requirements of TIA/EIA 568 and TIA/EIA 569 for specified Category.

B. Locate telephone jacks above data jacks at outlets where both type are installed.

C. Label cross connect terminals sequentially using an numeric or alpha-numeric identification plan submitted for approval. Label cable at each end with a permanent cable marker to match the corresponding terminal number. Label each station jack using polyester film adhesive pre-labeled markers to indicate corresponding terminal number.

D. Conceal wiring in suspended ceiling spaces, attic spaces, crawl spaces, and in wall construction. Utilize conduit rough-in specified in Section 27 05 28 and shown on drawings. Install cable in neat parallel runs within cable trays and down to cross-connect hardware without rolls, twists, or loops.

E. Install cables continuous without splicing. Install open cable above accessible suspended ceilings parallel and perpendicular to building lines. Bundle cables with nylon tie wraps and support cable in tray, conduit sleeves, or from structure using specified J hooks at intervals not to exceed 4 ½ feet. Where bundled cable exceeds 6 cables, provide separate voice and data bundles, 48 cables maximum per bundle.

F. Leave 10 feet of cable slack at MDF/IDF. Leave 12 inch cable slack at outlets.

G. Seal conduit sleeves thru fire rated construction using silicone foam system, Chase-Foam CTC PR-855, 3M CP 25, or Dow Corning RTV.

H. Maintain a minimum 6 inch separation from parallel power wiring. Do not share bore or knock out holes thru wall studs and other structural members with power wiring.

I. Secure floor mounted equipment racks with four (4) 5/8 inch diameter anchor bolts, one near each corner of floor base. Use lead expansion anchors in concrete floors.

J. Bond together all equipment racks to room cable tray and to communications service ground using #1/0 AWG conductor minimum. Comply with Section 26 05 26 for grounding materials.

K. Voice network shall utilize dual base T wiring for termination of each station cable to dual voice jacks. Data PDS shall provide termination of each station cable to a single 8-position /8-conductor data jack. Color coding and pin number termination sequence for each PDS shall conform to established standards approved by Architect/Engineer.

L. Provide fiber optic cable within protective non-metallic raceway system. Install raceway to within 18 inches of fiber termination. [For horizontal station fiber network, provide conduit connector for protective raceways that terminate at station outlet conduit riser.]

M. Equipment Cabinets: Provide equipment cabinets for IDF and MDF racks located in attic spaces and where otherwise indicated.

N. Provide required telecommunication wiring between fire alarm transmitter and telephone service demarcation point. Verify requirements with fire alarm system

provider. Allow for (2) RJ31 jacks with dedicated Category 5 or better station cable terminated at a shared headend cross connect block reserved for analog telephone service interface.

O. Provide required telecommunication wiring between intrusion alarm transmitter and telephone service demarcation point. Verify requirements with intrusion alarm system provider. Allow for (2) RJ31 jacks with dedicated Category 5 or better station cable terminated at a shared headend cross connect block reserved for analog telephone service interface.

P. Provide required telecommunication wiring between each elevator machine room and telephone service demarcation point. Verify requirements with elevator system provider. Allow for (2) RJ11 jacks with dedicated Category 5 or better station cable terminated at a shared headend cross connect block reserved for analog telephone service interface.

Q. Provide UL497 primary circuit protection at building entrance and building exit for all outside plant copper telecommunication cabling.

3.3 TESTING

A. UTP Cabling:

1. Perform continuity test on each wire/pair prior to cover. Verify no open circuits, short circuits, or accidental grounds exist.
2. The system shall be certified to meet or exceed the specifications as set forth in TIA/EIA TSB40 and TIA/EIA 606-A for specified Category compliance. Certifications shall include the following parameters for each pair of each cable installed:
   a. Wire map (pin to pin connectivity)
   b. Length (in feet)
   c. Attenuation to Crosstalk Ratio (ACR)
   d. DC Loop Resistance
   e. Ambient noise
   f. Near-End Crosstalk (NEXT)
   g. Equal-Level Far-End Crosstalk (ELFEXT)
   h. Return Loss (RL)
3. Use test equipment such as the Ideal LANTEK 6 or approved equal to measure all essential cable parameters specified by TIA/EIA and UL thru Category 6. Provide a written record of these tests.
4. Correct malfunctions when detected and proceed with testing. Record test results on a "UTP Cable Test Results" form showing frequency tested and PASS/FAIL results.

B. Fiber Optic Cabling:

1. OTDR Acceptance Tests: Test fiber optic cable for continuity, normalized fiber loss, and overall length verification, using an Optical Time Domain Reflectometer (OTDR). Attenuation measurements in dB/km shall be performed for each fiber at 850 nm and 1300 nm wavelength. Perform tests

of cable both on reel when delivery of cable is taken, and after cable is installed and before connectorizing. Attenuation of mufti-mode fibers shall be no greater than 3.0 dB/km at 850 nm and no greater than 1.0 dB/km at 1300 nm. Installed cables with any damaged fibers shall be removed and replaced at Contractor expense.

2. Visual Inspection Reports: Visual inspection of each field installed fiber optic connector shall be documented to include report on end face quality, polish, and informational comments.
3. Optical Loss Tests: Fibers shall be loss tested in both directions at 850 nm and 1300 nm wavelengths after connectorization. Acceptable attenuation shall be any value less than the fiber attenuation plus 1 dB (0.5 dB per connector).
4. Use test equipment such as the Ideal FIBERTEK or approved equal to measure all essential parameters specified. Provide a written record of these tests.
5. Correct malfunctions when detected and proceed with testing. Record test results on a "Fiber Optic Cable Test Results" form showing PASS/FAIL results.

3.4 DOCUMENTATION

A. Documentation includes the following and shall be delivered to the Architect/Engineer within 20 working days after the wiring is completed.

1. Certification documents and test results
2. Record drawings
3. Permanent ID record at each MDF and IDF location.

END OF SECTION

SECTION 28 13 10 – CONTROLLED ENTRANCE AND EGRESS SYSTEM

PART 1 GENERAL

1.1 SECTION INCLUDES

A. Magnetic locks

B. Keypad stations

C. Central control and power supplies

1.2 RELATED SECTIONS

A. Section 26 01 00, Electrical General Requirements

B. Section 26 05 00, Basic Materials and Methods

C. Section 28 31 00, Fire Detection and Alarm System

1.3 REGULATORY REQUIREMENTS

A. Conform to requirements of WAC 51-50-1008, Doors, Gates, and Turnstiles.

1.4 SUBMITTALS

A. Submit product data for all items specified under Part 2 of this Section.

B. Submit shop drawings showing wiring diagrams and system layout. Indicate wire and cable requirements and conductor terminations. Show equipment and device locations, routing and size of conduit, back box requirements, and a list of materials.

C. Submit report on tests required under Part 3 of this section.

1.5 OPERATION AND MAINTENANCE DATA

A. Include data for complete system in Operation and Maintenance Manuals.

1.6 SYSTEM DESCRIPTION

A. System Features:

1. Magnetic locks at designated access controlled egress doors and gates.
2. Access control using keypad/reader stations each side of access controlled egress doors and gates.
3. Central power supply/controller with battery backup.
4. Fire alarm system interface shall de-energize magnetic locks on alarm.

B. System Operation and Procedures: System operating procedures, programming codes, and posting of instructions for exiting at designated controlled egress doors and gates shall be provided by Owner.

PART 2 PRODUCTS

2.1 MAGNETIC LOCKS

A. Indoor Magnetic Locks: Surface mount, single door or double door as required, with 1200 pounds holding force, door monitoring, bicolor lock/unlock status LED, surge suppressor, and lock sensor. Provide aluminum, bronze, or black finish as

selected by Architect. Maximum current draw at 12VDC shall be 0.5 amps per door.

B. Outdoor Magnetic Locks: Surface mount, gate lock, with 600 pounds holding force, surge suppressor, lock sensor, aluminum or stainless steel weather resistant housing. Maximum current draw at 12VDC shall be 0.375 amps.

C. Accessories: Provide required brackets, armature plates, and mounting hardware required for installation.

2.2 KEYPAD STATIONS

A. Semi-flush, indoor/outdoor, programmable, standalone, digital key pad station controller with integral proximity reader designed for access control applications. Security Door Controls (SDC) 920P or approved. Provide (2) keypad stations for each access control opening.

B. Accessories: Provide stainless steel protective weather shroud for keypad stations installed outdoors. Furnish twenty (10) reader key FOBs.

2.3 CENTRAL POWER SUPPLIES

A. UL listed filtered and regulated modular DC power controller suitable for operating multiple controlled door locations, with battery backup and NEMA 1 surface cabinet. Security Door Controls (SDC) 63-RF series or approved. Provide amp capacity and quantity required for system connected load with 125% minimum spare capacity.

2.4 MATERIALS

A. Conductors for 120 Volt Circuits: Building wire as specified in Section 26 05 00.

B. 12 Volt DC Circuits: 22-gauge minimum, color coded, multi-conductor copper cable with overall foil shield and PVC jacket. Wire size shall be increased as required to meet voltage drop and circuit resistance characteristics of the system. Outside plant cable shall UL listed for the purpose.

C. Conduit: As specified in Section 26 05 00, metallic only.

D. Device and Junction-Boxes: As specified in Section 26 05 00, sized per device manufacturer product requirements. Outdoor surface boxes shall be cast weatherproof type.

PART 3 EXECUTION

3.1 INSTALLATION

A. Equipment and Devices:

1. Install, adjust, and test system in accordance with approved shop drawings and product manufacturer's instructions.
2. Provide recessed back boxes for semi flush installation of devices and stations unless otherwise authorized by Architect/Engineer or indicated on plans.
3. Review and demonstrate system set up and optional programming features with Owner. Provide initial programming of all keypad stations for system operation and user access codes as directed by Owner.

4. Coordinate location and installation of magnetic locks on doors and gates with products and installation requirements specified under Division 8 for doors and Division 32 for outdoor gates. Provide necessary mounting hardware and accessories to include back plates and brackets for installation.

B. Wiring:

1. Conceal wiring in suspended ceiling spaces, attic spaces, crawl spaces, and new wall construction. Exposed wiring is permitted only in existing construction where wiring cannot be fished.
2. Install conductors in conduit except open cable wiring may be installed in accessible ceiling, attic, and crawl spaces.
3. Consistently color code wiring throughout per Shop Drawings. Do not splice conductors. Terminate conductors at screw terminals of equipment and devices.

C. Requirements for Open Cable:

1. Install cable parallel and perpendicular to building lines.
2. Cable installation shall comply with NEC 300-4 where installed through studs, joists, rafters, and similar structural members.
3. Secure cable by straps or similar fittings so designed and installed as not to damage the cable, at intervals not exceeding 4.5 feet.
4. Protect cables with plastic bushing through device plates and outlet boxes.
5. Provide conduit sleeves for installing cables thru fire rated construction, draft stops, and partition walls in attics, crawl spaces, and accessible ceiling spaces.

3.2 TESTING

A. Test conductors for continuity prior to cover.

B. Test complete system including the central ON/OFF control station and keypad, reader, and magnetic lock functions at each controlled egress location. Demonstrate satisfactory operation in presence of Owner and his representatives. Furnish all equipment, required for testing.

3.3 DEMONSTRATION AND INSTRUCTIONS

A. Demonstrate programming, operation, and maintenance of system to Owner's personnel prior to Contract Closeout. Allow one two hour session scheduled at convenience of Owner.

B. Use operation and maintenance manuals as basis of instruction. Review contents of manual with personnel in detail to explain all aspects of operation and maintenance.

END OF SECTION

SECTION 28 23 00 – VIDEO SURVEILLANCE (CCTV) SYSTEM

PART 1 GENERAL

1.1 SECTION INCLUDES

A. IP Cameras

B. Video Management System

C. Network Recorder

D. Cable and Accessories

1.2 RELATED SECTIONS

A. Section 26 01 00, Electrical General Requirements

B. Section 26 05 00, Basic Materials and Methods

C. Section 26 05 26, Grounding and Bonding

D. Section 28 05 30, Low Voltage Electrical Systems Pathways

1.3 SYSTEM DESCRIPTION

A. Description: Provide IP network video surveillance and recording system.

B. Capacity:

1. Cameras: 8
2. Client Work Stations: 5
3. Video Storage: 8 terabytes (TB)

C. Distribution: Use Owner furnished local area network.

1.4 SUBMITTALS

A. Schedule a meeting with Owner to review products and system operation, software, and features prior to submitting Shop Drawings. Provide assistance and recommendation to coordinate available options and settings for initial system set up and programming.

B. Product Data: Submit for all items specified under Part 2 of this specification. Provide showing electrical characteristics and connection requirements for each component.

C. Shop Drawings: Indicate electrical characteristics and connection requirements, including system wiring diagrams. Show plan of equipment and device locations, type, quantities, and routing of wiring. Show direction and field of view for each camera.

1.5 PROJECT RECORD DOCUMENTS

A. Include data for complete system in Operation and Maintenance Manuals.

B. Record actual locations of cameras and routing camera cable.

C. Include instructions for starting, operating, and routine trouble shooting procedures.

D. Include instructions for using system software.

1.6 QUALIFICATIONS

A. Installer: Authorized installer of specified products with service facilities within 50 miles of Project, and having minimum three years experience in installation of CCTV systems.

1.7 MAINTENANCE SERVICE

A. Furnish service and maintenance of television system for one year from Date of Substantial Completion.

PART 2 PRODUCTS

2.1 ACCEPTABLE MANUFACTURERS

A. Bosch or approved.

2.2 CAMERAS

A. Vandal resistant IP dome POE HD camera for outdoor surveillance, varifocal 3-10 mm f1.3lens, IP66, day/night, H.264 quad streaming, motion/tamper/audio detection, 720p. Bosch NDN-40012-V3. Provide with matching heavy duty wall mount outdoor pendant dome bracket.

2.3 WORK STATIONS

A. Work stations with PC's and monitors shall be furnished by Owner.

2.4 NETWORK VIDEO RECORDER:

A. Windows based digital all in one rack mounted IP video surveillance recording, viewing, and management device with processor, hard drives, 8 TB storage, graphics card, DVD writer, software, and permanent licenses. Bosch DIVAR IP 7000 1U series.

2.5 BASIC MATERIALS AND ACCESSORIES

A. Cable:

1. Video Network: UL type CMP, TIA/EIA Category 6, 24 AWG solid copper, 4-pair unshielded twisted pair, color coded jacket overall, listed for use in ducts, plenums, and other air handling spaces.
2. Patch Cords: UL type CM, 4-pair cable with RJ45 plug each end, length as required.

B. Cross Connect: TIA/EIA Category 6 printed circuit board patch panels, 6-port modular construction with RJ45 keyed 8-position jacks, AT&T 110 connector system, T568B wiring, identification strips, and 19 inch rack mounting. Provide 24 port rack mounted panel.

PART 3 EXECUTION

3.1 INSTALLATION

A. Install products in accordance with manufacturers recommendations. Verify exact camera locations prior to rough-in. Provide initial and one aiming adjustment for cameras as directed. Final adjustments shall be made with

Owner's representative present for approval.

B. Provide initial programming of digital recorder to make system operational using contractor furnished PC laptop. Variable and optional software features shall be programmed as directed by the Owner. Provide final programming using final names and room numbers; coordinate with Owner and make system adjustments requested.

C. Wiring:

1. Comply with requirements of Section 26 05 00, except minimum conduit size shall be 3/4 inch. Exposed wiring is permitted only in existing construction where wiring cannot be fished.
2. Install conductors in conduit except wiring may be open cabling where installed as follows:
   a. In attic and ceiling spaces that are accessible.
   b. In cable trays.
   c. Where exposed above 16 feet in high ceiling spaces.
3. Install cable without splices. Terminate at jacks using CAT 6 RJ 45 connector.
4. Leave 12 inches minimum cable slack at each camera. Leave 36 inches minimum cable slack for each head end termination.

D. Requirements for Open Cable:

1. Install cable parallel and perpendicular to building lines.
2. Cable installation shall comply with NEC 300-4 where installed through studs, joists, rafters, and similar structural members.
3. Secure cable by straps or similar fittings so designed and installed as not to damage the cable, at intervals not exceeding 4.5 feet.
4. Protect cables with plastic bushing through device plates and outlet boxes.
5. Provide conduit sleeves for installing open signal cables thru fire rated construction and thru partition walls above accessible ceilings.

3.2 INTERFACE WITH OTHER PRODUCTS

A. Interface installation of closed circuit television system with intrusion alarm system.

1. Transmit alarm upon loss of video signal on any channel.
2. Initiate recording upon intrusion alarm.

3.3 DEMONSTRATION

A. Demonstrate system operation and provide two hours of instruction to Owner Personnel prior to Contract Closeout.

B. Conduct walking tour of Project and briefly describe function, operation, and maintenance of each component.

END OF SECTION

SECTION 28 31 00 – ADDRESSABLE FIRE ALARM SYSTEM

PART 1 GENERAL

1.1 SECTION INCLUDES

A. Building fire detection and alarm system, bidder design.

1.2 RELATED SECTIONS

A. Section 21 10 00, Water Based Fire Suppression System

B. Section 26 01 00, Electrical General Requirements

C. Section 26 04 00, Existing Systems

D. Section 26 05 00, Basic Materials and Methods

E. Section 26 05 26, Grounding and Bonding

1.3 REGULATORY REQUIREMENTS

A. Conform to requirements of Washington State Fire Marshal's office and local Fire Marshal.

B. Conform to requirements of following publications in addition to requirements of 26 01 00:

IFC International Fire Code
NFPA 72 National Fire Alarm Code
Local fire alarm code adopted by the jurisdiction

1.4 SYSTEM DESCRIPTION

A. Fire Alarm System: Supervised, non-coded, addressable, using Style 4 (Class B) signaling line circuit (SLC) intelligent loop wiring for initiating and monitoring, and Class B (two wire with end-of-line device) for signaling.

B. Existing System: . Provide equipment, devices, and wiring to maintain the existing fire alarm system and for upgrades required to accommodate new work.

OR

B. Existing System: Replace existing system complete. Remove control and annunciation equipment and all initiating, signaling, and auxiliary devices. Remove abandoned conduit and wire in accordance with requirements of Section 26 04 00.

C. Alarm Sequence of Operation: Actuation of any manual or automatic initiating device results in system ALARM which includes the following operations:

1. Display alarm status information at control panel and remote annunciator.
2. Audible and visual alarm signals operate continuously until initiating devices are restored to normal and control panel is reset. If alarm silence switch is activated, alarm LED annunciation continues. New alarm resounds signals.
3. Alarm signal is transmitted to remote Central Station.
4. Relays activate to initiate HVAC shut down, release door hold open devices, close smoke dampers, and operate elevator and stairwell pressurization fans.

D. Trouble Sequence of Operation: Grounded circuit, open circuit, power failure, or system failure results in system TROUBLE which includes the following operations:

1. Display trouble status information by zone at the control panel. Audible trouble signal operates continuously until activation of silence switch.
2. Trouble signal is transmitted to remote Central Station.

E. Sprinkler Supervision: Closing OSY, PIV, or zone valves, or abnormal air pressure for dry systems results in a system supervisory which includes the following operations:

1. Display supervisory status information at the control panel. Audible trouble signal operates continuously until activation of silence switch.
2. Sprinkler supervisory signal is transmitted to remote Central Station.

F. Duct Detector Supervision: Actuation of any smoke duct detector results in supervisory which includes the following operations:

1. Display supervisory status information at the control panel. Audible trouble signal operates continuously until activation of silence switch.
2. Duct detector supervisory signal is transmitted to remote Central Station.

G. Zoning: As approved by authority having jurisdiction. Use final room names, room number, and area designations as verified with the Owner.

1.5 SYSTEM PARAMETERS

A. Design: Comply with requirements of the International Fire Code, International Building Code, and local fire alarm code as adopted and supplemented by authority having jurisdiction and applicable for the Building Occupancy, by Group and Division, indicated in the Construction Documents. Location of control panel, remote annunciator, and door hold open devices are indicated on the Electrical Plans. [Desired location of equipment and minimum requirements for signaling and initiating devices are indicated on the Electrical Plans. Provide additional devices as required.] [Upgrade/modify existing system to accommodate new Work.]

B. Pre-bid Coordination: Obtain and review all construction documents prior to bidding as required to verify site conditions, floor plans, building sections, ceiling types, building construction, mechanical systems, building equipment and other conditions that will affect the fire alarm system design. Verify fire alarm design and system requirements with local authority having jurisdiction.

C. Fire Suppression System(s): Building(s) have [do not have] a water based fire suppression system [except]. Coordinate scope of sprinkler coverage with Section 21 10 00.

D. Device Compatibility: All alarm, initiating, and accessory devices provided shall be listed in the device compatibility document available from the manufacturer for the fire alarm control panel installed.

E. Detectors: Unless otherwise indicated, provide detectors as follows:

1. Smoke Detectors: Photo-electric or ionization type.
2. Heat Detectors:

a. Indoor high ambient temperature areas (e.g. boiler rooms, kitchens, attics, ceiling spaces, etc.): rate anticipation heat detectors.

b. Other locations: combination rate of rise and fixed temperature heat detectors.

F. Outdoor Installation: Equipment and devices installed outdoors shall be weatherproof and otherwise suitable for the application.

G. Wire Guards: Provide for detectors and signaling devices located in gymnasiums, multipurpose rooms, play sheds and similar areas of high abuse. Guards shall be listed for use with the device protected.

H. Audible Signaling Devices: Spacing, locations, and system design shall provide alarm audibility of not less than 15 db above ambient noise levels. Horn devices installed in individual rooms under 900 square feet shall be small area type.

I. Visual Signaling Devices: The following building areas and spaces are to be considered public areas subject to requirements for ADA visual signal devices: Halls, corridors, toilets, rest rooms, conference rooms, open offices, reception areas, break rooms, work rooms, waiting areas, and entries. Spacing, location, and candela rating shall comply with alarm notification visibility requirements of NFPA and ADA.

J. Elevators: Smoke detectors for Machine Room, Shaft, and Lobbies shall have auxiliary contacts to initiate elevator recall.

K. Access: Provide service access to detectors not readily accessible and to sampling tubes of duct smoke detectors.

L. Duct Smoke Detectors:

1. Provide for HVAC units rated above 2000 CFM.

2. Provide for smoke dampers unless total coverage smoke detection is provide in all areas served by the HVAC system per IMC requirements.

3. Provide each duct smoke detector with a remote LED/Test station located in an accessible location approved by the Fire Marshal.

4. Coordinate quantity, location, and access for duct smoke detectors with Division 23 Contractor.

M. Provide identification sticker on end of line (EOL) devices.

N. Wiring Method: Provide conductors installed in conduit. Open cabling not approved.

OR

N. Provide conductors installed in conduit except fire rated MC cable [or fire rated open cabling] is approved where concealed in ceiling spaces and/or building construction.

O. Device Locations: Subject to review and approval by Architect/Engineer during shop drawing review. Changes in device locations may be directed and shall be accommodated subject to Code compliance.

P. Additional Devices: In addition to initiating and signaling devices indicated and specified, include in the Contract an allowance to provide [5 each or 10%

whichever is greater] additional initiating and/or signaling devices as directed at no additional cost. Include conduit, wire, outlet box, programming, and testing.

Q. Transient Voltage Surge Suppression (TVSS): Provide TVSS protection on outside plant fire alarm circuits.

1.6 SYSTEM MONITORING

A. Provide wireless [RF] [cellular] transmission of addressable [supervisory,] alarm and trouble signals to an approved local UL Central Station. Include Central Station setup and connection charges. [Approved Central Station is].

B. Charges for 24 hour Central Station monitoring shall be paid by Owner.

1.7 TEMPORARY FIRE ALARM SYSTEM

A. Comply with requirements of Fire Marshal for areas scheduled to be occupied during construction. [The facility will be occupied and continue normal operations during the construction work. Comply with requirements of Fire Marshal regarding temporary alarm system and/or fire watch during construction. See section 26 04 00 for additional requirements.]

1.8 SUBMITTALS

A. Submit qualifications specified under Part 1 of this section.

B. Submit product data for all items specified under Part 2 of this section.

C. Provide shop drawings of complete system [of existing system and new work as required by Fire Marshal]. Include graphic annunciator plaque, wiring diagrams, system layout and battery calculations. Indicate wire color coding and termination points for control panel, remote annunciator, and each type of device. Show equipment and device locations, size, type, quantity, and routing of interconnecting wiring, end of line locations, and zoning.

D. Submit product data and shop drawings to Fire Marshal for review and approval in addition to Architect/Engineer submittal requirements.

E. Submit record drawings along with reports specified under Testing.

1.9 OPERATION AND MAINTENANCE DATA

A. Include data for complete system in Operation and Maintenance Manuals.

1.10 QUALIFICATIONS

A. Company: Have minimum five (5) years experience in the installation of fire alarm systems and capable of providing 24 hour repair service with 2 hour response time.

B. Shop Drawing Preparation: Technician possessing a current Certification in Engineering Technologies (NICET) Level III certification shall design and prepare the fire alarm system shop drawings unless otherwise approved by the AHJ.

C. Installers: Trained technicians possessing a current specialty electrician certificate of competency issued by the State of Washington and National Institute for Certification in Engineering Technologies (NICET) Level II certification shall perform the work.

D. Authorized factory representative of the system being installed shall supervise

installation, testing, and adjustment of the system.

PART 2 PRODUCTS

2.1 ACCEPTABLE MANUFACTURERS

A. Simplex

B. Gamewell

C. Edwards

D. Notifier

E. Faraday

F. Farenhyt (Silent Knight)

G. Wheelock (For Voice Evacuation)

2.2 CONTROL PANEL

A. Fire Alarm Control Panel (FACP): Microprocessor based addressable control panel with [flush] [surface] wall mounted cabinet.

OR

A. Fire Alarm Control Panel (FACP): Existing (enter manufacturer and model). Modify/upgrade existing control and batteries to accommodate new work. Provide new initiating circuits, signaling circuits, and auxiliary relays as required. Expander panel(s) may be added to accommodate new signaling devices.

B. Power Supply: 120 volt AC power input, 24 volt DC system operation. Include transient surge protection, automatic battery charger and 24 volt rechargeable, maintenance free, sealed lead-acid batteries capable of operating system under alarm condition for five minutes after a 60 hour interruption of 120 volt AC power.

C. Initiating Circuits: Supervised programmable input/output circuits (500 [125] [50] point minimum capacity) with 80 character minimum LCD status display and keypad.

D. Smoke Alarm Verification Circuit: Delays alarm and resets smoke detectors allowing second (verified) alarm initiation. Adjustable alarm delay 1-60 seconds; adjustable verification period 1-120 seconds.

E. Signal Circuits: Supervised signal modules with march time feature and trouble LED indication. Provide signal controller(s) for synchronizing strobes to flash together. Provide sufficient size and quantity so that no signal circuit is loaded more than 75% of listed capacity.

F. Audio Communications: UL 864 and UL 1711; Supervised modules as required to provide oscillator tone and voice communications through system alarm speakers. Include audio master control, oscillator control switches, speaker circuit manual control switches, pre-amp monitors, power amplifiers, hand held paging microphone, and approved recorded message announcement system. Provide amplifier(s) as required for speaker system operating capacity plus 125% minimum spare capacity. Provide flush mounted remote microphone/audio

control station where indicted.

G. Panel Status Indicators: LED annunciation of normal power, battery power, battery trouble, ground detection, system trouble, alarm silence, and trouble silence. Audible signal annunciation of any alarm or trouble condition or system.

H. Operating Controls: Lamp test, panel reset, alarm silence, trouble silence, and Drill. Operating controls shall be enabled by key switch or shall be located behind locking cabinet door.

I. History File: Minimum 400 event capacity in non-volatile memory. Include provisions to allow RS232 interfaces with remote personal computer and printer (2 ports minimum).

J. Signal Transmission: Provide output connections for addressable alarm, trouble, and supervisory signal transmission via the alarm transmitter.

K. Auxiliary Relays: As required, with 120 VAC rated contacts; include for HVAC fan shutdown, electro-magnetic door holders, elevator pressurization fan operation, smoke dampers, and elevator recall sequencing.

2.3 REMOTE ANNUNCIATOR

A. Annunciator: [Recessed] [Surface] weatherproof enclosure containing supervised back-illuminated LCD display with key enabled acknowledge, system reset, and signal silence.

OR

A. Modify or replace existing as required to accommodate new Work. Change graphics to indicate new zones and building additions.

B. Option: Where approved by the AHJ, remote annunciation may be deleted if system alarm is transmitted, received, and reported to the fire department by zone.

2.4 GRAPHIC PLAQUE

A. White plexiglass with dark contrast graphics and painted or anodized metal frame (finish selected by Architect/Engineer). Show one-line building layout by floor with zone configuration approved by Fire Marshal. Provide adjacent to each control panel and remote annunciator.

2.5 INITIATING DEVICES

A. Manual Stations: UL 38; addressable, single or dual action, downward pull lever, key reset without break-glass feature.

B. Heat Detectors: UL 521; addressable combination rate-of-rise and fixed temperature 135 deg F rated, self restoring rate-of-rise element, low profile addressable twist lock base, LED status indicator, listed for 2500 square feet. In high ambient areas provide 190 deg F fixed temperature rated detectors listed for 625 square feet.

C. Smoke Detectors, Photo-Electric Type: UL 268; addressable light scattering photodiode principle of operation, LED status indicator, test feature, integral 135 deg F fixed temperature sensor, addressable twist-lock base, supervised 2-wire operation.

D. Smoke Detectors, Ionization Type: UL 268; addressable dual chamber, LED status indicator, test feature, adjustable sensitivity, addressable twist- lock base, supervised 2-wire operation.

E. Duct Detector, Smoke: UL 268; addressable photoelectric or ionization type smoke detector, duct mounted detector housing with sampling tubes extending width of duct, visual indication of detector actuation. Provide auxiliary DPDT contacts for HVAC shutdown and/or smoke damper actuation, rated 1/8 HP at 120 VAC and 1/4 HP at 240 VAC minimum.

F. Remote Status/Test Station: 24 volt DC detector status LED indicator and key operated alarm initiating test switch mounted on a flush stainless steel cover plate. Provide engraved nameplate indicating function and location (e.g. "SMOKE DETECTOR, ELEVATOR SHAFT").

2.6 SIGNALING DEVICES

A. Alarm Speakers, Indoor: UL 1480; high fidelity voice/tone re-entrant loudspeaker, low profile housing, 400 to 4000Hz frequency range or better, 25V or 70V field selectable input, multi- tap power selection up to 2 watts minimum, rated 77 dB (UL) or better at 10 feet and 1/4 watt. Provide integral alarm strobe where indicated. Housing color shall be white or red as selected by Owner.

B. Alarm Speakers, Outdoor: UL 1480; basic voice/tone re-entrant loudspeaker, low profile weatherproof housing, 25V or 70V field selectable input, multi- tap power selection up to 8 watts rated 77 dB (UL) or better at 10 feet and 1/4 watt. Provide integral alarm strobe where indicated. Provide exterior mounted devices with weather resistant backbox. Housing color shall be white or red as selected by Owner.

C. Alarm Horns: UL 464; basic electronic horn rated 96 dB at 10 feet. Provide integral alarm light where indicated. Provide exterior mounted horns with weather resistant backbox.

D. Alarm Horns, Small Areas: UL 464; compact electronic horn rated 60 dB minimum at 10 feet, designed for flush mounting. Provide integral alarm light where indicated, mounted on front of device plate.

E. Alarm Strobes: UL 1971; lamp and flasher, field selectable intensity settings, with clear lens and visible FIRE markings on device housing. Provide standard or high candela intensity strobes as required for location and spacing of devices. Housing color shall be white or red as selected by Architect. Strobes shall be synchronized to flash together.

F. Ceiling mounting signaling devices may be installed in lieu of wall mounted subject to location, spacing, and intensity rating complying with alarm notification audibility and visibility requirements of NFPA and ADA.

2.7 AUXILIARY DEVICES AND ACCESSORIES

A. SLC Interface devices: Remote addressable module for monitoring status of alarm initiating circuit devices or to provide remote control (pilot duty) from the SLC loop.

B. Door Holders: Semi-flush magnetic door holder, 24 volt DC coil, for wall-to-door installation. [Provide floor installation where indicated.]

C. Door Closer, with Electric Hold Open: Specified under Division 8, 24 volt DC.

D. Fire Door Releasing Device, Overhead Coiling Shutters: Specified under Division 8, 24 volt DC.

E. Wire Guards: Provide on automatic detectors and signaling devices located in Gymnasium, Multipurpose Rooms, Play Sheds, and similar areas of high abuse.

F. Access Doors: Milcor Style M locking access panel, keyed to match electrical panelboards. Provide where required to maintain service access to detectors.

G. Signal Expander: Independent 4-circuit power supply with battery back-up, 120 VAC input, 24 VDC output. 1.5 amp minimum output each circuit.]

H. Audio Power Booster: Independent 2 or 4-circuit audio power supply with synchronized strobe power and battery back-up, 120 VAC, as required. Wheelock SPB series or approved.]

I. Audio Communications Remote Station: Remote microphone and control console for audio communications system, flush mount. Wheelock SP4-LOC or approved.]

J. Batteries for Equipment Power Supplies: Provide maintenance free, rechargeable type, as recommended by equipment manufacturer. Batteries provided shall not be older than 60 days from date of manufacture.

K. Transient Voltage Surge Suppression (TVSS): UL 497B; modular, solid state, multistage, automatic reset circuit protectors with screw terminals. Provide matching base for plug-in devices. Device selection shall be as recommended by product manufacturer based on type of signal circuit. Provide Edco #SLCP, PHC, and SAC series protectors installed in a Hoffman CH series hinged door enclosure with mounting board and phenolic label on enclosure front to read “FIRE ALARM TVSS”.]

2.8 CODED TRANSMISSION

A. Digital Communicator: Fire Marshal approved, UL listed, digital communicator for alarm system reporting complete with power supply, dual phone line monitoring, line seizure, supervisory feature, battery back-up, low battery reporting, and required phone cable for connection to two (2) phone jacks. Communicator shall be integral with the fire alarm control panel.

B. Alarm Transmitter: Fire Marshal approved, UL listed, wireless radio frequency (RF) or GSM transmission system complete with power supply, transceiver module, antenna, battery back-up, battery charger, low power reporting, failure reporting, mounting hardware, coaxial cable. Transmission format shall provide full addressable alarm, trouble and supervisory data and be compatible with the approved Central Station. Provide a NEMA 1 surface mounted cabinet with locking hinged door to house all transmitter components. Wireless transmitters shall be furnished with remote antenna where required for proper system operation.

2.9 MATERIALS

A. Conductors for 120 Volt Circuits: Building wire as specified in Section 26 05 00.

B. Conductors for 24 Volt DC Circuits: Comply with NFPA 70, Article 760 for insulation requirements. Solid copper conductor, minimum #14 AWG for signal

circuits and #16 AWG for initiating circuits. Jacketed twisted pair, copper conductor, with shielding as recommended by alarm system manufacturer for SLC intelligent loop wiring. Outside plant cable shall UL listed for the purpose.

C. Conduit: As specified in Section 26 05 00, metallic only.

D. MC Cable: Dual rated MC/FPLP, 90°C MC/105°C FPLP copper conductors, with ground conductor(s) and steel outer covering with red identifier. UL listed and approved for fire alarm and control, multi-conductor and/or twisted shielded pair as required.]

E. Device and Junction-Boxes: As specified in Section 26 05 00, except surface boxes shall be furnished by alarm system manufacturer to match devices. Boxes shall be red in color. Device and junction boxes located outside of buildings shall be tamper proof. Outdoor boxes shall be weatherproof.

PART 3 EXECUTION

3.1 PREPARATION

A. Coordinate with the approved Central Station to verify type of wireless transmission system to be provided. Wireless transmission system type shall be as selected by Owner where more than one option is available. Where approved wireless transmission service is not available, arrange with Owner's telephone system installer to provide two phone lines terminated at the FACP digital communicator with required telephone jacks.

B. Coordinate and arrange with the approved Central Station to verify wireless signal strength at the project site as required to verify wireless service availability.

C. After building structure is in place and prior to completion of rough-in, meet with the inspecting authority on site to review system requirements and location of devices and equipment using the approved shop drawings. The purpose of this meeting is to avoid additional devices and other required changes that are often identified during final inspection.

3.2 EXISTING SYSTEM

A. See Section 26 04 00, Existing Systems, for additional requirements.

3.3 INSTALLATION

A. Install system in accordance with manufacturer's instructions. Provide all necessary programming and adjustment of system equipment to make operational. [Provide setup and programming of the audio communications system to include an approved pre-recorded message as required by the Fire Marshal.]

B Wiring methods shall comply with requirements of Section 26 05 00. Exposed wiring is not permitted in finished spaces [except in existing construction where wiring cannot be fished]. Wiring shall be dedicated to the fire alarm system consistently color coded per shop drawings. Wiring shall not share conduits with other systems.

C. Coordinate quantity, location, and access for duct smoke detectors and sampling tubes with Division 23 Contractor. Furnish sampling tube/detector housing assemblies for installation by ductwork installer. Do not locate sampling tubes

less than 6 duct widths from return air inlet, bend in duct, or other obstruction in duct. Locate sampling tube/detector housing assemblies for smoke dampers on the damper housing where recommended by smoke damper manufacturer.

D. Do not locate detectors within 4 feet of HVAC supply and return registers and not in a direct airflow. Do not locate detectors within 1 foot of light fixtures.

E. Provide recessed backboxes for semi-flush installation of devices where construction permits, otherwise provide surface boxes.

F. Mounting Heights: Install wall mounted equipment and devices, measured to center of device above finished floor, unless otherwise indicated on shop drawings approved by the Authority Having Jurisdiction (AHJ).

Manual Stations	48 inches to top
Alarm Signaling Devices and Remote Alarm Lights	80 inches to bottom
Remote Annunciator and Graphic Plaques	60 inches to bottom

G. Detectors shall not be installed until finish work and construction clean up of all trades is complete, and area is ready for occupancy. [For remodel areas, provide dust protection for existing installed detectors during construction and clean up.]

H. Provide 24 volt DC power to electro-magnetic door holders and door closers with electric hold open. Mount outlet box for electro-magnetic door holder to withstand 80 pounds pulling force.

I. Fire Protection Monitoring and Signal Power: Provide addressable interface modules, conduit, wire and connections to fire sprinkler flow switches, sprinkler valve tamper switches, pressure switches, electric sprinkler alarm bell, kitchen hood fire dampers, and to kitchen hood extinguishing system alarm contacts. Include 24 VDC power for sprinkler alarm bell furnished under Section 21 10 00. Coordinate number and location of alarm and supervisory connections with fire protection shop drawings.

J. Elevator Recall and Power Shut Down Warning: Provide SLC control modules at each elevator controller for fire alarm output interface. One control contact each is required for designated recall level, alternate recall level, and power shut down warning. Program SLC relay operation for recall and warning functions as directed by elevator contractor based on alarm inputs from associated smoke detectors located in machine room, top of elevator shaft (if provided), and each elevator lobby.

K. Smoke Control: Provide conduit, wire, interface relay, and connection to smoke dampers and to motor controllers of pressurization and/or exhaust fans. Include addressable interface modules where required.

L. Fan Shut-Down: Provide conduit, wire, relays and connection for shutdown of air moving equipment rated over 2000 cfm per IMC Section 606. Final connection to HVAC equipment with integral motor controls shall be provided under Division 25.

M. High Volume Low Speed (HVLS) Fan Shutdown: Provide conduit, wire, relays and connection for shutdown of paddle fans 6 feet in diameter and larger upon sprinkler water flow alarm per NFPA 13 Section.

N. Adjust sensitivity for each smoke detector based on the application and type of space being protected as recommended by the product installation instructions.

O. SLC Interface: Provide addressable interface modules for all non-addressable initiating devices and equipment furnished under other sections.

P. Provide 24 volt DC power to fire door releasing devices unless otherwise indicated. Provide wiring to initiate release upon activation of the smoke detection located adjacent to the door opening.

Q. Primary Power Supply: Provided dedicated branch circuit(s) for fire alarm control, transmitter, and NAC auxiliary power supplies. The location of the circuit disconnecting means shall be permanently identified at each cabinet. Where the circuit disconnecting means is located at the panelboard branch circuit breaker, provide a red pad locking attachment.

R. Wireless Transmitter: Locate and install wireless transmitter in vicinity of the Fire Alarm Control Panel (FACP) as approved by the Fire Marshal. Provide required wiring and connections between the FACP communicator and the transmitter for addressable alarm, trouble, and supervisory transmission. Where wireless signal strength is not sufficient for use of an integral antenna at the transmitter, install a remote antenna at an Architect/Engineer approved location as required.

S. Alarm speakers: Adjust speaker taps meet decibel and intelligibility requirements of NFPA. Connect speakers for 70 volt operation. Add addition speakers where required by Fire Marshal.]

T. TVSS: Provide transient voltage surge protection on each outside plant fire alarm system signaling, notification, initiating, and control/interface circuit. Locate TVSS with 15 feet of the fire alarm control panel for dedicated inter-building circuit home runs. Locate TVSS within 15 feet of building entrance for indoor circuits extending outdoors (e.g. PIV tamper). Bond TVSS to the building grounding electrode system using #10 AWG minimum copper ground conductor.

U. Pathway Identification: j-boxes, outlets and condulet covers shall be identified red in color. Conduit in accessible attic and ceiling spaces, and where surface mount in electrical, telecomm and mechanical spaces, shall be identified red in color every 8 feet or fraction thereof, along its length.

3.4 TESTING

A. Test system in accordance with NFPA 72 and Fire Marshal requirements.

B. During testing verify device address descriptions match device type, location description, and zoning assignments shown on record drawings. Submit address log and correction report and confidence test report with record drawings.

3.5 DEMONSTRATION AND INSTRUCTIONS

A. Demonstrate operation, maintenance and programming of system to Owner's personnel prior to Contract Closeout. Allow one four hour session scheduled at convenience of Owner.

B. Use operation and maintenance manuals as basis of instruction. Review contents of manual with personnel in detail to explain all aspects of operation and maintenance.

C. Demonstrate operation, control, trouble shooting, maintenance, and testing of system.

END OF SECTION

SECTION 32 31 13 – CHAIN LINK FENCES AND GATES

PART 1 - GENERAL

1.1 REFERENCES

A. ASTM International (ASTM).
   1. A 392 - "Specification for Zinc-Coated Steel Chain-Link Fence Fabric."
   2. F 1083 - "Specification for Pipe, Steel, Hot-Dipped Zinc Coated (Galvanized) Welded, for Fence Structures."

1.2 SUBMITTALS

A. Shop Drawings: Show fabrication and manufacturer's installation instructions, and details.

PART 2 - PRODUCTS

2.1 MANUFACTURERS

A. Cyclone Fence; Anchor Fence, Inc.; or approved.

2.2 MATERIALS

A. Fabric: Zinc-coated steel, ASTM A 392, 9 gage wire, 2 inch mesh, one piece fabric widths, knuckled at both selvages.

B. Steel Pipe: ASTM F 1083, standard weight galvanized pipe.
   1. Line Posts: 2.375 inch O.D. fence up to 6 feet high; 2.874 inch O.D., fence over 6 feet high.
   2. End, Corner, Pull, and Terminal Posts: 2-7/8 inch O.D. fence up to 6 feet high; 3 inch O.D. fence over 6 feet high.
   3. Top and Center Rails: 1.660 inch O.D.
   4. Post Bracing: 1.680 inch O.D.
   5. Gate Posts: 2.875 inch O.D. leaves up to 6 feet, 4 inch O.D. leaves over 6 feet and up to 13 feet.
   6. Gate Frame: 1.90 inch O.D. tubular shaped with welded or steel fitted corners.

C. Tie Wire: 11 gage galvanized steel.

D. Privacy Slats: Fiberglass reinforced plastic type, color to be selected.

E. Accessories: Manufacturer's standard galvanized pressed steel or malleable iron.
   1. Post Tops: Designed as a weather tight closure cap for each type of post. Match post finish. Provide for passage of top rail with set screw retainer, as required,
   2. Gate Hinges: Non-lift-off type offset to permit 180 degree opening. Provide number and size of sufficient strength to support gate size.
   3. Gate Latches: Forked type with gravity drop; center gate stop and drop rod. Permit operation from either side. Provide padlock eye as integral part of latch.

2.3 FABRICATION

A. Fabricate swinging gates in accordance with manufacturer's standards, reviewed Shop Drawings, and as shown and specified.
   1. Fabricate with same frame and fabric as fence. Provide vertical, horizontal, and diagonal brace members as required for gate size and operation.

PART 3 - EXECUTION

3.1 INSTALLATION

A. Install fences and gates in accordance with manufacturer's instructions and reviewed Shop Drawings.

B. Provide line and terminal posts of sufficient length to allow for 36 inch settings into concrete footings.

C. Footing Diameters: 10 inch for line posts, and 12 inch for terminal posts.

D. Space line posts at 10 feet maximum on centers.

E. Set posts vertical and plumb in concrete footings. At gate posts extend footing to underside of bottom hinge.

F. Install tension wires prior to stretching fabric.

G. Fabric:
   1. Leave 2 inches between bottom of fabric and finished grade.
   2. Pull fabric taut and tie to posts, rails, and tension wires.
   3. Install on security side of fence, anchor to framework such that fabric remains in tension after pulling force is released.

H. Install fabric tie wire at 24 inches maximum on centers.

I. Fence heights as shown or noted.

J. Provide center rails at terminations and gates.

K. Install gates plumb, level, and secure for full opening without interference. Adjust hardware for smooth operation, lubricate where necessary.

END OF SECTION

SECTION 32 84 00 - IRRIGATION

PART 1 GENERAL

1.1 EXTENT OF WORK IN THIS SECTION

This Section includes piping, valves, and quick couplers for modified temporary, irrigation system.

1.2 RELATED SECTIONS

A. Earthwork: Section 31-0100

B. Site Clearing: Section 31-1100

C. Turf & Grasses: Section 32-9200

D. Exterior Plants: Section 32-9300

1.3 DEFINITIONS

A. Mainline: Piping downstream from irrigation point of connection (shut off valve & double check valve assembly) to quick couplers or drain valves. Piping is under constant pressure.

B. Lateral line: Piping downstream from quick couplers and drain valves. Piping is not under constant pressure and is not part of this contract.

1.4 SUBMITTALS

A. Materials List: Within 30 days after award of Contract, and before any irrigation system are delivered to the job site, submit to the Owner's Representative a complete list of all irrigation system materials proposed to be furnished and installed. Submit catalog data, including manufacture's name and catalog number, model number, specifications, brochures, or other data giving complete information about each item.

B. Tools: Submit to the Owner two sets each, as appropriate, of controller keys, quick coupler operating keys with hose swivels, gate valve keys, valve box keys, wrenches for removal and adjustment of type of quick couplers, and unique tools or devised needed to access, operate , adjust or maintain the system. Submit at time of final examination for irrigation system.

C. Guide Manuals: Operations and Maintenance Manuals: It shall be the responsibility of the Contractor to identify any and all maintenance requirements that will affect proper function of the temporary irritation system. Instructions for system weatherization are to be included. Maintenance tasks shall be submitted in writing to the Architect at time of substantial completion and shall identify

special needs, time requirements, and duration of maintenance to the Owner.

D. Irrigation schedule: Submit 8.5 inches x 11 inches copies of an irrigation schedule. On the schedule, indicate the day(s) of the week each area is watered, and duration each area/zone is watered (in minutes) in order to sustain plant and lawn health and vigor.

E. Testing Certificates: Submit Certification of backflow device and Hydrostatic pressure test of mainline piping to zone control/isolation valves.

1.5 QUALITY ASSURANCE

A. Provide at least one person who shall be present at all times during execution of this portion of the Work, and who is thoroughly familiar with the type of materials being installed and the manufacture's recommend methods of installation, and who shall direct all work performed under this Section.

B. Except where more stringent requirements area specified, conform to the "Uniform Plumbing Code" as adopted and modified by the State of Washington and all legally constituted authorities having jurisdiction. If more restrictive than those specified herein, notify Owner's Representative prior to starting work.

C. All materials and equipment in the system to be new and be brands and types as shown in the Drawings or as specified herein, or as accepted by the Owner's Representative.

1.6 DELIVERY, STORAGE, AND HANDLING

A. Deliver piping with factory-applied end caps. Maintain end caps through shipping, storage, and handling to prevent pipe-end damage and to prevent entrance of dirt, debris, and moisture.

B. Use all means necessary to protect irrigation system materials from damage, theft and vandalism before, during, and after installation.

C. In the event of damage, immediately make all repairs and replacements necessary to the satisfaction of the Owner's Representative, and at no additional cost to the Owner.

1.7 PROJECT CONDITIONS

A. Meet with Owner's Representative and Owner's maintenance staff on site to review scope of Work prior to installing any parts of the system and connection to existing irrigation system.

B. Interruption of Existing Water Service: Do not interrupt water service to facilities occupied by Owner or others unless permitted under the following conditions and then only after arranging to provide temporary water service according to requirements indicated:
   1. Notify Owner's Representative no fewer than three days in advance of proposed interruption of water service.

2. Do not proceed with interruption of water service without written permission of the Owner's Representative.

C. Locate and identify, with visible marking, existing underground utilities in the areas of work. Call Northwest Utility Notification Center (800) 424-5555. If utilities are to remain in place, provide adequate means of protection during excavation operations.

D. Should uncharted piping or other utilities be encountered during excavation, consult the utility owner immediately for directions. Cooperate with the owner and public and private utility companies in keeping their respective services and facilities in operation. Repair damaged utilities to the satisfaction of the utility owner. The cost of repairing charted utilities shall be paid by the Contractor at no additional cost to the Owner.

E. Protect buildings, equipment, utilities, sidewalks, paving, reference points, monuments, and markers on site. Take extreme caution when trenching at adjacent to aggregate base courses, sand-set unit pavers and around existing trees and their root systems. No root cutting is allowed without prior approval. Protect adjacent properties. Protect work by others. Replace or repair damaged items at no cost to the Owner and to the approval of the Owner's Representative.

F. Coordinate with other trades affecting or affected by Work of this Section.

1.8 WARRANTY

A. Warranty work and materials in writing for one year from the date of final acceptance (Landscape Substantial Completion), against defective workmanship and materials. All failures in workmanship or materials will be repaired at no additional cost to the Owner immediately after notification by the Owner's Representative

B. Contractor shall be responsible for maintaining system and protecting it from all damage until date of Final Acceptance at no additional cost to Owner. This shall include damage caused by vandalism or adverse weather conditions.

1.9 ONE-YEAR CORRECTION PERIOD

A. Repair any settling of backfilled trenches occurring during the one-year correction period at no additional cost to Owner. Include complete restoration of all damaged planting, pavement, and or other improvements of any kind.

1.10 SYSTEM COVERAGE

A. The watering system shall be designed as extension of the existing irrigation system. MP rotor head sprinklers shall be controlled (timer) operated from the proposed control panel. Replace existing control panel and connect existing and new wires as necessary. Watering using modified low flow, temporary irrigation emitters or Jet-spray heads or pre-drilled drip lines is not acceptable. It is anticipated that Landscape Contractor will exercise professional judgment in

location, height, sprinklers (rotor heads) and downstream temporary irrigation components without measurably changing the system design. No changes shall be made in the system design without the prior approval of Landscape Architect and owner's maintenance representative.

B. The lawn watering system shall be designed to allow large radius rotor head connections to controlled (timer) operated independently of landscape beds. Watering using modified low flow, temporary irrigation emitters or Jet-spray heads or pre-drilled drip lines is not acceptable. It is anticipated that Landscape Contractor will exercise professional judgment in location, height irrigation components without measurably changing the system design. No changes shall be made in the system design without the prior approval of Landscape Architect and owner's maintenance representative.

1.11 SYSTEM FAMILIARZATION

A. Upon acceptance of the system by Owner's Representative, Contractor shall provide necessary keys and other tools necessary to operate, drain, and activate the system. Contractor shall train Owner's maintenance personnel and provide written instructions to ensure that the system operation, maintenance, and winterizing can continue after departure of the Contractor. Contractor will be liable for all damages or losses resulting from failure to comply with the provisions of this Article.

PART 2 PRODUCTS

2.1 PIPES, TUBES AND FITTINGS

A. Steel Pipe: ASTM A-53, Schedule 40, Type S or E, Grade A or B, galvanized with threaded ends.
   1. Steel Pipe Nipples: ASTM A-733, made of ASTM A-53, or ASTM A-106, Schedule 40, galvanized, seamless pipe with threaded ends.
   2. Malleable-Iron Unions: ASME B16.39, Class 150, hexagonal-stock body with ball-and-socket, metal-to-metal, bronze seating surface, and female threaded ends.
   3. Gray-Iron Threaded Fittings: ASME B16.4, Class 125, galvanized, standard pattern.
   4. Cast-Iron Flanges: ASME B16.1, Class 125.
   5. Cast-Iron Flanged Fittings: ASME B16.1, Class 125, galvanized.

B. Hard Copper Tube: ASTM B 88, Type K, water tube, drawn temper.
   1. Copper Pressure Fittings: ASME B16.18, cast-copper-alloy or ASME B16.22, wrought-copper solder-joint fittings. Furnish wrought-copper fittings if indicated.
   2. Copper Unions: MSS SP-123, cast-copper-alloy, hexagonal-stock body, with ball-and- socket, metal-to-metal seating surfaces and solder-joint or threaded ends.

C. Brass Pipe: ASTM B584 Alloy C84400 Standard Specification for copper alloy sand casting for general applications:

1. Brass Pipe Nipples: ASTM B-43, seamless red brass pipe with threaded ends.
2. Brass Pipe Fittings: ANSI B16.15 cast copper alloy threaded fittings.
3. Brass Unions: ANSI B16-15, Federal Specification WW-U-516 for Type III, Class A and Class B cast copper alloy threaded unions.

D. PVC Pipe, General:
1. Material used in the manufacture of the pipe shall be domestically produced rigid PVC 1120 compound, Type I Grade I, with Cell Classification of 12454 as defined in ASTM D-1784.
2. Pipe shall continuously bear the National Sanitation Foundation seal of approval for potable water usage and comply with the following requirements for product marking ASTM D-2241, D-1785 and D-2665 as applicable. Markings shall include: manufactures name, nominal pipe size; outsize diameter system, material designation code; applicable Standard thermoplastic pipe Dimension Ratio designation code (SDR number) or pipe schedule, and corresponding pressure rating in PSI for water at 73 degrees Fahrenheit.
3. Belled-end pipe shall have tapered sockets to create an interference-type fit, which meet or exceed the dimensional requirements and the minimum socket length for pressure-type sockets as defined in ASTM D-2672.
4. Pipe sizes ½ inch and 1-1/4 inch are not allowed.

E. PVC Mainline: ASTM D-1785, Schedule 40.

F. PVC Lateral Line, Pressure-Rated Pipe, ASTM D-2241, SDR 21, 200 PSI minimum ASTM D- 1785, Schedule 40.

G. PVC Nipples and Fittings:
1. PVC Socket Fittings, Schedule 40: ASTM D-2466; and Schedule 80: ASTM D 2467.
2. PVC Pipe Nipples: ASTM D-1785, PVC 1120 compound, schedule 80.
3. PVC Threaded Fittings, Schedule 80. ASTM D2464, pressure.
4. PVC Threaded Fittings, Schedule 40: ASTM D-2466, non-pressure.

J. Sleeves: PVC pipe under all paving, sized to accommodate required sizes and numbers of pipes and wires, 4-inch minimum diameter, in no case less than twice the diameter of the pipe being sleeved.
1. Schedule 40 PVC, ASTM D-1785 or Plastic Sewer Pipe ASTM D-3034, SDR-35, PVC conforming to ASTM D-1784, N.S.F. approved pipe.

2.2 JOINING MATERIALS

A. Copper Pipe Solder:
1. Silver solder, 45 percent silver, 15 percent copper, 16 percent, zinc, 24 percent cadmium and solidus at 1125 degrees Fahrenheit, and liquids at 1145 degrees Fahrenheit; conforming to ASTM B206-52T and Federal Specification QQB 00655.

B. Pipe Solvent Cement:
1. PVC Solvent Cement ASTM D-2564.

2. 'Weld-On' I.P.S. 705 for pipe sizes up to 2 inch diameter.
3. 'Weld-On' I.P.S. 711 cement with P70 primer for pipe sizes 2-1/2 inches and larger.

C. PVC Primer
1. 'Weld-On' I.P.S. P-70, ASTM F-656

D. PVC Cleaner:
1. 'Weld-on' I.P.S. C-65, SCAQMD 1168, Low V.O.C.

E. Field assembled Swing Joints:
1. For Rotors and Quick Couplers: Schedule 40 PVC fittings and Schedule 80 PVC nipples required. Size to match inlet size of quick coupler. Use is acceptable for all flows.

F. Pre-fabricated Swing Joint Assemblies:
1. Class 315 PVC construction with leak-proof "O-ring" seals. Size to match inlet size of quick coupler. Use for flows greater than 4 gpm. Length as required. Lasco tripe swing joint or equal.
2. Flexible PE swing pipe flexible riser assembly: Minimum 18-inch length polyethylene piping with black Marlex spiral barb fittings. Use for flows under 4 gpm. RainBird swing assemblies or equal.

2.3 GENERAL-DUTY VALVES

A. Double check valve assembly: Washington State Health Department Approved double check valve assembly, Wilkins Model 350 or equal.

B. Shut-off Valve (Point-of-Connection): Bronze Gate Valve; MSS SP-80, Type 2, Class 125; 200 PSI CWP Rating ; ASTM B 62 bronze body material with integral seat and screw-in bonnet; threaded ends; nonrising bronze stem; solid wedge; bronze disc, asbestos free Packing.
1. Wilkens Brass Angle with cross handle for keyed use; or equal.
2. Size same as pipe on which it is installed.

C. Isolation Valve (Mainline as needed): Full port ball valve with threaded ends, minimum 400 PSI CWP rating, forged brass and cast bronze bodies and end pieces RPTFE seats and seals, blow- out proof stem design, chrome-plated brass ball, with stainless steel handle, 'Apollo' 70 Series of equal. Size same as pipe on which it is installed.
1. Valves 2-inches and smaller shall be equipped with stainless steel tee handle and nut; and 2- 1/2-inch valves shall be equipped with stainless steel lever and nut.

D. Drain Valves (Mainline Drain Valves): bronze, angle-pattern, globe valve with screw-in bonnet, integral seat, 200 PSI CWP rating, conforming to MSS SP-80: 'Nibco' T-311-Y or equal, 1 inch minimum.

2.4 SPECIALITY VALVES

A. Quick Coupling Valve: Two-piece brass body, [3/4-inch with-inch double-track

key lug] 1-inch with locking yellow [purple] rubber cover, corresponding key and swivel hose ell. Provide with stabilizing wing. RainBird 44-LRC[NP]; Buckner QB44RC [NP]; or equal.

B. Combination Air Release and Air and Vaccum Release Valve: Size and type as necessary.

2.5 VALVE BOXES AND VAULTS

A. Valve Boxes: HDPE plastic boxes. 'Carson Brooks, 'Pentek', 'RainBird' or equal, with tee-style locking top and 6-inch extensions to facilitate required depth of installation where applicable. Lids shall be green unless otherwise noted.
1. Quick couplers shall be installed in 10-inch round valve boxes.
2. Drain valves shall be installed in 5-1/4 inches round adjustable valve boxes.
3. Grounding rods shall be installed in 7-inch round valve boxes with black covers.
4. Flow meters shall be installed in standard valve boxes
5. Air Release Valves][Air and Vacuum Valves, Combination Air Release and Air and Vacuum Release Valves shall be installed in jumbo boxes with black covers.
6. Water Hammer Arrestor: Shall be installed in a [24-inch x 24-inch x 24-inch deep].

B. Valve Box and Vault Accessories
1. Stainless steel 'penta' bolts for bolt-down covers.
2. Drain Rock: ¾ inch to ¼ inch clean and washed pea gravel, no fines.
3. Filter Fabric: Woven or non-woven geotextile for use in separating drain rock from subgrade in valve box and vault installations while providing adequate drainage.
4. Brick or Concrete Block Supports: (2)-4-inch by 8-inch by 4-inch bricks or (1) 8-inch by 8- inch by 4-inch concrete paver at each corner of valve box.

2.6 OTHER MATERIAL

A. Identification Markers:
1. Detectable Warning Tape: Minimum 3-inch wide, 5 mils thick inert plastic tape with continuous layer of aluminum foil encased in the plastic. Tape identification shall match the utility being marked on all mainline. 'Terra Tape' Detectable, or equal.
2. Valve Identification Tags: Polyurethane tag with integral attachment neck and reinforced attachment hole. Tag shall be hot stamped alphanumeric lettering 1-1/8 inches in height. Christy (T. Christy Enterprises) or equal.

B. Quick Coupler Stabilizing Wing: Polyester-coated ductile-iron, with stainless steel bolt; Leemco or equal.

C. Concrete for Thrust Blocking: All concrete for thrust blocks shall achieve minimum strength of 3000 PSI at 28 days.

D. Drainage Backfill: Cleaned gravel or crushed stone, open graded from 1 inch to

½ inch minimum.

E. Bedding Sand: Clean, crushed or naturally occurring rive sand with no particle size larger than 1.4 inch, and no more than 6 percent passing the No. 200 sieve.

F. All other materials not specifically described but required for a modified, quick coupler, temporary irrigation system installation shall be new, first quality of their respective kinds, and subject to approval.

PART 3 EXECUTION

3.1 GENERAL

A. Prior to all work of this section, carefully examine the installed work of all other trades and verify that all such work in complete to the point where this installation may properly commence.

B. Verify that irrigation system may be installed in strict accordance with all pertinent codes and regulations, the original design, the referenced standards, and the manufacturer's recommendations.

C. In the event of discrepancy, immediately notify the Owner's Representative. Do not proceed with installation in areas of discrepancy until all such discrepancies have been fully resolved. Start of work denotes acceptance.

D. Install materials and equipment in strict accordance with manufacturer's written specifications and recommendations and all applicable codes.

E. Provide protection at all times to keep rock, dirt, gravel, debris, and all other foreign materials from entering piping, vales, and other irrigation equipment.

3.2 LAYOUT

A. Make all necessary measurements in the field to ensure precise fit of items in accordance with the original design.

B. Layout to follow as closely as practicable the design as shown on the Drawings. Stake out locations of all proposed equipment for acceptance by Owner's Representative, prior to trenching.

C. System shall meet minimum pressure at each quick coupler as shown on drawings. Notify Owner's Representative immediately if any modification of piping layout will be required to accomplish this. Do not proceed until layout has been verified in the field with the Owner's Representative.

D. Follow pipe layout plan making modifications as necessary to avoid trenching through roots of existing trees or other obstructions. Take care in protecting all existing tree root zones.

E. All valve boxes shall be located in shrub or ground cover beds. Mainline shall be run 24 inches from the edge of paving, or in lawn areas 24 inches from the

edge of the adjacent shrub or groundcover bed.

3.3 WATER SOURCE

A. Connect system as indicated on Drawings. Make arrangements with the Owner for water shut- off, if necessary.

3.4 TRENCHING

A. Refer to 31 Section “Earthwork”: for excavating and trenching.

B. Located existing utilities. Trench along routes as described herein.

C. Trenches to be straight and true of conform to adjacent curved edges, with bottom uniformly sloped at a minimum 1 percent.

D. Provide minimum cover over top of underground piping according to the following:
1. Irrigation Mainline Piping: Minimum depth of 24 inches below finished grade, or not less than 18 inches below average local frost depth, whichever is deeper.
2. Drain Piping: 18 inches.
3. Sleeves: 24 inches under paving; 36 inches under roads.

E. Keep trenches free of pipe-damaging rocks and debris.

F. Trench to be 12 inches wide minimum and wide enough to allow all pipes to lie side by side with 6-inch minimum separation between pipes.

G. Install warning tape directly above pressure piping, 12 inches below finished grades, except 6 inches below subgrade under pavement and slabs.

3.5 PIPE

A. Do not use solvent cement on threaded joints. Wrap joints with minimum three wraps or Teflon tape.

B. Ensure that the inside of the pipe remains absolutely clean. Pipe ends shall be protected and not left open. Removal all foreign matter and dirt from inside of pipe before lowering into trench.

C. Lay pipe in accordance with standard practices, on solid foundation, uniformly sloped, substantially supported at all locations. “Snake” pipe slightly from side to side in trench to allow for expansion and contraction. Keep pipe markings visible.

D. PVC pipe joints to be solvent welded except as indicated on the Drawings. Cut pipes square, deburr, wipe from surface all saw chips, dust, dirt, moisture and all foreign matter which may contaminate the cemented joint. Clean pipe with pipe cleaner to remove dirt, oil and grease. Apply primer and solvent cement.

Make joints in accordance with manufacturer's recommendations.

E. For 90-degree turns in mainline pipe, install two 45-degree fittings.

F. For non-standard angles and bends, install double fittings to avoid stressing the pipe or fittings.

G. Underground lines shall have a minimum horizontal and vertical clearance of 12 inches from other utility lines. For lines crossing at angles from 45 degrees to 90 degrees with each other, maintain 6-inch vertical clearance. No line shall be installed parallel to and directly over another line.

H. Provide 6 inches clearance between pipes. Do not stack pipe unless accepted by Owner's Representative to avoid tree roots.

I. Do no solvent welding of pipe when raining or when temperature is below 40 degrees Fahrenheit.

J. No fittings are to be closer than 6 inches apart.

K. Obtain tight, inseparable joints. Allow 24-hour curing before testing.

L. Install concrete thrust blocks at all changes of direction for mainline pipe 2-1/2 inch or greater in diameter. Place a minimum of 1 cubic foot of fully mixed concrete against the pipe and firm undisturbed soil in accordance with the pipe manufacturer's recommendations.

3.6 IRRIGATION SLEEVES

A. Install piping and wiring in sleeves under sidewalks, roadways, and parking lots.
   1. Install piping sleeves by boring or jacking under existing paving if possible.

B. Install separate sleeves for irrigation lines and control wires under pavement prior to placing pavement materials wherever possible.

C. Extend sleeves beyond pavement edge a minimum of 12 inches. Install sleeves with minimum 24 inches depth of cover to the top of the pipe.

D. If length of required sleeve is greater than the length of the unit of pipe, solvent weld joints. Otherwise all sleeves shall be of one continuous length of pipe.

E. Tape ends of sleeve closed to keep soil out of the sleeve until irrigation lines and control wire are installed.

F. Permanently attach a single length of 14 gauge trace wire above the entire length of the sleeve.

G. Stake both ends of sleeves with a readily visible stake extended 12 inches above-grade and below-grade to the bottom of the sleeve. Mark the above-grade portion of the stake with the words "Irrig. Sleeve". Remove stakes after

sleeves are recorded on As-Built Drawings and after irrigation lines and control wires are installed and accepted by Owner's Representative.

H. Drive an 18-inch rebar stake above sleeve end locations and wrap trace wire around stake.

3.7 VALVES

A. General:
1. Install valve boxes plumb to grade in a neat and uniform pattern per manufacturer's directions, and as shown on the Drawings.
2. Coordinate valve box locations to avoid conflicts with plant locations.
3. Install valve with 3 inch of clearance between top of valve and underside of valve box cover, and with 3 inches minimum clearance between the valve assembly and all sides of the box.
4. Valve boxes shall not rest directly on pipe.
5. Install 1 cubic foot of drain rock in the bottom of all valves boxes.
6. Provide 1-inch clearance between bottom of valve assembly and top of drain rock.
7. Thoroughly flush supply lines before installing valves.

B. Master Valves:
1. Thoroughly flush the mainline prior to installation of master valves. Install per manufacturer's directions and as shown on the Drawings. Place in specified vault with adequate clearance for servicing.

C. Drain Valves:
1. Install manual drain valves at low points along mainline to ensure complete gravity drainage of all mainlines. Provide required number of drain valves at no additional costs to the Owner.
2. Install one drain valve in vault immediately downstream of point of connection.
3. Pipe drain valves into approved drainage structures. Install drain piping with minimum of 18 inches of cover to top of pipe.
4. Drain Pocket: Where no drainage structures exist, excavate [1] cubic yard of soil material at discharge to drain valves. Backfill with drainage backfill to 12 inches below grade. Wrap drainage backfill with drainage fabric and backfill remainder with amended topsoil.

D. Quick Coupling Valves:
a. Provide schedule 80 PVC threaded nipples and fittings at quick coupler and ball valves.
b. Install quick coupler valves as shown on landscape plan/drawing.
c. Stabilize quick coupler nipple with one 24 inch quick coupler stabilizing wing. Attach stake to nipple with 1/2 –inch stainless steel worm drive hose clamps.

E. Isolation Valves: Install isolation valves along mainline at all points-of-connection and upstream of all road and drive aisle crossings. Install plumb to grade in a neat and uniform pattern as per manufacturer's directions, and as shown on Drawings.

F. Combination Air Release and Air and Vacuum Release Valves: Install at high points along the mainline necessary. Install below grade in vault.

3.10 FLUSHING

A. Flush lines with water for a minimum of 5 minutes each zone prior to installation of quick coupler.

B. Cap risers immediately after flushing.

3.11 LABELING AND IDENTIFYING

A. Equipment Nameplates and Signs: Where there is more than one controller on the Project, install engraved plastic-laminate equipment nameplates and signs on each automatic controller.

B. Install valve identification tags on each automatic control valve per manufacturer's recommendations.

C. Install control wire numbering labels on each control wire to correspond with the valve station number at both ends of the control wires. Label spare and trace wires.

D. Warning Tapes: Arrange for installation of continuous, underground, detectable warning tape over underground piping, during backfilling of trenches.

3.12 TRACE WIRE

A. Place one strand of trace wire for all mainlines, and leave end at point of connection location. Tape wire to top of mainline at no less than 36 inch intervals. All trace wire shall be spliced together with water-tight splice connectors.

B. Run a 12-inch loop of trace wire into each valve box for each detection.

3.13 PRESSURE TESTING

A. Notify the Owner's Representative five days before pressure testing.

B. Backfill trenches sufficiently to ensure the stability of pipe, leaving joints exposed.

C. Mainline and lateral lines may be tested at different times to allow isolation of either

D. Supply certified pressure gauge and force pump during tests.

E. Mainline Testing:
1. Thoroughly flush piping before testing. Cap all fittings on mainline fill with water. Do not install remote control valves prior to mainline pressure testing.

2. Test mainlines to control valves at 100 PSI for 1 hour. If pressure loss occurs, inspect the entire system, make water-tight, and retest until no pressure loss occurs for the testing period.
3. Pressure test must show no pressure loss for the specified period and be accepted by the Owner's Representative before backfill of trenches will be allowed.

F. Lateral Line Testing:
1. Thoroughly flush piping before testing. Cap all fittings on lateral lines and fill with water.
2. Adjust bleed screws to open remote control valves to allow a downstream pressure of 100 PSI. Use motorized air compressor as need to achieve pressure.
3. Maintain 100 PSI pressure for 1 hour before and during observation by Owner's Representative without the aid of air compressor.
4. Installation may not leak or lose pressure during test period.
5. Detect and repair leaks and retest system until acceptance is granted.
6. Thoroughly flush piping before testing and installation of quick couplers.

3.14 BACKFILLING

A. Refer to Division 31 Section "Earth Moving" for backfilling.

B. Delay backfilling until piping is pressure tested and accepted.

C. Place clean sand or approved backfill 3 inches below and 6 inches above all pipe. Fill the rest of the trench with approved material, free of rocks and debris capable of damaging pipe. Compact to adjacent soil density in 6 inches lifts.

D. Stones larger than 1-inch diameter are not allowed in backfill material.

E. Place metallic locating tape in all mainline trenches in accordance with manufacturer's instructions.

F. Fill mainline with water at approximately 25 PSI during backfilling operations.

3.15 FIELD QUALITY CONTROL

A. Backflow Preventer Testing: Contractor shall insure backflow preventer has been tested and verified for proper operation prior to re-operation.
1. Original copies of the certification shall be submitted to the Owner.
2. Backflow preventers shall be labeled with plastic laminated field history tag showing date and tester information.

B. Irrigation Test:
1. The test procedure will be conducted by the Landscape Contractor with Owner's Representative present.
2. Prior to the test, make all required adjustments to the irrigation systems. Test the system to assure that all quick couplers are complete.
3. When the irrigation system is completed, but prior to planting, perform a test in the presence of the Owner's Representative to determine if the

irrigation for all planting areas is complete and adequate. Notify the Owner's Representative 48 hours in advance for the irrigation coverage test.

4. Furnish all materials and perform all work required to correct any inadequacies, to the complete satisfaction of the Owner's Representative. This shall include any changes affecting the quick coupler system due to any deviation from plans.
5. Provide a minimum of two working individuals for the duration of each test. Each individual provided by the contractor must have a two-way communication device for proper manipulation of the control valve sequencing of the irrigation system during the coverage test procedure. The lead individual must be a representative from the installing contractor's company. During the irrigation test, bring keys to unlock cabinets and valve boxes. Open all controller cabinets, enclosures, valve boxes which are part of the irrigation system.
6. One return site observation shall be provided by the Owner's Representative to determine whether the items listed in the first site observation have been corrected. After making the corrections noted in the Field Observation Report, notify the Owner's Representative at least 48 hours in advance, and perform another test in the presence of the Owner's Representative for approval.
7. If the items have not been fully corrected or repaired to the complete satisfaction of the Owner's Representative, and as noted in the first Field Observation, the contractor must reschedule another field observation and shall bear all financial responsibility to reimburse the Owner for all cost incurred by the Owner's Representative for the failed field observation performed.
8. Any item listed in the Field Observation requiring action that is not considered to be part of the original contract, must immediately be brought to the attention of the Owner. This shall be the responsibility of the contractor and must be done in a manner as to enable the contractor to correct the item prior to the next field observation.
9. Upon completion of each phase of work, the entire system shall be tested and adjusted to meet site specifications.

3.17 STARTUP SERVICE

A. Verify that all associated components are installed and connected according to the Contract Documents and are functioning properly.

B. Complete startup checks according to manufacturer's written instructions.

3.18 CLEANUP

A. Remove debris from project site upon completion or sooner, if directed.

3.19 FINAL INSPECTION

A. Thoroughly flush, clean, adjust, and balance the entire irrigation system for efficient operation. Upon 5 days written notice, demonstrate the entire system to

the Owner's Representative, proving that all valves are properly operating and that the installed system is workable, clean, and efficient.

B. Contractor to deliver to the Owner the items scheduled for submittal at the time of the final inspection for irrigation.

C. Upon completion of the installation, turn in a list of each part with appropriate part number (for ordering replacement products) and local supply store of where these parts can be purchased:

3.20 WARRANTY

A. The warranty period related to all products, materials, and workmanship will begin on the date of final acceptance of the work and extend for the period of one year.

B. The Contractor must repair or replace all defective materials and workmanship during the warranty period. The conditions of the warranty apply to all replacement material and repair work from the date such materials are installed or repair work done.

3.21 ADDITONAL REQUIREMENTS

A. Provide Owner's Maintenance Personnel with system familiarization and 2 hours minimum of instruction in maintenance and operation of each piece of equipment installed.

B. Repair settling trenches. Include complete restoration of plantings, mulch, grades, pavements or other improvements.

C. Fall Winterizing Visit: Return to the job site at the beginning of the first winter season to perform a general inspection of the system, test all valves, lines, quick couplers, vacuum breakers, repair all leaks and faulty work, check operation of the system, drain system, show maintenance staff location of all drain valves and blow out points and restore all areas where trenches have settled.

D. Spring Start-up Visit: Return in spring after the first winter season for system check and if necessary, restore system for spring and summer operation. Explain system and operation methods to maintenance staff. Restore all areas where trenches have settled.

END OF SECTION

SECTION 32 92 00 – TURF & GRASSES

PART 1 GENERAL

1.1 EXTENT OF WORK IN THIS SECTION

A. Section Includes:
   a. Planting of seeded lawn
   b. Installation of sod
   c. Cleanup and maintenance

1.2 RELATED DOCUMENTS

A. BASICS: Drawings and general provisions of Contract, including General Conditions and Specifications, apply to this section.

1.3 RELATED SECTIONS

A. Earthwork: Section 31-0100

B. Site Clearing: Section 31-1100

C. Irrigation: Section 32-8400

D. Exterior Plants: Section 32-9300

E. Soil Preparation: Section 32-9400

1.4 SUBMITTALS

A. Submit to Architect seed tags from seed bags and tags from fertilizer bags. Seed must be Washington State Certified. Submit Sod sample for Architect approval.

B. Materials Test Reports: Soils Test Report & Recommendations

C. Operations and Maintenance Manuals: It shall be the responsibility of the Contractor to identify any and all maintenance requirements that will affect proper and healthy maturation of the landscaping. Maintenance tasks outlined shall be submitted in writing to the Architect prior to substantial completion and shall identify special needs, time requirements, and duration of maintenance.

1.5 QUALITY ASSURANCE

A. Codes and Standards: Perform work in this section in compliance with requirements of Standard Specifications, City of Bellingham Standards, and Standard Plans, unless otherwise specified.

B. Contractor Qualifications: Contract is to be performed by currently licensed firm(s) active and experienced in the respective trade(s) represented in the drawings and specifications.

C. Testing and Inspection Services: The Owner will engage a professional geotechnical consultant to test site materials proposed for use in the work and for quality control testing during turf & grasses operations. The Contractor shall provide the geotechnical consultant a minimum of 48-hours notice and organize the work to allow the geotechnical consultant to perform/provide the following minimum services:
   1. Soil test results for each type of topsoil and/or area to receive grass seed and/or sod. Contractor shall allow and coordinate inspection of subgrade prior to topsoil application as required by the Architect.
   2. Contractor shall provide samples of materials proposed for import and use in construction of topsoil and/or soil amendment to the geotechnical consultant at least one week prior to anticipated use.

D. Maintenance: Contractor is responsible for care and maintenance of all unaccepted work until project, or part of project, is accepted for substantial completion. Upon acceptance, Owner shall be responsible for maintenance of the accepted work.

E. Herbicides Application Qualifications: Applications of herbicides for weed control, as required only by applicator licensed under Washington State Law as approved by Architect.

F. Review of existing conditions: Contractor shall review site before commencement of construction. If existing conditions area in variance with drawings and specifications, notify Architect before proceeding.

1.6 SCHEDULING

A. Coordination: Coordinate this work with installation of other site improvements.

1.7 GURANTEE AND REPLACEMENT

A. Warrantee: Contractor shall not be held responsible for damage resulting from excessive environmental/climatic conditions that occur Ninety (90) days after substantial completion. Contractor shall be responsible for missing, broken, trampled, or vandalized materials until substantial completion

B. Replacement: Any hydroseeded and sod area included in this Contract that is either dead or in unsatisfactory condition as determined by the Architect, shall be re-hydroseeded as soon as conditions permit within the normal planting season at the Contractor’s expense. Large sod areas (5 square feet or greater) that are either dead or in unsatisfactory condition shall be re-sodded as soon as conditions permit within the normal planting season at the Contractor’s expense. Contractor shall identity and, if appropriate, do all work necessary to prevent a similar demise of hydroseeded areas at no extra cost to the Owner.

C. Replacement Materials: All replacement shall be as specified within original drawings and specifications.

1.8 MAINTENANCE

A. Maintenance shall begin following installation of each lawn area(s) and shall continue as follows:
   1. Protect and maintain for Ninety (90) days after all hydroseed and sod areas are accepted as substantially complete.
   2. Work includes watering, weeding, mowing, cultivating, and other operations necessary to the proper implementation of the project.
   3. Maintenance of lawn areas shall include but not be limited to protection from insect and disease, construction activities, re-seeding, re-sodding, watering, mowing, edging, and fertilizing.

1.9 CLEAN UP

A. All areas shall be kept clean, neat and orderly at all times. Dirt and rubbish shall be kept off both paved and planted areas during construction. Project shall be left safe, clean, and neat at the end of each working day. It shall be the contractor's responsibility to remove all sediment and debris from catch basins and paved drainage courses.

1.10 ADJUSTMENT OF LAYOUT

A. Architect shall have the right to adjust the location of planting beds and hydroseed area during installation as appropriate to the job at no additional cost to the Owner.

PART 2 PRODUCTS

2.1 FERTILIZER

A. Fertilizer for all lawn and sod areas as follows:

B. For Lawn Establishment: Initial seed germination fertilizer (16-16-16) or approved equal. Apply at rate of 6.25 pounds per 1,000 sq. ft. and incorporate into top 3" to 4" of topsoil (to avoid damage to new grass roots).

C. For Recently Germinated Lawn Areas: 12-4-8 controlled-release granular form or approved equal. Apply at rate of 8.33 pounds per 1,000 sq. ft.

2.2 HYDROSEEDED GRASS

A. Lawn Grass Seed Mix: Provide 34.8% Protege Perennial Ryegrass turf-type, 34.5% Interlude Perennial Ryegrass and 29.33% Opus Perennial Ryegrass. Seed shall be 98% pure with a minimum germination rate of 90% and 0% Noxious Weed found, and as provided by Landscape Supply, Inc. (360.676.6925) or equal.

B. Provide grass seed mix as specified in hydroseed areas and fertilizer as shown above. Apply grass seed at the rate of ten (10) pounds per 1,000 sq. ft., and per supplier's directions.

C. Mulch: EcoFiber or approved alternate. Apply at a rate of 2,000 pounds per acre as provided by PROFILE Products, LLC. (800.508.8681) or equal.

D. Soil Binding Agent: A non-toxic organic water-soluble agent, TerraPam or approved alternative. Apply at a rate of 3 pounds per acre and as provided by Planet Health Care, Inc. (800.421.9051) or equal.

2.3 SOD (BID ALTERNATE - for areas near building where or when seeding is not feasible).

A. Type: "Certified" turfgrass sod, free of noxious weeds and excessive amounts of other crop, weed and plants. Sod shall meet published Washington State standards and delivery receipt shall be labeled as such. Must be of free draining material approved by the Architect. 100% Natural Knit Perennial Ryegrass Sod available from Country Green Turf Farms/Agri-Turf Farms, Arlington, WA (1.800.300.1763 or 360.456.1006) or equal.

2.4 PATCH AND REPAIR

A. Grass Seed Mix: Provide fertilizer and grass seed mix as specified above.

2.5 PLANT LIST AND NOTES – SEE DRAWINGS

A. All square foot quantities noted on drawings are estimates. Contractor shall calculate all areas and determine amount of plant material required at specified rate.

PART 3 EXECUTION

3.1 GENERAL

A. All products and materials noted herein or on drawings are to be installed per manufacturer's recommendations and per each appropriate trade's highest standards.

3.2 PREPARATION

A. Inspect all planting areas for the conditions specified below, and other conditions, which would adversely affect the landscaping installation. Notify the Architect if adverse conditions area discovered. Commencement of landscaping installation indicates acceptance of the surrounding conditions. Protect surrounding construction from damage caused by the work of this section. Inspect for drainage & soil conditions, which would adversely affect seed growth.

B. Subgrade: Inspect planting areas for condition (soil texture, compaction, positive drainage, scarification, construction material/spoils, and noxious weeds/root fragments) and depth. Lawn hydroseed and Sod areas shall be free of buried stumps, rocks, stones, roots, or other debris that are larger than 1” diameter. Lawn areas shall be rough graded to provide positive drainage away from buildings. Eliminate low-lying areas, where pooling could occur. Subgrade (Subsoil) shall be loosened to depth of 2” to 4” prior to application of topsoil and/or soil amendments to prevent compaction and permit bonding of the topsoil with the subsoil.

C. Topsoil: Add topsoil to achieve depth of 6” to 8” after firming (80% to 85% standard proctor density). The topsoil shall be a loamy-sand to sandy-loam texture. Test topsoil for pH, soil texture, organic matter content and presence of noxious weed root fragments

D. . Submit soil analysis to Architect one week (minimum) prior to hydroseed and sod application. Notify Architect if any of the aforementioned soil conditions cannot be achieved. In particular, Notify Architect if clay soil texture is present in subsoil, topsoil, and/or sod.

E. Probe for construction materials that may have been discarded, such as sheet rock, concrete slurry, paint, plaster, and other construction materials. Look for fleshy organic matter with root fibers, which may be remnants of horse tail or another noxious weed that would affect long term health and maintenance cost.

F. Building Wall and Planter Waterproofing: Verify that waterproofing work has been completed and accepted, prior to landscape installation.

G. Exterior Building: Verify all painting, roofing, downspouts, gutters, and other construction work that would require access to planting beds has been completed and accepted prior to landscape installation.

H. Trenching: Verify all trenching for utilities and sleeves have been completed and accepted, prior to landscape installation. Contractor shall indicate with paint and/or stake and string the location of existing and newly installed utility lines, such as sewer, gas, water, stormwater, and communication lines prior to landscape installation.

3.3 POSITIVE DRAINAGE

A. All planting areas area to be crowned three percent (3%) from center to edge (unless otherwise noted on drawings). All grades shall flow smoothly and produce one continuous playfield with positive drainage.

3.4 FINISH CONDITIONS

A. Finish grades of seeded and sodded areas at contact points with paving shall be flush with the top of adjacent paving or curb. All finish grades shall allow for future settlement of soil.

3.5 LAYOUT

A. Contractor shall stake or paint all planting beds for inspection and approval from the Architect.

3.6 HYDROSEED PROTECTION

A. Contractor shall be responsible for maintenance of all hydroseed and sod areas until ninety (90) days after hydroseed areas are accepted as substantially complete. All hydroseed and sod areas shall be properly protected against harm from construction equipment and foot traffic, wind, and unusual weather. Maintenance of all hydroseeding shall begin following installation and include watering, fertilizing, repair and any other operations necessary for proper maintenance of the project. This includes the payment for temporary irrigation water.

B. Perform no work in, over, or adjacent to planting areas without proper protection and safeguards.

3.7 HYDROSEEDED LAWN INSTALLATION

A. Hydroseed areas indicated on drawings at any time when conditions are favorable for germination of seed and proper working of soil and establishment of turf. Calendar dates for favorable conditions area generally between April 15th and October 15th. NO HYDROSEEDING SHALL TAKE PLACE AFTER OCTOBER 15.

B. Apply approved fertilizer per manufacturer's recommendation.

C. Hydroseed shall be installed with a hydroseeder, which maintains continuous agitation of water slurry keeping additives mixed and suspended homogeneously until pumped from tank.

D. After hydroseeding has been completed irrigate all areas systematically to promote seed germination and protect new growth.

3.8 PATCH AND REPAIR

A. Contractor shall patch and repair damaged portions of newly hydroseeded areas. Submit proposed method for slope patch and repair to the Architect for approval prior to commencement of work.

3.9 HYDROSEED ESTABLISHMENT

A. Contractor shall be responsible for the mowing, watering, fertilizing, and maintaining of all hydroseed areas until sixty (60) days after hydroseed areas are accepted as substantially complete. However, this shall not exempt Contractor from repair of damaged areas until sixty (60) days after substantial completion of entire project.

B. Reseeding: Approximately twenty-two (22) days after germination, any barren area six inch (6”) in diameter or larger shall be reseeded at the specified application rate. In the event of unusual weather, overseeding may be required at a time when weather conditions are suitable for germination. Application rate for overseeding be equal to original application rate.

C. Watering: Once germination is consistent over the field and the seedlings averaging one inch (1”) in height, the watering schedule may be reduced to less frequent intervals. Maintain soil moisture without puddling.

D. Fertilizing: Fertilize with approved fertilizer at the manufacturer’s recommended rate: Apply Lawn Establishment Fertilizer to all areas to be seeded one (1) day prior to hydroseeding and incorporate into top 3” to 4” of topsoil. Apply post germination, granular controlled-release fertilizer between four (4) weeks after seeding and again between four (4) weeks after first application but no later than ten (10) weeks after seeding. Contractor shall be responsible for fertilizing all lawn areas until substantial completion or until lawn has been accepted as substantially complete by architect.

E. Edge Establishment: Contractor shall be responsible for addition or removal of seed (lawn) as required to establish a smooth, uniform, distinct lawn edge adjacent to planted areas. Contractor shall uniformly edge and/or cut beds to form clear division between planting and lawn.

3.10 SOD LAWN INSTALLATION (for areas and/or time of year when seeding not feasible)

A. Fine grade lawn area to uniform finish following contours of all areas, removing all surface rocks larger than ¾ inch diameter. Compact all lawn areas to approximately 80% to 85% standard proctor density.

B. Apply Lawn Establishment Fertilizer as shown in section 2.1 to soil prior to sodding and incorporate into topsoil 3” to 4” to avoid sod/lawn root damage.

C. Compact all lawn areas to approximately 80% to 85% standard proctor density.

D. Install sod so all the joints are tight and smooth. Lay sod so that long edges are parallel to the contours and perpendicular to the slopes. Alternate joints in running bond fashion.

E. Roll sod and then apply granular, controlled-release fertilizer as shown in section 2.1 at manufacturer’s specified rate. Final rolling process shall provide uniform surface.

F. Adjust grade irregularities as required to establish uniform smooth surface with positive drainage away from building at three percent (3%) unless otherwise stated on drawings.

G. Upon completion of final rolling, mow lawn to two inch (2”) height with reel type mower, then water. Approval will be based on uniform knitting of pieces, ultimate healthy and vigorous growth, and absence of dry spots in any new sod areas.

3.11 LAWN MAINTENANCE

A. Contractor shall be responsible for maintenance of sod and hydroseed areas during construction and for and additional Ninety (90) days after substantial completion. Maintenance shall begin following installation and include watering, reseeding, mowing, edging, fertilizing, repair of damage from erosion and other operations necessary for proper maintenance of the project. This includes the payment for temporary irrigation water. The contractor shall be responsible for the first mowing of the lawn and subsequent mowing on regular basis until substantial completion. Mowing shall occur on a weekly basis at minimum or before the grass reaches height of three inches (3”) or four (4”). Grass clippings shall be removed immediately after mowing. If the Contractor fails to cut the lawn on a regular basis, the Owner may cut the lawn and back charge the Contractor.

3.12 ACCEPTANCE OF LAWN

A. Lawn may be considered substantially complete when seeded and sodded lawn areas exhibit a uniform stand of grass and 95% control of broadleaf weeds with no dry or dead spots in any areas. Architect shall review all areas considered substantially complete and grant acceptance following complete inspection of seeded lawn installation and review of complete irrigation system.

3.13 FINAL CLEAN UP

A. Prior to inspection of substantial completion, remove all deleterious materials and debris from all areas and rake all mulched areas to fine grade. Wash clean all hard surfaces.

END OF SECTION

SECTION 32 93 00 – EXTERIOR PLANTS

PART 1 GENERAL

1.1 EXTENT OF WORK IN THIS SECTION:

A. Section Includes:
   a. Finish grading in landscaping areas
   b. Planting of trees, shrubs and groundcovers
   c. Cleanup and maintenance

1.2 REFERENCES

A. Codes and Standards: The American Association of Nurserymen "American Standard for Nursery Stock" latest edition. Washington State Department of Agriculture Standards for Nursery Stock: (WAC 16-432-010 TO WAC 16-432-130). In the event of conflict, the most stringent standard shall govern.

B. STANDARDS FOR IDENTIFICATION: Sunset Western Garden Book, latest edition, and Flora of the Pacific Northwest, Hitchcock & Cronquest, latest edition.

1.3 RELATED SECTIONS

A. Earthwork: Section 31-0100

B. Site Clearing: Section 31 1100

C. Irrigation: Section 32-8400

D. Turf & Grasses: Section 32-9200

E. Soil Preparation: Section 32-9400

1.4 SUBMITTALS

A. Samples: Submit samples of mulch and tree staking materials to Architect.

B. Certificates: Submit inspection certificates of plant materials and guaranteed analysis of fertilizer mixes. Submit certificate of applicator qualifications per 32 93 00-1.5

C. Plant List: Submit plant list within sixty (60) days after signing contract and prior to beginning any work on the site, provide in written form the location, root condition, and size of all plants on plant list. Should the Contractor neglect to provide this list within the sixty (60) allocated days, he/she forfeits any substitution benefits and shall provide plants at sizes and conditions as indicated on plant list with no exceptions. No substitutions will be made beyond the sixty (60) day period except for larger plants at no additional cost to Owner.

D. Operations and Maintenance Manuals: It shall be the responsibility of the Contractor to identify any and all maintenance requirements that will affect proper and healthy maturation of the landscaping. Maintenance tasks outlined shall be submitted in writing to the Architect prior to substantial completion and shall identify special needs, time requirements, and duration of maintenance.

1.5 QUALITY ASSURANCE

A. Codes and Standards: Perform work in this section in compliance with requirements of Standard Specifications, City of Bellingham Standards, and Standard Plans, unless otherwise specified.

B. Contractor Qualifications: Contract is to be performed by currently licensed firm(s) active and experienced in the respective trade(s) represented in the drawings and specifications.

C. Maintenance: Landscape Contractor is responsible for care and maintenance of all unaccepted work until project, or part of project, is accepted for substantial completion. Landscape Contractor shall be responsible for maintenance of all completed and accepted work for Ninety (90) days after date of substantial completion.

D. Herbicides Application Qualifications: Applications of herbicides for weed control, as required only by applicator licensed under Washington State Law as approved by Architect

E. Review of existing conditions: Contractor shall review site before commencement of construction. If actual site conditions differ from drawings and specifications, notify Architect before proceeding.

1.6 SCHEDULING

A. Coordination: Coordinate this work with installation of other site improvements.

1.7 PLANT MATERIALS INSPECTION

A. Approval: Landscape Architect will inspect plant material prior to planting and plants not meeting Specifications will be rejected. Subsequent inspections shall occur after planting and may be rejected at that time.

B. Notice: Notify Architect forty-eight (48) hours prior to meeting/inspections.

1.8 JOB CONDITIONS

A. Plant trees, shrubs and groundcovers only during periods that are in line with Pacific Northwest horticultural practices for planting as determined by season, weather conditions and locally accepted practice. Do not plant when the ground is frozen, or potential for prolonged freezing weather is present or when soil is saturated (muddy condition).

1.9 WARRANTEE AND REPLACEMENT

A. Warrantee: Contractor shall not be held responsible for damage resulting from excessive environmental/climatic conditions that occur ninety (90) days after substantial completion. Contractor shall be responsible for missing, broken, trampled, or vandalized materials until substantial completion. Two-year warrantee period shall commence on date of substantial completion of project or portions of project unless herein stated otherwise.

B. Replacement: Any plant included in this Contract that is either dead or in unsatisfactory condition as determined by the Architect, shall be removed from the site: these and any other missing plants shall be replaced as soon as conditions permit within the normal planting season at the contractor's expense. Contractor shall identify and, if appropriate, do all work necessary to prevent replacement plants form similar demise at no extra cost to the Owner.

C. Replacement Materials: All replacement plants shall be of the same variety, size, and root conditions as existing adjacent plant materials, and shall include any new growth that may have occurred since planting, such that replacement plants match existing plants of the same variety.

1.10 MAINTENANCE

A. Maintenance shall begin following installation of each planting bed area(s) and shall continue as follows:
   1. Protect and maintain for ninety (90) days after substantial completion.
   2. Work includes watering, weeding, mowing, cultivating, tightening and repairing of tree-tie, removal of dead branches, resetting plants to proper grades or upright position, and other operations necessary to the proper implementation of the project.
   3. Watering may not be delegated to the general contractor or another sub-contractor. The landscape contractor shall be responsible for watering during installation and as well as within the maintenance period.
   4. Maintenance of planting bed areas shall include but not be limited to protection from insect and disease, reseeding, resodding, watering, mowing, edging, and fertilizing.

1.11 CLEAN UP

A. All areas shall be kept clean, neat, and orderly at all times. Dirt and rubbish shall be kept off paved areas during construction. Rubbish shall be kept off planting areas. Project shall be left safe, clean, and neat at the end of each working day. It shall be the contractor's responsibility to remove all sediment and debris from catch basins and paved drainage courses.

1.12 ADJUSTMENT OF LAYOUT

A. Architect shall have the right to adjust the location of plant material during installation as appropriate to the job at no additional cost to the Owner.

PART 2 PRODUCTS

2.1 PLANTS

A. Contractor shall provide sizes, conditions, and quantities of plants shown on the accompanying plant list and on drawings. Contractor shall determine exact quantities from planting drawing and field conditions. Plants not conforming to standards and requirements listed may be rejected at any time. In grouped planting areas, precedence shall be given to specified distance on center ("o.c." on drawings) rather than estimated number of plants.

2.2 MULCH

A. Contractor shall provide 100% Shredded Bark Mulch in all planting beds & tree base lawn area circles. Material shall be free of recycled materials. Submit one-gallon (1-gallon) sample for approval. Landscape Architect must approve one-gallon (1-gallon) sample and source prior to delivery to site.

2.3 FERTILIZER

A. Trees, Shrubs, and Groundcover: Controlled-Release Fertilizer "Osmocote" (14-14-14) or approved alternative at each plant per manufacturer's recommendations. Application rate of one (1) pound per ten (1) sq. ft., and incorporate four (4) to six (6) inches deep.

B. Trees: (20-10-15) plant tablets or approved alternative per manufacturer's recommendations or approved equal upon approval of Architect.

C. Provide root stimulant: "Root Grow," vitamin B-1 as necessary.

2.4 TREE STAKING AND TREE TIE MATERIALS

A. Stakes: Two inch (2") diameter by eight foot (8') Treated Lodge Pole Pine stakes or better. Install stakes a minimum of three feet (3') below finish grade. Provide three (3) stakes per tree and install stakes two inches (2") beyond edge of rootball, i.e. (DO NOT PENETRATE ROOTBALL).

B. Tree Tie: 1" Heavy Duty Chainlock Tree Tie or equal.

2.5 PLANT LIST AND NOTES– SEE DRAWINGS

A. All square footage and quantities noted on drawings are estimates. Landscape Contractor shall calculate all areas and determine amount of plant material required at specified spacing and confer with General Contractor on laydown areas to be restored as well as areas of anticipated construction trenching that would require landscape restoration.

B. In the event there is a discrepancy between plant quantities on plant list and those shown on drawings, the greater number takes precedence.

PART 3 EXECUTION

3.1 GENERAL

A. All products and materials noted herein or on drawings are to be installed per manufacturer's recommendations and per each appropriate trade's highest standards.

3.2 PREPARATION

A. Examine all planting areas for the conditions specified below, and other conditions, which would adversely affect the landscaping installation and long term health of plant. Look for poor drainage and poor soil conditions (excessive clay content, over compaction, noxious/weed root fragments, minimal organic matter, etc.), which would adversely affect plant growth and increase long term maintenance cost. Notify the Architect if adverse conditions area discovered. Commencement of landscaping installation indicates acceptance of the surrounding conditions. Protect surrounding construction from damage caused by the work of this section.

B. Improper Drainage: Look for remnants of puddle formations, low spots, over compaction from construction equipment traffic, dead-end drainage areas with no drainage system inlet, and unincorporated layers of soil.

C. Subgrade: Inspect planting areas for condition (soil texture, compaction, appropriate subgrade elevation, depth to hardpan, positive drainage, scarification, construction material & spoils, and noxious/weed root fragments) and depth. In areas where existing buildings or pavement were located, the subgrade is to be set lower than noted in soil preparation BMP T5.13. See Soil Preparation: Section 32-9400.

D. Contaminants: Probe for construction materials that may have been discarded, such as sheet rock, concrete slurry, paint, plaster, and other construction materials. Remove all encountered construction materials. Look for fleshy organic matter with root fibers, which may be remnants of horse tail or other noxious weed that would affect long term health and maintenance costs.

E. Waterproofing: Verify that waterproofing work on exterior building wall, foundation, and planters has been completed and accepted prior to landscape installation.

F. Trenching: Verify all trenching for utilities and sleeves have been completed and accepted prior to landscape installation. Contractor shall indicate with paint and/or stake and string the location of existing and newly installed utility lines, such as sewer, gas, water, stormwater, and communication lines prior to landscape installation.

G. Exterior Building: Verify all painting, roofing, downspouts, gutters, and other construction work that would require access to planting beds has been completed and accepted prior to landscape installation.

3.3 POSITIVE DRAINAGE

A. All planting areas to be sloped away from the building at three percent (3%) (unless otherwise noted on drawings). All grades shall flow smoothly and produce positive drainage.

3.4 FINISH CONDITIONS

A. Finish grades of planting areas at contact points with paving shall be set three inches (3”) below the top of adjacent paving or curb to allow for mulch application. All finish grades shall allow for future settlement of soil prior to placement of mulch. No more than half inch (1/2”) of difference from top of pavement to top of mulch layer will be accepted.

3.5 LAYOUT

A. Prior to installation, Landscape Contractor shall stake and/or paint all planting beds for inspection and approval of Landscape Architect. Contractor shall stake and/or paint all existing and newly installed utility lines that cross under planting beds. Location of trees and large shrubs shall be staked or indicated with paint spot. Groups of low shrubs and groundcover shall be considered as a mass and edges of the massing shall be painted prior to observation and approval of Architect.

B. Should Contractor choose to begin installation prior to approval, it shall be at his own risk.

C. Contactor shall notify Architect in writing immediately of any differences between drawings and actual site and await instructions before proceeding.

D. Exterior row of plants shall be set parallel to adjacent edges. Interior plants shall be spaced as specified on drawings.

3.6 ADJUSTMENT OF LAYOUT

A. Architect and/or Landscape Architect may require adjustment of the position of any plant material in the field for best-finished appearance or in response to existing site conditions at any time during installation period. Adjustments shall be made at no additional cost to the Owner.

3.7 PLANT PROTECTION

A. Contractor shall be responsible for maintenance of planting areas during construction and for an additional ninety (90) days after substantial completion. All plantings shall be properly protected against harm from wind and unusual weather. Maintenance shall begin following installation and shall include watering, weeding, fertilizing, repair of planting beds damaged from erosion and

other operations in order to promote long term health of planting areas. This includes the payment for temporary irrigation water.

B. Special planting techniques, defoliating, wilt proofing, or spray-misting may be required by Architect for planting during prolonged periods of drought and/or strong dry winds and shall be provided at no additional cost to the Owner.

C. Perform no work in, over, or adjacent to planting areas without proper protection and safeguards.

D. Install all delivered and accepted plants once all plant material has been accumulated. Plants that cannot be planted within one (1) day after arrival are to be stored in a protected area to avoid desiccating winds, heat/sun, and construction activity. Heel-in stored plant material in accordance with acceptable horticultural practices. Protect rootball of ball & burlapped plants with moist earth, sawdust, mulch, or other acceptable material.

3.8 PLANT LOCATION

A. Set trees, shrubs and groundcover according to spacing on drawings. If site position is more than two feet (2') from drawing position, consult with Architect prior to installation. Landscape Contractor shall be aware of location and depth of existing and recently installed utility lines prior to installation. Trees shall be placed a minimum of four feet (4') offset from utility lines.

3.9 PLANTING PITS

A. All trees, shrubs and groundcovers shall be pit planted. Dig pits for trees and shrubs as indicated on drawings details.

B. Backfill material for plantings to be mix of fifty percent (50%) excavated pit soil and fifty percent (50%) specified topsoil (Topsoil A). Upper four to six inches (4"-6") of planting pit shall be backfilled with Topsoil A.

C. If unsuitable soil such as glacial till or clay is encountered when excavating the tree pit, backfill with 2:1 blend/mix of native soil to new/imported topsoil mix. If Contractor encounters clay soil or any unusual condition, which, in the opinion of the Landscape Contractor, may affect the long term health of the new plant; notify the Architect immediately.

D. Remove all excess or unsuitable material excavated from plant pits and dispose of in appropriate excavation spoils location.

3.10 PLANTING

A. Plant when all plant material is available and when weather conditions are consistent with good horticultural practices. Early morning to noon is considered optimal planting time. Early fall or late spring installation is preferred.

B. Add water to moisten bottom and sides of plant pit and ensure plant container stock and burlapped root balls are moist prior to placement in plant pit. Ensure

depth of pit will allow for settling of plant material and still achieve specified height above finish grade. Intent is to meet and match nursery-grown depth of plant material. SEE DRAWING DETAILS.

C. Handle burlapped rootballs (trees and large shrubs) by the ball. Avoid using trunk of tree or shrub when transporting to and lowering into plant pit in order to limit cracking of rootball.

D. After lowering burlapped rootball into plant pit, check height of rootball relative to finish grade to ensure plant depth is appropriate. Raise plant if necessary by adding backfill mix specified herein below rootball and tamp with foot. Add backfill soil mix up to half (1/2) rootball height and add water. Allow water to drain down and loosen twine and cut away top third (1/3) of burlap and string. If wire basket is used, cut off top third (1/3) of wire basket. DO NOT REMOVE ENTIRE WIRE BASKET AND/OR BURLAP. Burlap shall not be within six inches (6”) of finish grade to avoid wicking of moisture out of the soil column.

E. Container stock shall be removed carefully to avoid ripping of fibrous roots and separation of roots from container soil. If container stock is root bound, cut away container and slash roots vertically in three (3) equally spaced places minimum before planting.

F. Backfill plant pit to within four to six inches (4”-6”) of adjacent subgrade elevation with excavated pit soil and Topsoil B mix specified in section 32 94 00. Add compost & controlled-release fertilizer to Topsoil B. Thoroughly incorporate compost & controlled-release fertilizer into Topsoil B for even distribution. Complete backfill with amended soil mix. Obtain written approval for use of fertilizer tablets on trees only.

G. Finish grade at plants after planting and settling shall afford positive drainage from crown at no less than three percent (3%), unless otherwise specified.

H. Form earth saucer as shown in drawing detail(s) and add specified mulch. See mulch specification application instructions below.

I. Form four foot (4’) round four inch (4”) depth mulch rings around all trees planted within lawn areas.

3.11 MULCHING

A. Remove debris, such as rocks that are one inch (1”) or larger from planting beds prior to mulching. Install three inch (3”) minimum mulch layer over planting beds.

B. Mulch installed over tree and shrub rootballs shall be tapered, with depth of mulch reduced at trunk/base of plant material.

C. Mulch groundcover planting beds with a minimum three-inch (3”) layer of mulch materials within two days after planting. Cover entire bed areas evenly. Do not cover branches.

3.12 FINAL CLEAN UP

A. Prior to inspection of substantial completion, remove all deleterious materials and debris from all areas, rake neatly all planting areas to and even fine grade and wash clean all hard surfaces.

END OF SECTION

SECTION 32 94 00 – SOIL PREPARATION

PART 1 GENERAL

1.1 EXTENT OF WORK IN THIS SECTION

A. Section Includes:
   a. Subgrade preparation
   b. Soil preparation and finish grading
   c. Cleanup and maintenance

1.2 REFERENCE DOCUMENTS

A. COMPOSTING FACILITIES: WAC 173-350-220

1.3 RELATED SECTIONS

A. Earthwork: Section 31-0100

B. Site Clearing: Section 31-1100

C. Turf & Grasses: Section 32-9200

D. Exterior Plants: Section 32-9300

1.4 SUBMITTALS

A. Submit soil test and topsoil sieve results to Architect.

B. Samples: Submit samples of Topsoil A, Topsoil B, and compost sample to Architect.

C. Obtain acceptance of compost, and topsoil sieve analysis prior to delivery of materials to the site.

D. Operations and Maintenance Manuals: It shall be the responsibility of the Contractor to identify any and all maintenance requirements that will affect proper and healthy maturation of the landscaping. Maintenance tasks shall be submitted in writing to the Architect prior to substantial completion and shall identify special needs, time requirements, and duration of maintenance to the Owner

1.5 QUALITY ASSURANCE

A. Codes and Standards: Perform work in this section in compliance with requirements of Standard Specifications, Standards, and Standard Plans, unless otherwise specified

B. Contractor Qualifications: Contract is to be performed by currently licensed firm(s) active and experienced in the respective trade(s) represented in the drawings and specifications.

C. Testing and Inspection Services: The Contractor will engage a professional geotechnical consultant to test site materials proposed for use in the work and for quality control testing during soil preparation operations. The Contractor shall provide the geotechnical consultant and the Project Landscape Architect a minimum of 48 hours notice and organize the work to allow the geotechnical consultant and/or perform/provide the following minimum services:
   1. Soil test results for each type of topsoil and/or area to receive grass seed, sod, trees, shrubs, and groundcover.
   2. Contractor shall allow and coordinate inspection of subgrade by Landscape Architect prior to topsoil application as required by the Architect.
   3. Contractor shall provide samples of materials proposed for import and use in construction of topsoil and/or soil amendment to the geotechnical consultant at least one week prior to anticipated use.

D. Subgrade Maintenance: Contractor (General Contactor or Earthwork Contractor) is responsible for care and maintenance of all unaccepted subgrade preparation work until that phase of work is approved by Landscape Architect and the work of the Landscape Contractor begins.

E. Topsoil Maintenance: Landscape Contractor is responsible for care and maintenance of all unaccepted topsoil preparation work, including loosening of subgrade, until that phase of work is approved by Landscape Architect and planting or hydro-seeding and/or mulching begins.

F. Plant Maintenance: Landscape Contractor is responsible for care and maintenance of all unaccepted planting or hydroseed areas and mulching work until project, or part of project, is accepted for substantial completion. Landscape Contractor shall be responsible for maintenance of plants and hydroseed areas until Ninety (90) days after planted and hydroseeded areas have been accepted by the Architect as substantially complete.

G. Review of Existing Conditions: Contractor shall evaluate site before commencement of construction. If existing conditions are in variance with drawings and specifications, notify Architect before proceeding.

1.6 SCHEDULING

A. Coordinate this work with installation of other site improvements.

1.7 ENVIRONMENTAL CONDITIONS

A. Prepare soil only when topsoil is not saturated (muddy or wet condition). Take precautions to control runoff, subgrade, topsoil and/or soil compost and to contain in place on project site. The Contractor is required to comply with provisions of Section 31 25 00 – Erosion Control.

1.8 WARRANTEE AND REPLACEMENT

A. Warrantee: Contractor shall not be held responsible for damage resulting from excessive environmental/climatic conditions that occur Ninety (90) days after substantial completion.

1.9 MAINTENANCE

A. Maintenance responsibilities shall begin following installation of each phase or stage of the landscape installation work. Contractor (General Contractor or Earthwork Contractor) shall achieve and maintain appropriate subgrade elevation until subgrade has been accepted by Landscape Architect.

B. Landscape Contractor shall continue to protect and maintain loosened subgrade and prepared topsoil areas until substantial completion.

1.10 CLEAN UP

A. All areas shall be kept clean, neat and orderly at all times. Dirt and rubbish shall be kept off paved areas during construction. Rubbish shall be kept off lawn and planting bed areas. Project shall be left safe, clean, and neat at the end of each working day. It shall be the contractor's responsibility to remove all sediment and debris from catch basins and paved drainage courses. In the event sediment has entered the storm drain system pipes, the Contractor shall be responsible for flushing pipes and removing sediment from downstream drainage structures.

1.11 ADJUSTMENT OF LAYOUT

A. Architect or Landscape Architect shall have the right to adjust the location of material during installation as appropriate to the job at no additional cost to the Owner.

PART 2 PRODUCTS

2.1 IMPORTED TOPSOIL/TOPSOIL A

A. Topsoil A: Imported Topsoil A shall be Vegetable Garden Mix by Cedar Grove Compost (Maple Valley Location) or approved equal. Lawn areas, imported topsoil shall be Two-way Mix as available at Cedar Grove Compost or approved equal. Imported topsoil shall be free of noxious weed material (seeds, rhizomes, and/or roots). The components of the soil must be evenly distributed throughout the topsoil mix. Provide one-gallon (1-gallon) sample and source for approval by Architect prior to delivery to site.

2.2 CONSTRUCTED TOPSOIL/TOPSOIL B

A. Topsoil B: Landscape Contractor shall construct topsoil B on-site using combination of native topsoil and imported compost. Application of Topsoil B

shall be in proposed lawn areas only. Native topsoil shall be taken from existing landscape areas within project work limits. The top twelve (12") of the soil column shall be used in the Topsoil B mix and stockpiled in designated area(s). Maximum height of stockpile shall be four feet (4'). Stockpiled material shall be free of noxious weeds and covered to prevent saturation. Grass areas stripped for roadway or building footprint shall be used for topsoil B mix and shall be distributed to future lawn areas only. Topsoil B shall be free of noxious weed material (seeds, rhizomes, and/or roots). Topsoil B shall be not be screened. Intent is to maintain good gradation of particles including organic matter such as wood and large rocks in order to maintain good/healthy soil structure. Native-topsoil-to-imported-compost ratio shall be three to one (3 Native Soil : 1 Compost). The components of the constructed topsoil must be evenly distributed throughout the topsoil mix. Provide one-gallon (1-gallon) sample and soil test for approval by Architect prior to installation.

2.3 COMPOST/SOIL AMENDEMNT:

A. Compost: Compost shall be from yard trimmings or similar organic matter composted through aerobic decomposition as available at Cedar Grove Compost or approved equal. Imported compost shall be composted in accordance with WAC 173-350-220 and free of noxious weed material. Provide one-gallon (1-gallon) sample and source for approval by Architect prior to delivery to site.

PART 3 EXECUTION

3.1 GENERAL

A. All products and materials noted herein or on drawings are to be installed per manufacturer's recommendations and per each appropriate trade's highest standards.

3.2 PREPARATION

A. Contractor and/or Landscape Contractor shall examine all planting areas for the conditions specified below, and other conditions, which would adversely affect the landscaping installation and long-term health of plant. Check for poor drainage and soil conditions (excessive clay content, over compaction, noxious weed root fragments, appropriate subgrade elevation, minimal organic matter, etc.), which would adversely affect plant growth and increase long term maintenance cost. Notify the Architect if adverse conditions area discovered.

B. Commencement of landscaping (loosening of subgrade per soil preparation BMP T5.13), topsoil incorporation, planting, hydro-seeding, and mulching shall be approved by the project Landscape Architect prior the Landscape Contractor subgrade and topsoil scope of work. That is, the subgrade elevation, which is to be set by the earthwork or general contractor shall be approved prior to landscape contractor commencement of work.

C. Improper Drainage: Contractor and Landscape Contractor shall look for remnants of puddle formations, low spots, over compaction from construction equipment traffic, dead-end drainage areas with no drainage system inlet, and unincorporated layers of soil.

D. Subgrade: Landscape Contractor shall Inspect planting areas for condition (soil texture, compaction, appropriate subgrade elevation, depth to hardpan, positive drainage, construction material & spoils, and noxious/weed root fragments) prior to loosening subgrade per soil preparation BMP T5.13. In areas where existing buildings or pavement were located, the subgrade is to be set lower than noted in soil preparation BMP T5.13. See section 3.3, B thru H.

E. Contaminants: Contractor shall probe for construction materials that may have been discarded, such as sheet rock, concrete slurry, paint, plaster, and other construction materials. Contractor shall remove construction debris.

F. Waterproofing: Contractor verify that waterproofing work on exterior building wall, foundation, and planters has been completed and accepted, prior to landscape installation.

G. Trenching: Contractor shall verify all trenching for utilities and sleeves have been completed and accepted, prior to landscape installation. Contractor shall indicate with paint and/or stake and string the location of existing and newly installed utility lines, such as sewer, gas, water, stormwater, and communication lines prior to soil preparation and topsoil installation.

H. Exterior Building: Contractor shall verify all painting, roofing, downspouts, gutters, and other construction work that would require access to planting beds has been completed and accepted prior to landscape installation.

3.3 SUBGRADES AND TOPSOIL DEPTHS

A. Contractor (General Contractor or Earthwork Contractor) is to leave all planting areas in a clean condition and to bring all grades to designated subgrades, except special areas noted on drawings. Landscape Architect and Landscape Contractor shall verify these conditions prior to onset of landscape construction and notify Architect of any discrepancies.

B. All landscape areas shall be set at appropriate subgrade elevation noted in Civil Engineering and Landscape specifications before commencement of topsoil placement. Commencement of landscape construction shall represent acceptance of subgrade conditions and Landscape Contractor thereby accepts responsibility for any additional steps, which may be necessary to achieve the proposed design at no additional cost to the Owner.

C. Seeded Lawn in Previously Pervious Ares (Not Existing Building or Pavement): Contractor shall establish subgrade at eight inch (8”) below design finish grade to allow for installation of two lifts. Each lift shall be four inch (4”) compacted depth of Topsoil B. First lift installed shall be incorporated (using excavator bucket with

teeth or other spiked, riper like attachment) into the loosened subgrade. Intent is to form a twelve inch (12”) depth of planting media.

D. Seeded Lawn in Previously Impervious Areas (Existing Building or Pavement): Contractor shall establish subgrade at twelve inch (12”) below design finish grade to allow for installation of two lifts. Each lift shall be four inch (4”) compacted depth of Topsoil B. First lift installed shall be incorporated (using excavator bucket with teeth or other spiked, riper like attachment) into the loosened subgrade. Intent is to form a sixteen inch (16”) depth of planting media.

E. Seeded Areas On Amended Lawn Areas: Existing lawn areas to be amended shall have two inch (2”) depth of compost added into existing topsoil and shall be incorporated (tilled) into the subgrade soil. If existing lawn areas are compacted due to construction work or previous conditions include compacted soils, then landscape contractor shall loosen existing lawn area using excavator bucket with teeth or other spiked, riper like attachment that can loosen the compacted soil and incorporate the compost. Intent is to form twelve inch (12”) depth of planting media.

F. Tree and Shrub Planting in Previously Pervious Areas (Not Existing Building or Pavement): Contractor shall establish subgrade at Fifteen inches (15”) below design finish grade, unless otherwise noted on the landscape plan and shall allow for two (2), four inch (4”) to six inch (6”) compacted depth lifts of Topsoil A and three inch (3”) depth of mulch topdressing. First lift installed shall be incorporated (using excavator bucket with teeth or other spiked, riper like attachment) into the loosened subgrade. Intent is to form twelve inch (12”) depth of planting media with three inch (3”) depth of mulch.

G. Tree and Shrub Planting in Previously Impervious Areas (Existing Building or Pavement): General Contractor or Earthwork Contractor shall establish subgrade at twenty one (21”) below design finish grade to allow for eighteen inch (18”) compacted depth of Topsoil A. First lift installed shall be incorporated (using excavator bucket with teeth or other spiked, riper like attachment) into the loosened subgrade. Intent is to form eighteen inch (18”) depth of planting media with three inch (3”) depth of mulch.

H. All areas shall be graded such that finish subgrade is flush with finish subgrade of all adjacent areas except as noted. All areas shall allow for topsoil and mulch added to individual planting pits as specified herein. All finish subgrades shall allow for reasonable settlement of soils.

3.4 SOIL PREPARATION

A. Landscape Contractor shall scarify all compacted subgrades as noted to promote proper drainage and limit stratified soil layers. General Contractor and/or Earthworrk Contractor shall set subgrade as noted previously and remove debris from areas and create smooth, uniform surfaces.

B. Seeded Lawn Areas On Amended Lawn Areas: Rip existing lawn and then scarify/till existing lawn area in order to breakup sod into clumps and loosen

subgrade. Rake sod clumps to Topsoil B seeded areas and distribute evenly over subgrade for future incorporation into subgrade (see soil preparation “Seeded Lawn Areas on Topsoil B below). Install two inch (2”) depth of compost and incorporate into top four inches (4”) of subgrade with rototill. Rake to smooth uniform finish. Compact to eighty percent (80%) dry maximum density. Rake surface free of all rock and debris larger than half inch (1/2”) diameter.

C. Seeded Lawn Areas On Topsoil B: Scarify/loosen top 4” of subgrade. Topsoil B and sod debris from existing lawn/playfield preparation step above. Incorporate into loosened subgrade with rototill. Add remainder of soil, rake to smooth uniform finish. Compact to eighty percent (80%) dry maximum density. Rake surface free of all rock and debris larger than half inch (1/2”) diameter. Intent is to have one uniformly sloped continuous playfield. Top dressing and raking is required to blend the constructed playfield with the existing amended playfield.

3.5 COMPACTION

A. Limit compaction of planting areas. Reduce excessive compaction by limiting or eliminating construction equipment access to planting areas. Remediate over compaction as directed by the Architect including ripping, regarding and recompaction or over-excavation and in-kind replacement per plan.

B. Percentage of Maximum Density Requirements: Compact soil to no less than the following percentages for maximum density for soils which exhibit a well-defined moisture density relationship (cohesive soils - clay to silty-loam) determined in accordance with ASTM D698; and not less than the following percentages of relative density; determined in accordance with ASTM 4253, for soils which will not exhibit a well defined moisture density relationship (cohesion less soils - Sand to Gravel).

C. Backfill:
   a. Solid Piped Drainage Bedding under pipe – 95%
   b. Solid Piped Drainage Bedding over pipe – 75%
   c. Solid Piped Drainage Backfill – 95%
   d. Perforated Piped Drainage Bedding and Top Lift, water settle, 75%
   e. Irrigation Pipe Bedding below pipe – 95%
   f. Irrigation Pipe Bedding over pipe – hand tamp to 75%
   g. Over Excavation Backfill of Existing Subgrade to remain – 95%

D. Subgrades:
   a. Subgrade soils in lawn areas – 75%
   b. Subgrade soils in landscape planting areas – 70%

E. Surface Fills:
   a. Planting Soils – 80%
   b. Fill slopes exceeding 3:1, to prevent erosion – 90%

F. Moisture Control:

a. Where subgrade or lift of soil material must be moisture conditioned before compaction, uniformly apply water to surface of sub-grade, or layer of soil material, to prevent free water appearing on surface during or subsequent to compaction operations.

G. Before compaction, moisture or aerate each layer as necessary to provide optimum content. Compact each layer to required percentages of maximum dry density relative dry density for each area classification.

H. Do not perform compaction operations on saturated/excessively wetted soils.

3.6 POSITIVE DRAINAGE

A. All planting areas area to be sloped at three percent (3%) building to pavement edge (unless otherwise noted on drawings). All grades shall flow smoothly and produce positive drainage.

3.7 FINISH CONDITIONS

A. Finish grades of seeded areas at contact points with paving shall be flush with the top of adjacent paving or curb. Finish grades of planting areas at contact points with paving shall be set three inches (3”) the top of adjacent paving or curb to allow for mulch application. All finish grades shall allow for future settlement of soil prior to placement of mulch. No more than half inch (1/2”) of difference from pavement to top of mulch layer will be accepted.

3.8 LAYOUT

A. Layout verification refers to staking location of all planting areas.

B. No work shall commence on installation of materials until layout is verified and accepted by Landscape Architect. Should Contractor choose to begin installation prior to approval, it shall be at his own risk.

C. Contactor shall notify Architect in writing immediately of any differences between drawings and actual site and await instructions before proceeding.

3.9 ADJUSTMENT OF LAYOUT

A. Architect may require adjustment of the position of any material in the field for best-finished appearance or in response to existing site conditions at any time during installation period. Adjustments shall be made at no additional cost.

3.10 FINAL CLEAN UP

A. Prior to inspection of substantial completion, remove all deleterious materials and debris from all areas and rake all mulched areas to fine grade. Wash clean all hard surfaces.

END OF SECTION

SECTION 33 10 00 – UTILITY COMPANY REQUIREMENTS

PART 1 - GENERAL

1.1 UTILITY STANDARDS

A. Refer to attached Puget Sound Energy Standards from their Electric Service Handbook 2019.

B. Contractors are directed to use this guide to inform work associated with the electrical power supply to the project.

PART 2 - PRODUCTS- (NOT USED)

PART 3 – EXECUTION - (NOT USED)

END OF SECTION

Chapter 2

Permanent underground services

This chapter provides you with information on PSE's underground service installation. Please follow these requirements to avoid a delay in your service hookup. If you have any questions about this information, call Customer Construction Services (CCS) at **1-888-321-7779.**

Service equipment installation responsibilities

Puget Sound Energy

PSE is responsible for furnishing, installing, and maintaining the primary voltage system equipment. This equipment includes primary conduit and cables, service conductor connectors at the transformer, current transformers (CT), meter(s), and meter wiring.

Customer

You are responsible for furnishing, installing, and maintaining all required service entrance equipment, including the service entrance conduits* from the meter socket or current transformer enclosure to PSE's designated point of delivery.

For services where current transformers are required, you will also need to run gray electrical conduit from the CT enclosure to the meter base. Refer to Chapter 4, Section 3, Current Transformer (CT) Metering (up to 800 amps) for more information.

NOTE: PSE will supply, install, and maintain the CTs and meter wiring.

*DO NOT run a grounding wire to PSE's point of connection at the transformer or handhole. PSE will not connect it.

Preparing for your service hookup

The following list will help you prepare your project for the installation of an underground service. After you complete these items, PSE will connect your service and install the metering equipment.

1. Check for any local ordinances/covenants that may prevent you from obtaining an underground service.
2. Complete Electric Service Application Permanent Non-Residential 201E or Electric Service Multi-Family Development 400E.
3. Supply site drawings and load information to your CCS Representative (refer to the submitting an application for service section in Chapter 1, Steps to a Smooth Permanent Service Installation).
4. Contact CCS to determine where your underground service will originate.
5. Determine an approved meter location (refer to the meter locations section in Chapter 4, General Metering Requirements).

6. If required by CCS, provide an easement for any permanently installed PSE equipment located on your property.
7. Provide payment for any preconstruction costs determined by your CCS Representative.
8. Provide all excavation for PSE's facilities and get an approval for the proper vault entrance location of your conductor/conduit.
9. Provide service conductors.
10. Install required service entrance equipment.
11. Connect the meter sockets and permanently label them to indicate the part of the premises they serve, such as unit number.
12. Obtain an approved electrical inspection.
13. Call CCS at **1-888-321-7779** to initiate a connection and energize your new service.

Cable limits for transformers

The maximum number of secondary conductors allowed for a specific transformer size is limited to those listed below in Table 3.

Table 3 Maximum cable runs per transformer

Transformer Size and Voltage (PSE-provided)	*Maximum secondary cable connections (Customer-provided)
45 thru 300 kVA, 120/208 V secondary	12 Runs #2 – 500 mcm OR 10 Runs 501 – 750 mcm
45 thru 300 kVA, 277/480 V secondary	12 Runs #2 - 500 mcm OR 10 Runs 501 - 750 mcm
500 thru 750 kVA, 120/208 V secondary	18 Runs #2 – 500 mcm OR 14 Runs 501 – 750 mcm
500 thru 750 kVA, 277/480 V secondary	12 Runs #2 - 500 mcm OR 10 Runs 501 - 750 mcm
1000 kVA, 120/208 V secondary	24 Runs #2 – 500 mcm OR 18 Runs 501 – 750 mcm
1000 kVA, 277/480 V secondary	18 Runs #2 - 500 mcm OR 14 Runs 501 - 750 mcm
1500 thru 2500 kVA, 277/480 V secondary	24 Runs #2 - 500 mcm OR 18 Runs 501 - 750 mcm

* These are maximum allowed per the transformer size and voltage, however, the sizing of the vault and training of the cable might reduce these runs. The availability of open position shall be verified. Contact your CCS representative or Project manager for your specific requirements.

Customer-provided trenches

Trench width for PSE facilities

The minimum trench width is 18 inches; however, the excavator may need to increase the trench width depending on the other conduits/lines being installed in the trench.

When increasing the trench width, remember to allow a minimum of 12 inches of horizontal separation between PSE's electrical conduits/cables and gas lines.

PSE will allow **customer-owned facilities** within an electric power trench, if the following minimum horizontal clearances from PSE facilities are maintained:

- 18 inches minimum for customer-owned tight-line sewer (not tile), natural gas lines, propane gas lines, fuel oil lines, and water mains up to 6 inches in diameter.
- 12 inches minimum for water service, irrigation pipes, lighting, security and electric supply circuits, communications lines, culverts, and closed system roof drains/storm drains (not French drains).

NOTE: When constrained by obstructions or clearances from other buried utility lines/facilities, the horizontal clearance between PSE power and communications may be reduced to 4 inches with mutual agreement from the participating communications providers. It is your responsibility to obtain agreement from participating communications providers for a reduced clearance when needed.

Figure 1 illustrates PSE's width and depth requirements for primary cable voltage line extension trenches on private property with and without a gas line present.

For trenching requirements with a gas line present, refer to the Joint Utility Mainline Trench Excavation Requirements.

Trench routing/ clearances

The routing of a customer-provided trench must maintain a minimum of 5 feet from septic tanks and a minimum of 10 feet from drain fields.

Figure 1 Typical joint utility trench with primary voltage cable on your private property (cross-section view)

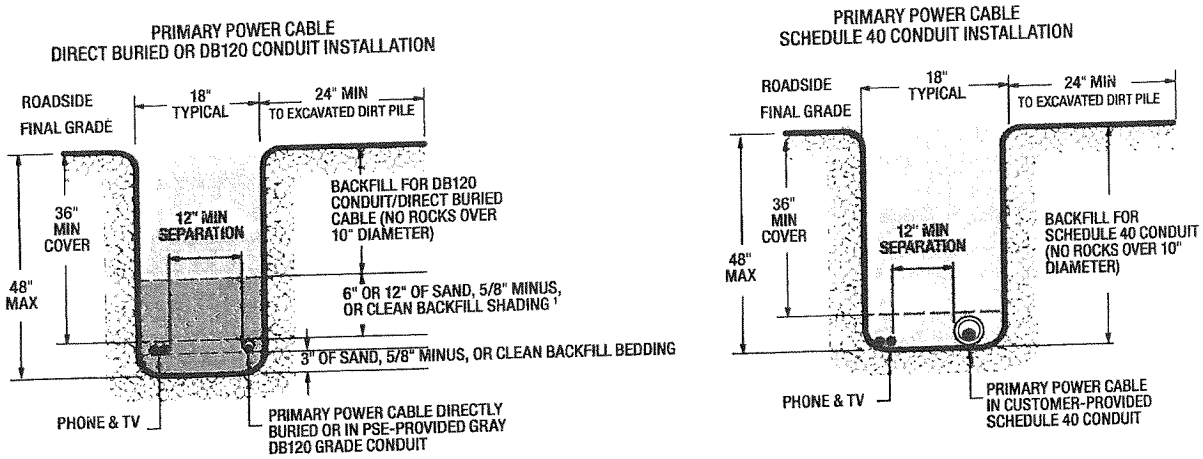

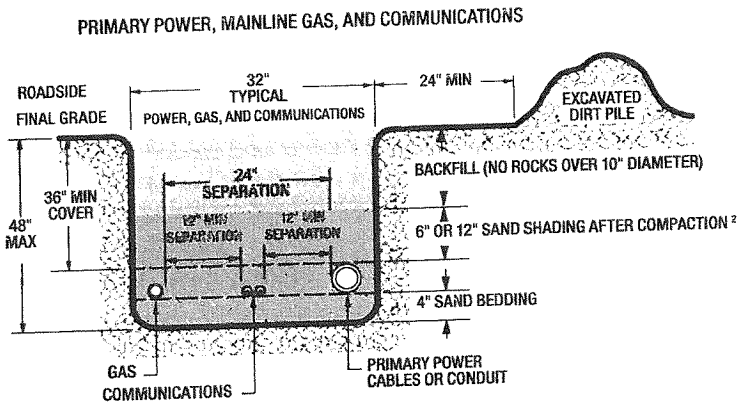

NOTE 1
SEE TRENCH AND BACKFILL REQUIREMENTS FOR PRIMARY ELECTRIC LINE EXTENSION TRENCHES (NO PSE GAS) ON PAGE 11.

NOTE 2
SEE TRENCH AND BACKFILL REQUIREMENTS FOR PRIMARY ELECTRIC LINE EXTENSION TRENCHES (WITH PSE GAS) ON PAGE 11.

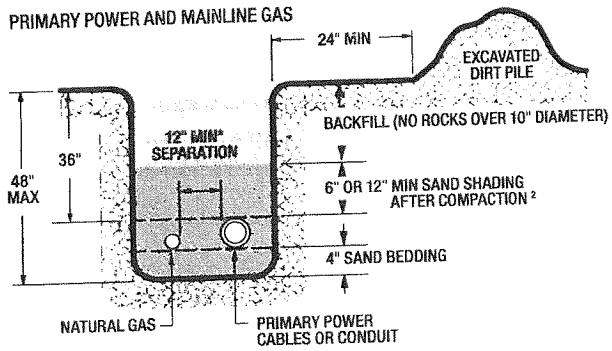

Trench excavating requirements for PSE facilities

The following requirements for the trench must be met before power conduits/cables will be installed.

- When you trench in the right-of-way on PSE's behalf, the governing jurisdictions issue public roadway use permits to PSE. PSE requires that you provide a signed Excavation Requirements & Final Grade Certification document that is supplied by your PSE Project Manager.
- For trench work provided by you within a public right-of-way or a PSE easement, PSE requires that you use a Washington State licensed and bonded contractor and complete and sign a PSE trenching agreement form.

  NOTE: Acquiring permits for excavation-related activity can take up to a month or longer depending on the amount of material being excavated, the location of the excavation, and the jurisdiction issuing the permit. To avoid schedule delays, contact your PSE Project Manager for an estimated time frame for acquiring your permits.
- The trench shall be excavated according to the trench detail, and PSE's work sketch.
- The trench shall be straight and the trench bottom shall be smooth, level, and free from debris, garbage, sharp objects, or rocks larger than 4 inches.
- If PSE cable will be direct buried or in gray DB120 conduit, you must provide at least 3 inches of sand bedding on the bottom of the trench.
- Excavated or loose material shall be placed at least 2 feet from the field edge of the trench.
- Water shall be removed by pumping or draining.

Restrictions: When PSE's project scope requires the manipulation of an existing primary cable or circuit, customers or third-party contractors shall not uncover and expose existing buried primary voltage power lines or ducts in an energized state. PSE shall coordinate with the customer and service provider for the lines to be de-energized and grounded, or PSE shall provide qualified workers to perform exposure of energized buried lines. These restrictions apply to both direct-buried cables and cables in conduit.

Trench and backfill requirements for primary electric line extension trenches (no PSE gas)

PSE will not energize its facilities until the backfill is complete.

When PSE primary cables are directly buried, or installed in gray DB120 grade conduit, you are responsible for the following:

- Providing a minimum 3-inch bedding layer of sand, 5/8-inch minus, or clean backfill (with rocks or solid material no larger than 5/8 inch in diameter and no sharp objects) placed below cables/conduits.
- A 12-inch shading layer of the same material above the directly buried cables or DB120 conduit.
- If native backfill is completely free of foreign objects and rocks in excess of 8 inches in diameter, shading with sand, 5/8-inch minus, or clean backfill can be reduced to 6 inches.
- The remaining trench shall be backfilled with soil that is free of rocks larger than 10 inches in diameter and foreign objects.

When PSE primary cables are installed in gray Schedule 40 grade conduit, you are responsible for the following:

- Backfilling the trench with soil that is free of foreign objects and rocks larger than 10 inches in diameter. Bedding and shading of the conduit with sand, clean backfill or select fill as 5/8-inch minus crushed aggregate is not required.

Trench and backfill requirements for primary electric line extension trenches (with PSE gas)

You must provide a 12-inch layer of sand above and a 4-inch layer of sand bedding below the utilities before backfilling (see Figure 1). If native backfill is completely free of foreign objects and rocks in excess of 8 inches in diameter, sand shading over utilities can be reduced to 6 inches after compaction.

You are responsible for the following:

- Completing backfill as soon as practical after facilities are placed and inspected.
- Carefully placing backfill to prevent damage or movement of the cables or conduit.
- Cost of damages to PSE facilities caused by improper backfill or compaction.
- Relocation costs due to change in grade or alignment.

CAUTION: Do not use a compactor directly over the power conduit(s) until at least 30 inches of backfill is in place so that the compactor will not damage the cables or conduit. Do not penetrate the soil deeper than 3 inches during compaction with a backhoe compactor.

Vault excavation requirements

You are responsible for the following:

- Excavating the vault or handhole location. The most commonly used vault types and the required excavation dimensions are shown in Figures 3–5.
- Removing debris and leveling the bottom of the excavation with a 6-inch base of crushed rock.
- Backfilling the excavation to finished grade at 2 inches below the vault top (if in a landscaped area), or backfilling flush with the grade (if in a hard-surfaced area).
- Installing a felt joint around the vault top or cover when concrete is poured up to the vault (e.g., when the vault is to be in a sidewalk).

Conduit installed at vaults

You are responsible for the following:

- Grouting around your service conduits that enter into PSE vaults (except for the vault types shown in Figure 4). Conduits may only enter through mousehole openings or knockouts (see Figure 2).
- Sealing service entry conduit at PSE's vault to prevent water from entering into your service panel.
- Contacting CCS for entry location approval and procedures prior to extending conduit or conduit bends into existing service vaults.

NOTE: Refer to the Customer wiring to energized PSE transformers section of this chapter for the proper procedure for entering a PSE vault.

Figure 2 Location of customer conduit in PSE vaults

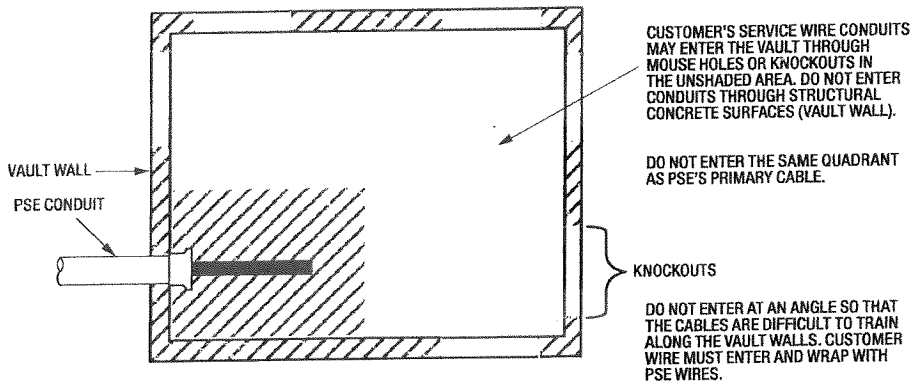

Figure 3 Minimum dimensions and excavation requirements for small, secondary connection handholes

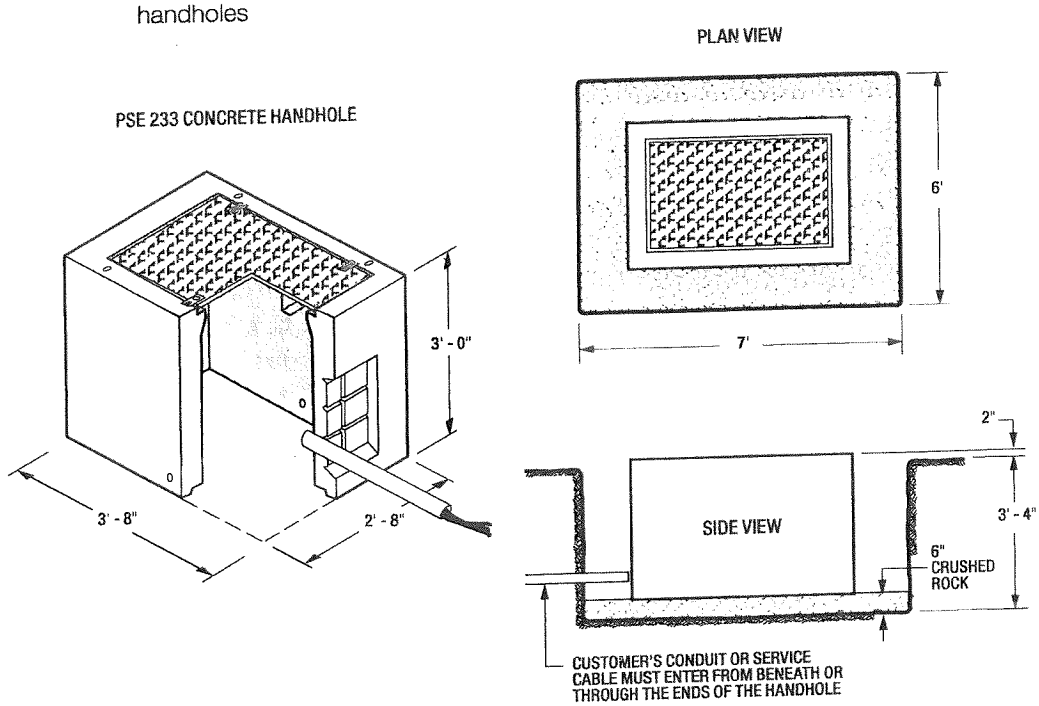

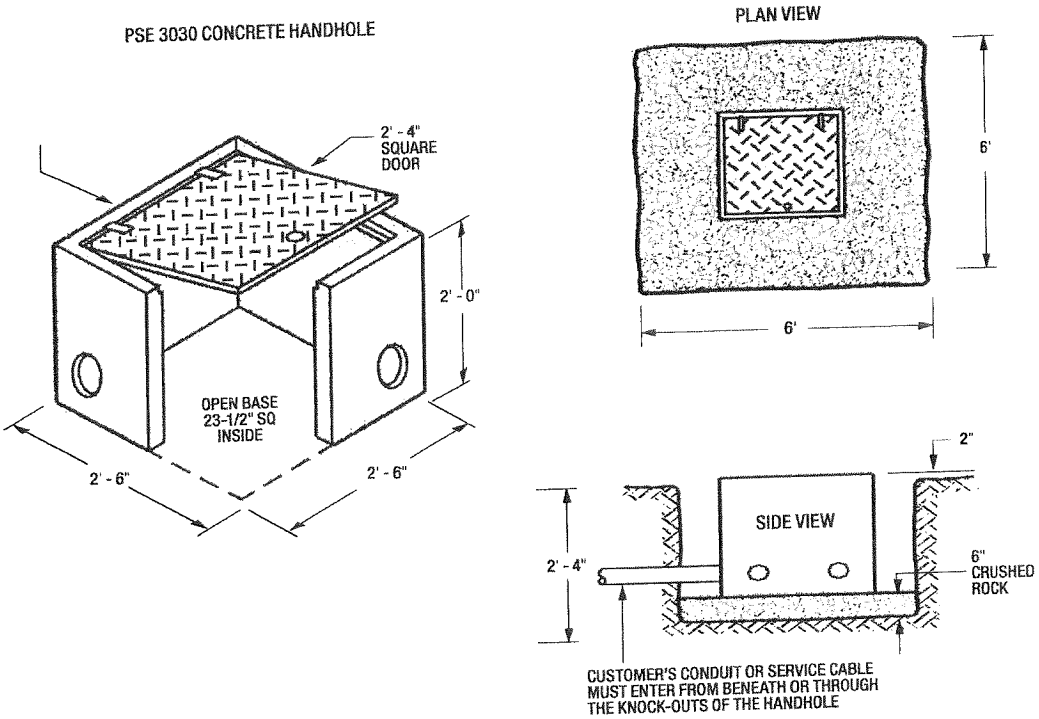

Figure 4 Minimum dimensions and excavation requirements for a single-phase padmount transformer vault

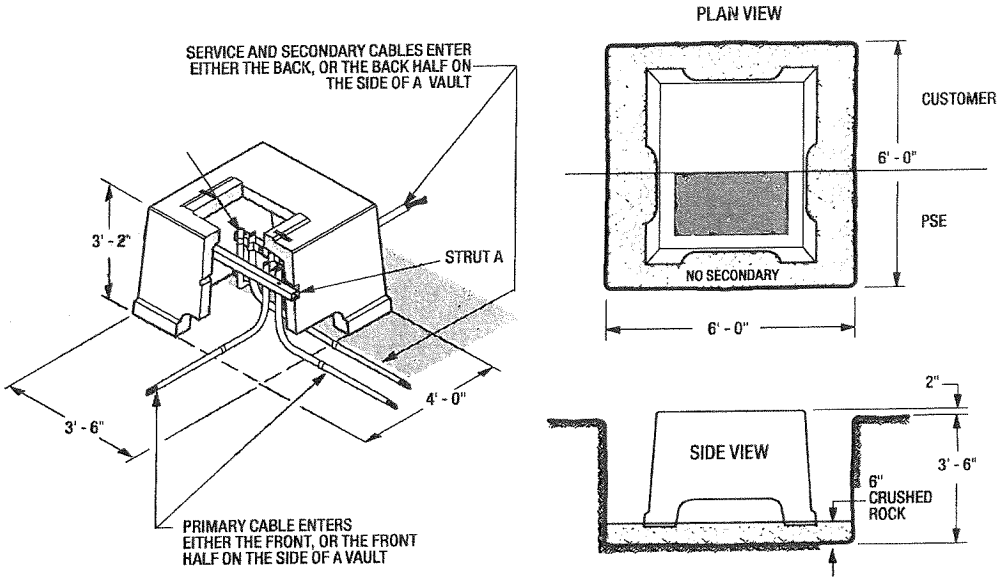

Figure 5 Minimum dimensions and excavation requirements for a three-phase padmount transformer vault, 300 kVA or less

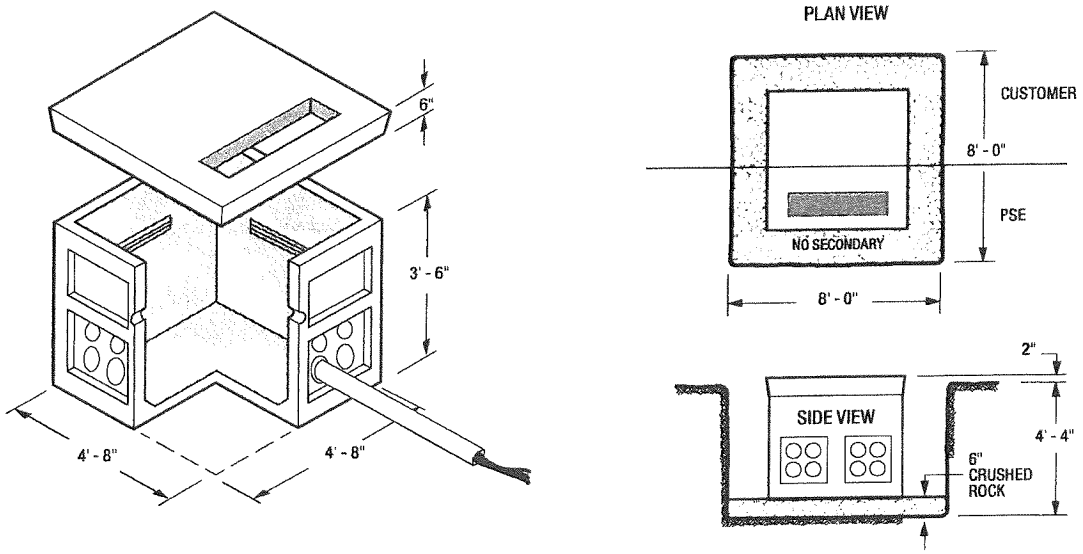

NOTE: Refer to Figure 2 for the location of customer conduit entering PSE vaults.

Attaching a customer's service line to a power pole

When the power pole is on private property

As a commercial customer, you may attach, own, and maintain up to two service conduit risers on a PSE power pole (see Figure 6), when the pole is located on private property. Three or more conduit service risers require an underground connection handhole (see Figure 7).

If no other risers exist on the pole, attach the first 10 feet of the conduit riser(s) in location 3 (see the plan view of Figure 6). For the location of other riser(s), contact your CCS Representative or your Project Manager for approval prior to installation.

NOTE: All installation work performed on the pole above 10 feet from grade shall be done by electric utility crews.

When the power pole is in a city/county/state right-of-way

When PSE's power pole is within a governmental right-of-way, PSE will install a secondary handhole on your property to provide a point of service (see Figure 7). Call CCS for coordination and guidance before attaching service conduits to PSE power poles within a governmental right-of-way.

Figure 6 PVC conduit riser placement when pole is on private property only

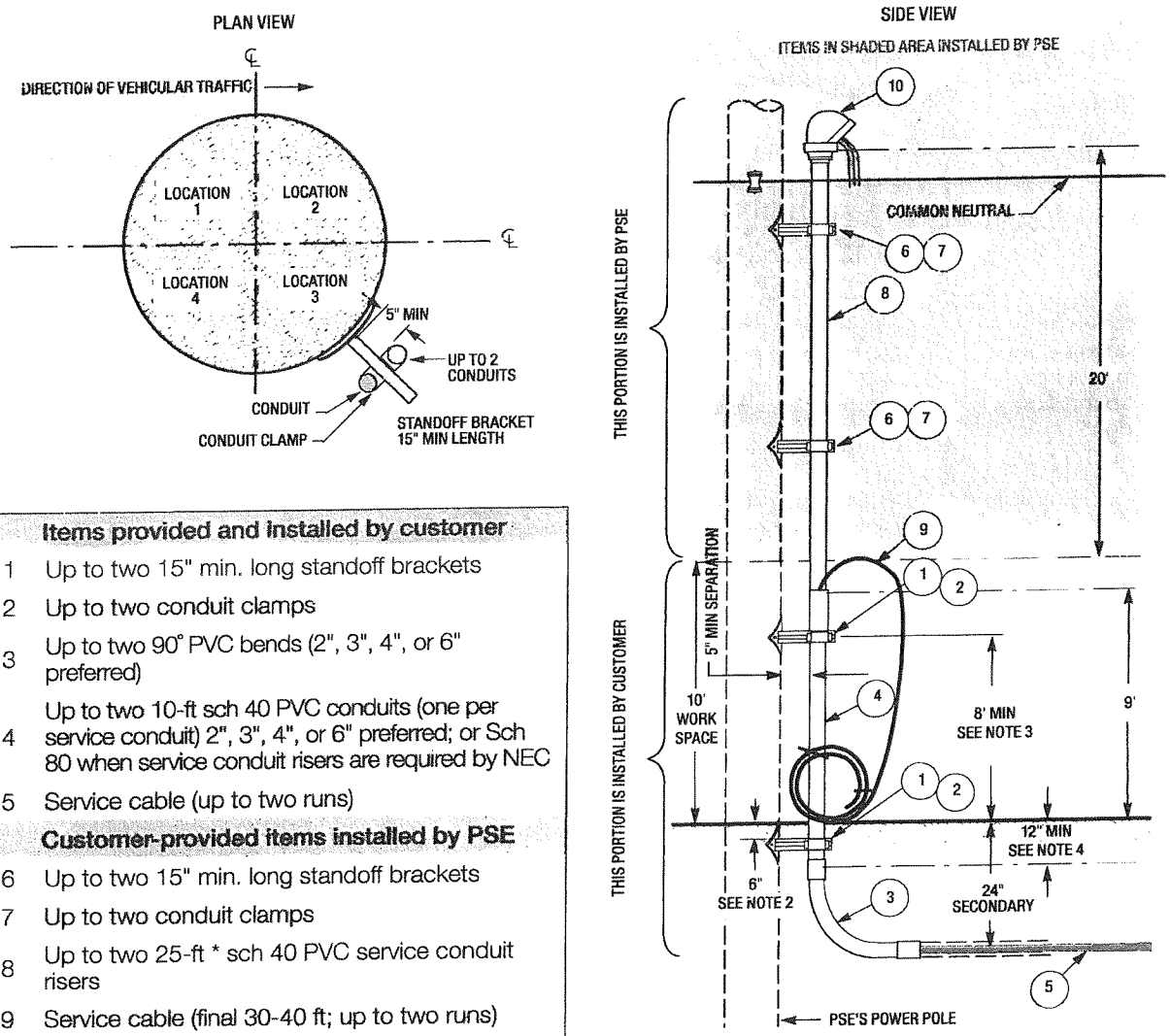

	Items provided and installed by customer
1	Up to two 15" min. long standoff brackets
2	Up to two conduit clamps
3	Up to two 90° PVC bends (2", 3", 4", or 6" preferred)
4	Up to two 10-ft sch 40 PVC conduits (one per service conduit) 2", 3", 4", or 6" preferred; or Sch 80 when service conduit risers are required by NEC
5	Service cable (up to two runs)
	Customer-provided items installed by PSE
6	Up to two 15" min. long standoff brackets
7	Up to two conduit clamps
8	Up to two 25-ft * sch 40 PVC service conduit risers
9	Service cable (final 30-40 ft; up to two runs)
10	Weatherhead

* 25 FT ASSUMES THE PSE POLE IS 45 FT OR SMALLER. LARGER POLES REQUIRE EXTRA CONDUIT

INSTALLATION NOTES:

1. All customer-provided material must be on-site for PSE to install.
2. The 1st customer-installed standoff bracket must be located 6 in. belowgrade on the pole.
3. The 2nd customer-installed standoff bracket must be located 8 ft. abovegrade on the pole.
4. Customer-installed conduit riser sections shall extend 12 in. belowgrade. The remaining abovegrade conduit risers shall be installed 9 ft. abovegrade.
5. Maintain 5 in. minimum separation between the pole and conduit risers.
6. Leave sufficient service cable (Item 9) coiled for PSE crew to install through the top 25 ft. riser section and complete connection to transformer(s).

Figure 7 PSE-installed underground connection handhole

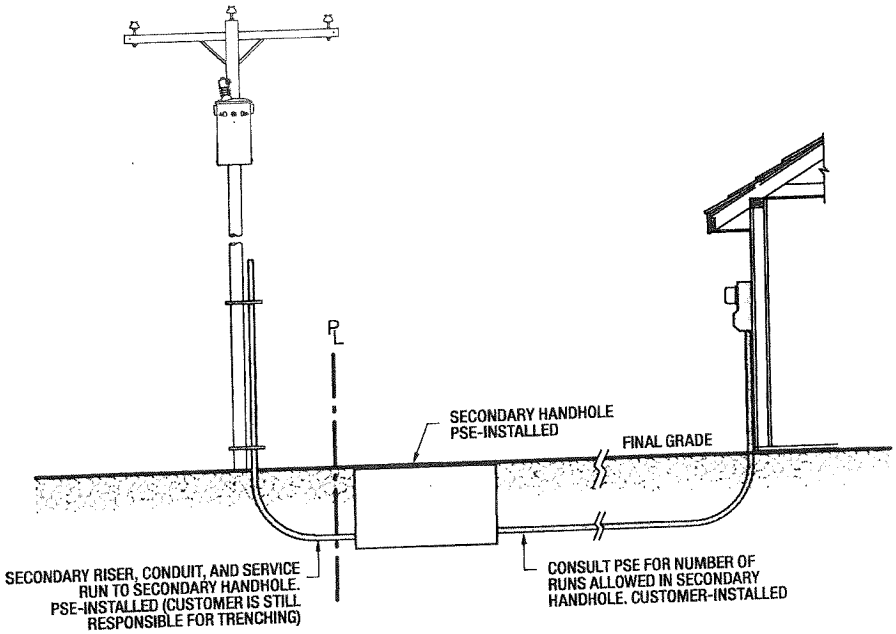

Racking of cable in vaults

The following applies to 7- x 7- x 6-foot vaults for three-phase padmount transformers of 500 kVA and greater, where 12 or more runs of 500 kcmil or larger cables are installed.

Cable ladder

In all 7- x 7- x 6-foot vaults, PSE would install or provide a 30-inch x 4-foot ladder with 6-inch spacing between rungs. The cable ladder will be positioned approximately 19 inches from the left side of the vault wall under the cable access hole.

Cable supports

Cable support racks and arms, that hold cables along the perimeter of the vault wall, are recommended but not required by PSE.

If cable supports are installed, they shall extend a maximum of 2 feet from the vault wall. The customer may install as many cable supports as they consider necessary.

Cable training and identification

The requirements for cable training and identification are shown below.

- The cable shall extend a minimum of 7 feet above the transformer pad.
- All cables shall be bundled together by phase.
- Cables shall be zip tied to the cable ladder rungs.
- The neutral conductor shall be positioned on the cable ladder (see Figure 9).
- The cable shall be marked with colored tape to indicate its phase. Color extruded, jacketed conductors are also acceptable for identification.

Figure 8 Minimum dimensions and excavation requirements for a three-phase padmount transformer vault, 500 kVA and larger

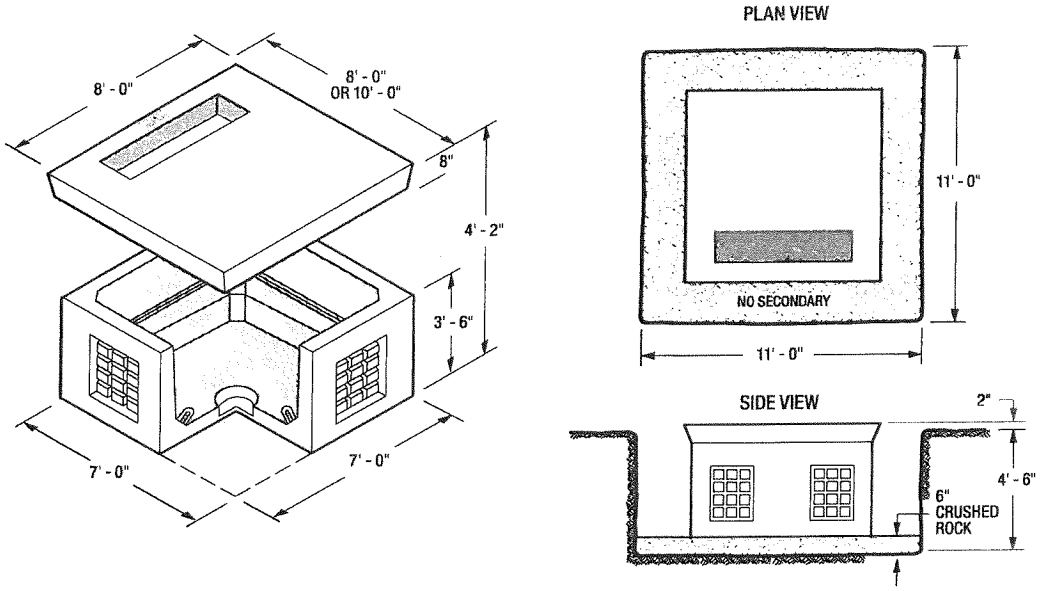

Figure 9 Racking of cable in vaults

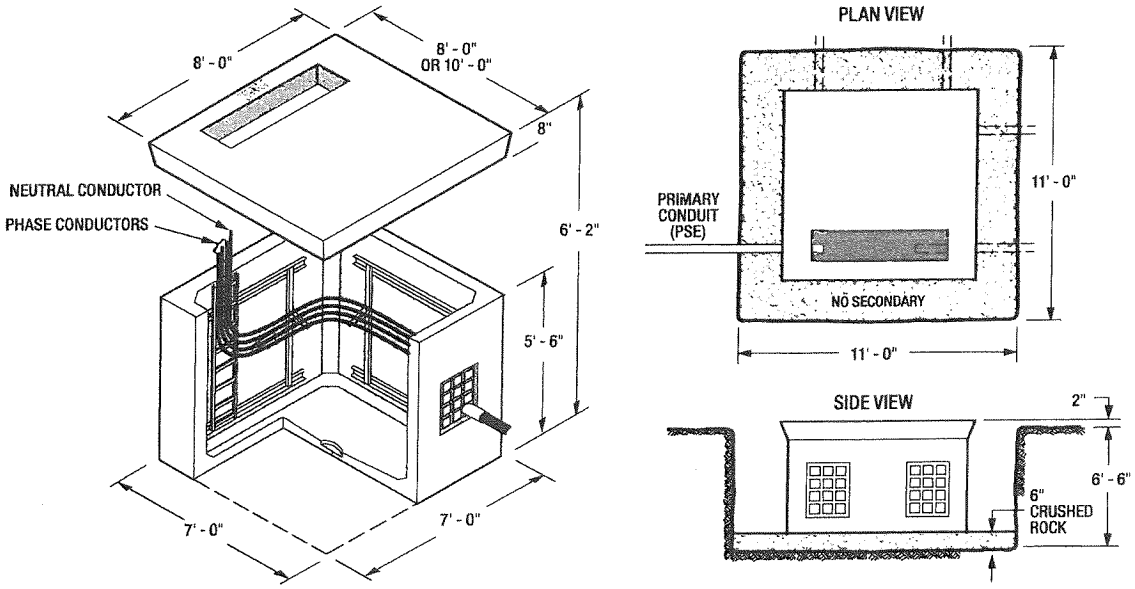

Customer wiring to energized PSE transformers

Excavating to expose existing buried primary voltage power

Before installing commercial service underground cable into any energized transformer, coordinate the work with PSE to ensure a safe installation.

Single-phase minipad transformers

Your electrician may insert conduit 2 inches into an energized minipad transformer. Routinely, PSE must uncover existing buried primary power cables in order to maintain, intercept and reroute, or cut new equipment into the circuit such as transformers or J-boxes. In these situations, the excavation taking place must be coordinated with the customer with respect to the hazards a buried energized line presents.

Customers preparing a trench up to a cable intercept point shall not uncover the cable ahead of the scheduled date for line work. Customers preparing a trench route to a cable intercept point must stop 3 feet from locate marks prior to the start of PSE line construction work.

The cable shall be isolated, tested, and grounded, by qualified electrical workers, rendering the cable de-energized. Only then may a customer proceed to expose PSE's cable through normal safe work and digging practices.

For single-phase padmount transformer vaults with unistrut construction, you may, at your discretion, provide a minimum 24-inch radius PVC bend for PSE to attach to the unistrut.

Work that involves inserting or pulling cable into the minipad handhole shall be done only:

- After the transformer has been de-energized.
- With the on-site assistance of a PSE journeyman.

To train the cable and mark the runs:

- Mark the cables and group them together.
- Label the conductors with the location and service address.
- Leave no more than 8 feet of cable coiled in the vault, neatly installed and taped together.

Three-phase padmount transformers

The customer's electrician may install and grout conduit into a vault wall or insert/pull cable into three-phase transformer vaults only:

- After the transformer has been de-energized.
- With the on-site assistance of a PSE journeyman.

To train the cable and mark the runs:

- Label each cable's phase and the neutrals.
- Depending on the entry wall and vault size, leave 20-30 feet of cable coiled in the vault. Contact your project manager for the exact cable footage.

Transformer locations

PSE will install padmount transformers using the clearances listed in Table 4 and shown in Figures 10 and 11.

Clearances between padmount transformers and structures must be measured from the metal portion of the transformer closest to the building or structure, including any building overhangs, within the following clearances:

Table 4 Clearances for padmount transformers

Feature	Clearance distance
Combustible walls or roof (including stucco).	10 feet (3 feet from a combustible wall if using a reduced flammability transformer). See Figure 10.
Noncombustible walls (including brick, concrete, steel, and stone), provided the side of the transformer facing the wall does not have doors. Materials that pass UBC Standard 2-1 or ASTM E136-79 are considered to be noncombustible.	3 feet. See Figure 10.
Fire sprinkler valves, standpipes, and fire hydrants.	6 feet. See Figure 11
Doors, windows, vents, fire escapes, and other building openings.	10 feet. See Figure 11.
The water's edge of a swimming pool or any body of water.	15 feet. See Figure 11.
Individual domestic and irrigation wells.	100 feet. See Figure 11.
Facilities used to dispense or store LP or hazardous liquids or fuels.	20 feet. See Figure 12. 10 feet. See Figure 12.
Gas service meter relief vents.	3 feet. See Figure 11.

Figure 10 Clearances for transformers from structures

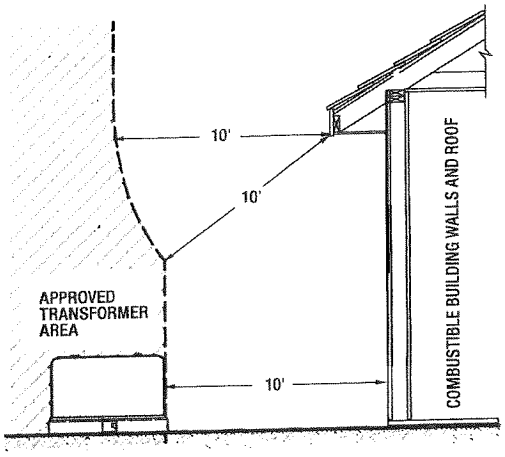

TRANSFORMER CLEARANCES FROM COMBUSTIBLE SURFACES

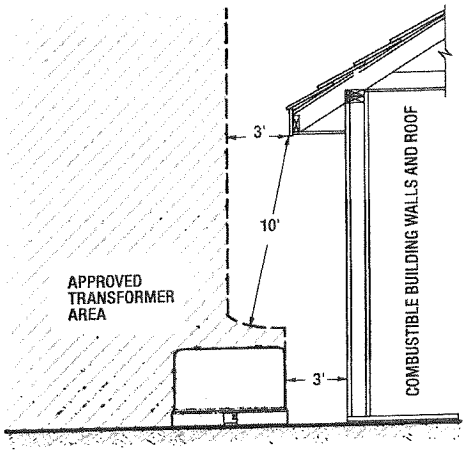

REDUCED FLAMMABILITY TRANSFORMER CLEARANCES FROM COMBUSTIBLE SURFACES

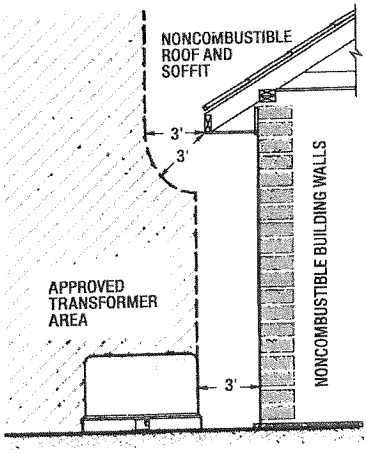

TRANSFORMER CLEARANCES FROM NONCOMBUSTIBLE SURFACES

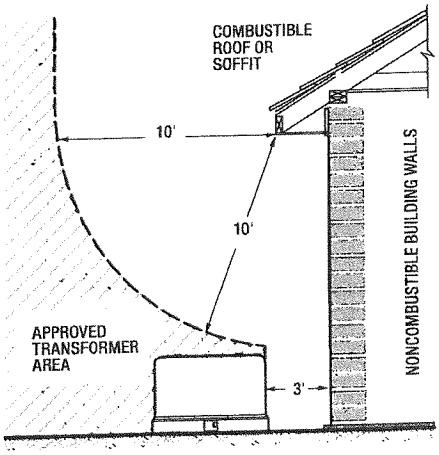

TRANSFORMER CLEARANCES FROM NONCOMBUSTIBLE WALLS WITH COMBUSTIBLE ROOFING

Figure 11 Clearances for transformers

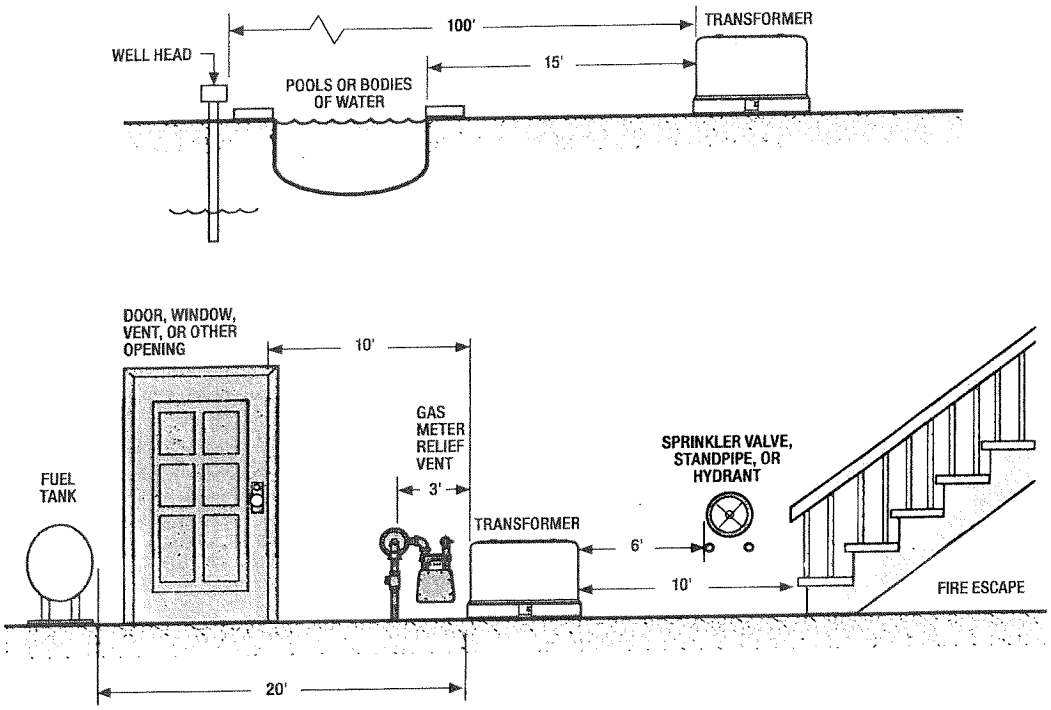

Figure 12 Minimum clearances from oil-filled equipment to LP, hazardous liquid, or fuel tanks

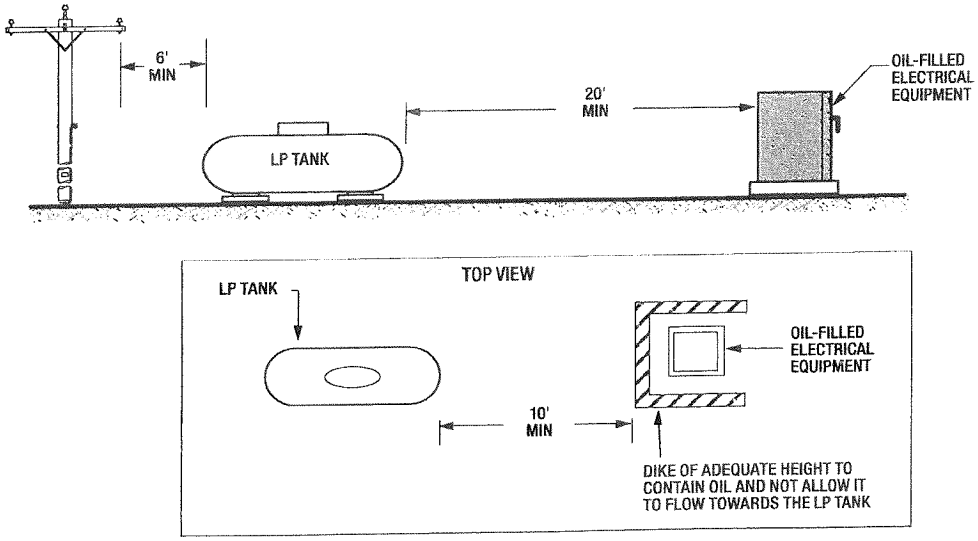

Landscaping and other obstacles

Landscaping and other obstructions shall not encroach on the clearances shown in Figures 13 and 14.

Working space

A clear and level working area equal to the full width of the equipment operating compartments shall extend a minimum of 10 feet from the compartment opening for padmount equipment and 10 feet in front of subsurface equipment in vaults (see Figures 13 and 14).

A minimum of 3 feet of clear working area for subsurface equipment and 18 inches for padmount equipment (see Figures 13 and 14) shall be provided on the sides of the electrical equipment without operating compartments (including sides with cooling fins).

A clearance of 36 inches is required on padmounted equipment with cooling fins (see Figure 14).

Figure 13 Plan view of subsurface equipment clear working space

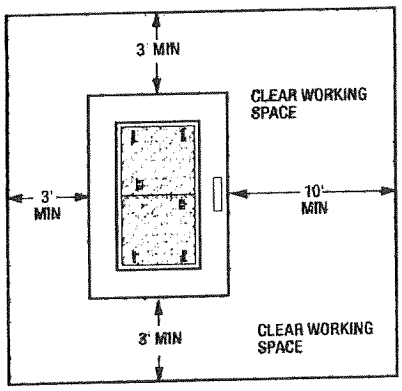

Figure 14 Plan view of padmount equipment clear working space

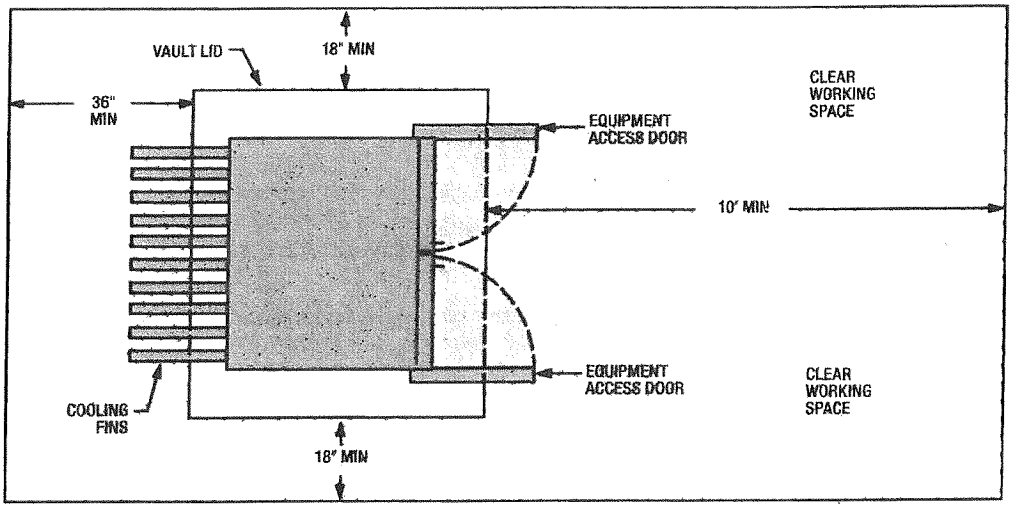

Guard posts for padmount and subsurface equipment

Washington Administrative Code (WAC) requires guard posts around padmounted equipment that is exposed to vehicular traffic. PSE guard post location requirements are shown in Figure 15. You are required to supply and install these guard posts or pay PSE to supply and install them.

Figure 15 Guard post location requirements

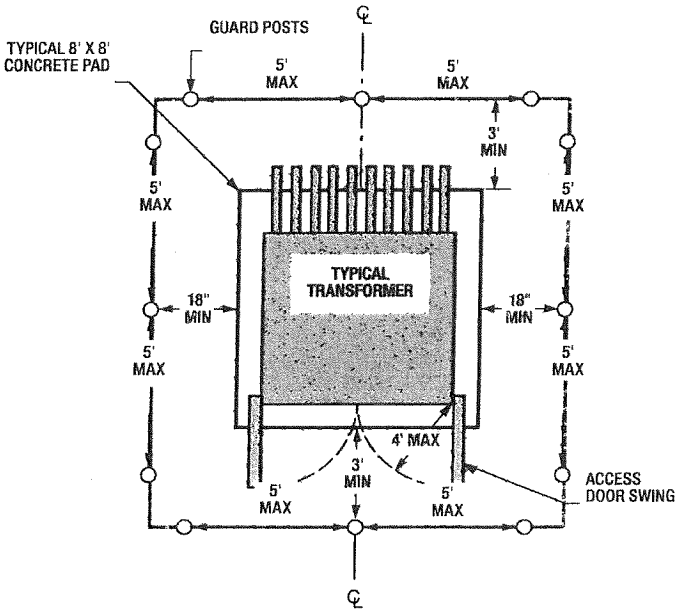

NOTE: Installation of guard posts must be completed before the primary cable is installed and energized.

Approved guard posts

The following styles of guard posts are approved for PSE transformers:

- Schedule 40 or better galvanized steel pipe filled with concrete, 6 feet x 4 inches in diameter. The concrete shall have a minimum compressive strength of 3,000 psi after 28 days. The exposed section of the post shall be painted traffic yellow.
- Precast steel-reinforced concrete post, 6 feet x 9 inches in diameter. These posts are available from Utility Vault Company, Auburn, WA; or Hanson Inc., Tacoma, WA. The exposed portion of the post shall be painted traffic yellow.
- Set the post 30 inches deep in undisturbed soil. If soil has been disturbed, use concrete to stabilize the post.
- Backfill the holes with concrete.

Figure 16 illustrates both styles of guard posts.

Figure 16 Typical guard posts